PHASE II EXCAVATION RESULTS AND INTERPRETATIONS

The description of results of the Phase II excavations at the Dairy Queen site will be organized by the following categories: stratigraphy and features, excavated artifacts, flotated artifacts and ecofacts, and activity areas. All artifacts recovered from all Phase I and II excavations are included in the results described below.

STRATIGRAPHY AND FEATURES

Figure 5 shows a north/south profile of the Dairy Queen site and Figure 6 shows an east/west profile. In both profiles a recent plowzone, which contained artifacts, is underlain by a series of yellow, brown, and orange silty and clayey sands, which also contained artifacts. The interfaces among the sub-plowzone soils are neither continuous, nor clearly defined and probably represent pedogenic horizons which have developed in situ over the past 10,000 years. Pebbles and gravels were common throughout the profiles (Table 2) and indicate that much of the sub-plowzone soils are derived from Pleistocene deposits.

Figure 5

North/South Site Profile

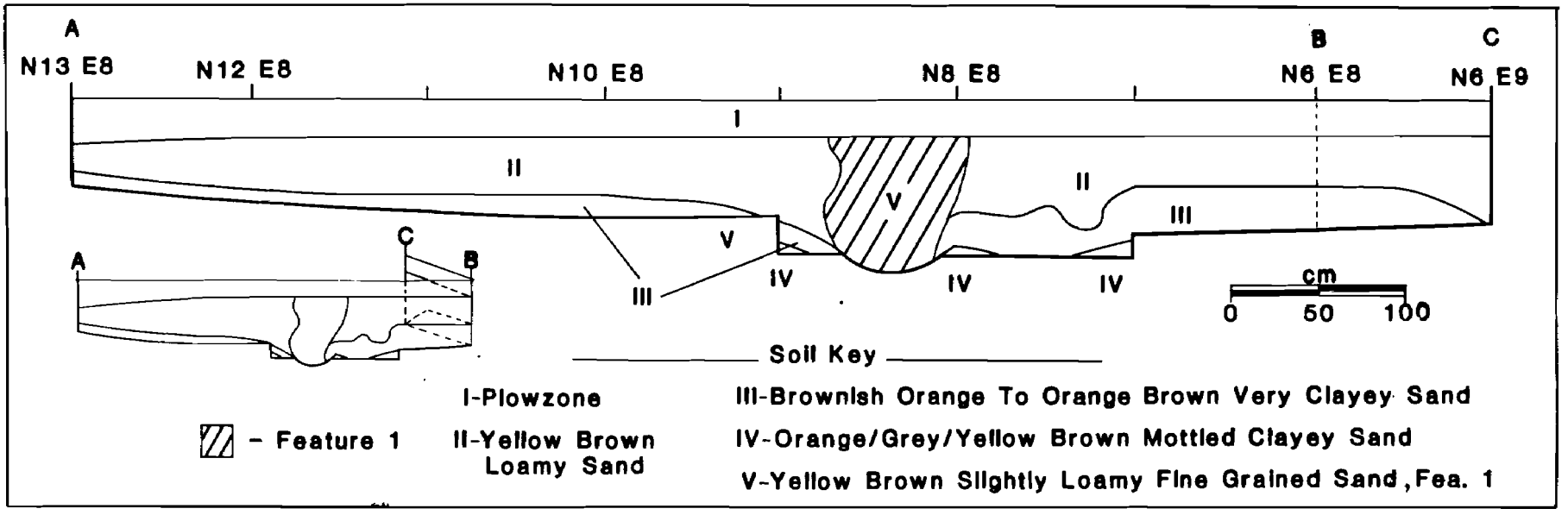

Figure 6

East/West Site Profile

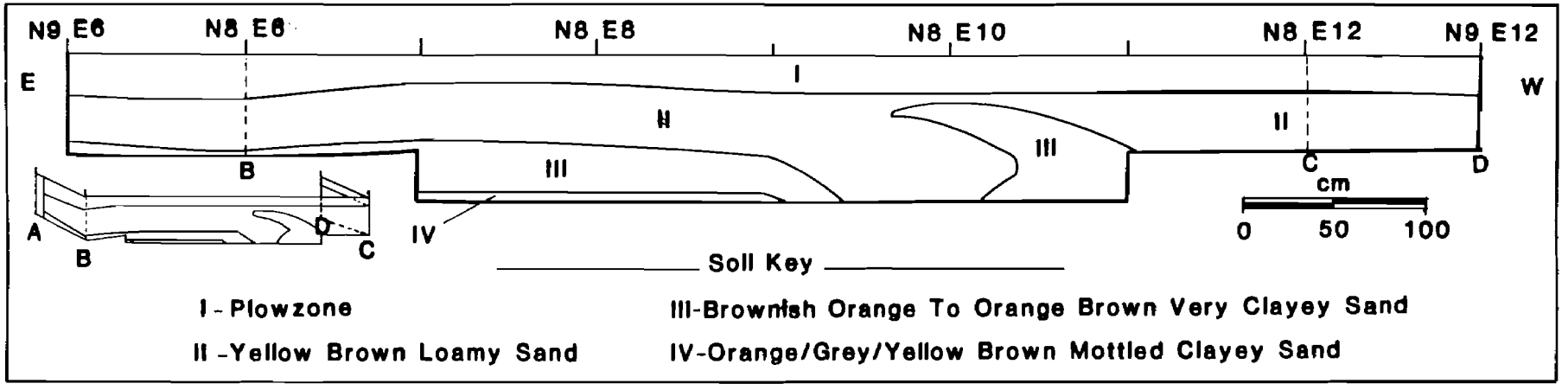

TABLE 2

SELECTED PEBBLE AND GRAVEL DISTRIBUTIONS

Square	Level	Gravel Weight	Square	Level	Gravel Weight
S10E5	2	756	N12E10	2	530
	3	1307		3	476
	4	542		4	620
	5	1106		5	78
	6	1674		6	800
	7	1752			
	8	1633	N8E12	2	498
	9	2946		3	785
	10	3718		4	755
				5	919
N8E6	2	794		6	1130
	3	769		7	800
	4	672			
	5	---	N8E8	2	834
	6	900		3	672
	7	855		4	730
	8	834		5	666
				6	818
N10E8	2	615		7	688
	3	730		8	812
	4	700		9	868
	5	821		10	958
	6	833		11	714
	7	868		12	604
	8	752		13	670
	9	672			

Note:
Gravel Weight is in grams

Table 3 shows the distribution of total artifacts at the site with depth and it can be seen that 86% of the artifacts are located in the plowzone or in the first 10cm of the subsoil. Table 4 shows the distribution of flakes of various raw materials in plowzone and subsoil contexts and the distributions are very similar. Likewise, Figures 7 and 8 show the similarities of the spatial distributions in plowzone and subsoil contexts. The similarities in artifact distributions and assemblages between

TABLE 3

SUMMARY OF TOTAL ARTIFACT COUNTS BY LEVEL

	Level 1	2	3	4	5	6	7	8	9	10	11	12	13	14	15
n	958	496	275	142	64	42	13	9	6	5	7	3	2	0	2
%	47	25	14	7	3	2	.6	.4	.2	.2	.3	.1	.1		.1

KEY: n = number
% = percent

TABLE 4

FLAKE COUNTS FROM PLOWZONE AND SUB-PLOWZONE CONTEXTS

	Jasper	Quartz	Chert	Quartzite	Other
PZ	736(12)	197(24)	13(3)	35(5)	2(0)
Subsoil	761(38)	214(36)	27(4)	43(9)	3(0)
Total	1497(50)	411(60)	40(7)	78(14)	5(0)
% Cortex	3%	14%	18%	18%	0%

the plowzone and the subsoil indicate that the artifacts are derived from a single deposit of artifacts that was buried within a thin Holocene soil which overlay a series of Pleistocene deposits. Because most of the artifacts are included in the plowzone and within the first 10cm of the subsoil, it is estimated that the Holocene deposits were less than 30cm thick. There is no way to determine the origin of the Holocene soils because of extensive disturbance by historic cultivation.

The artifacts found at depths more than 10cm below the bottom of the plowzone were located within a feature that was bisected by Test Unit 7. The feature was difficult to identify

Figure 7

Density Distribution of Total Artifacts – Plowone

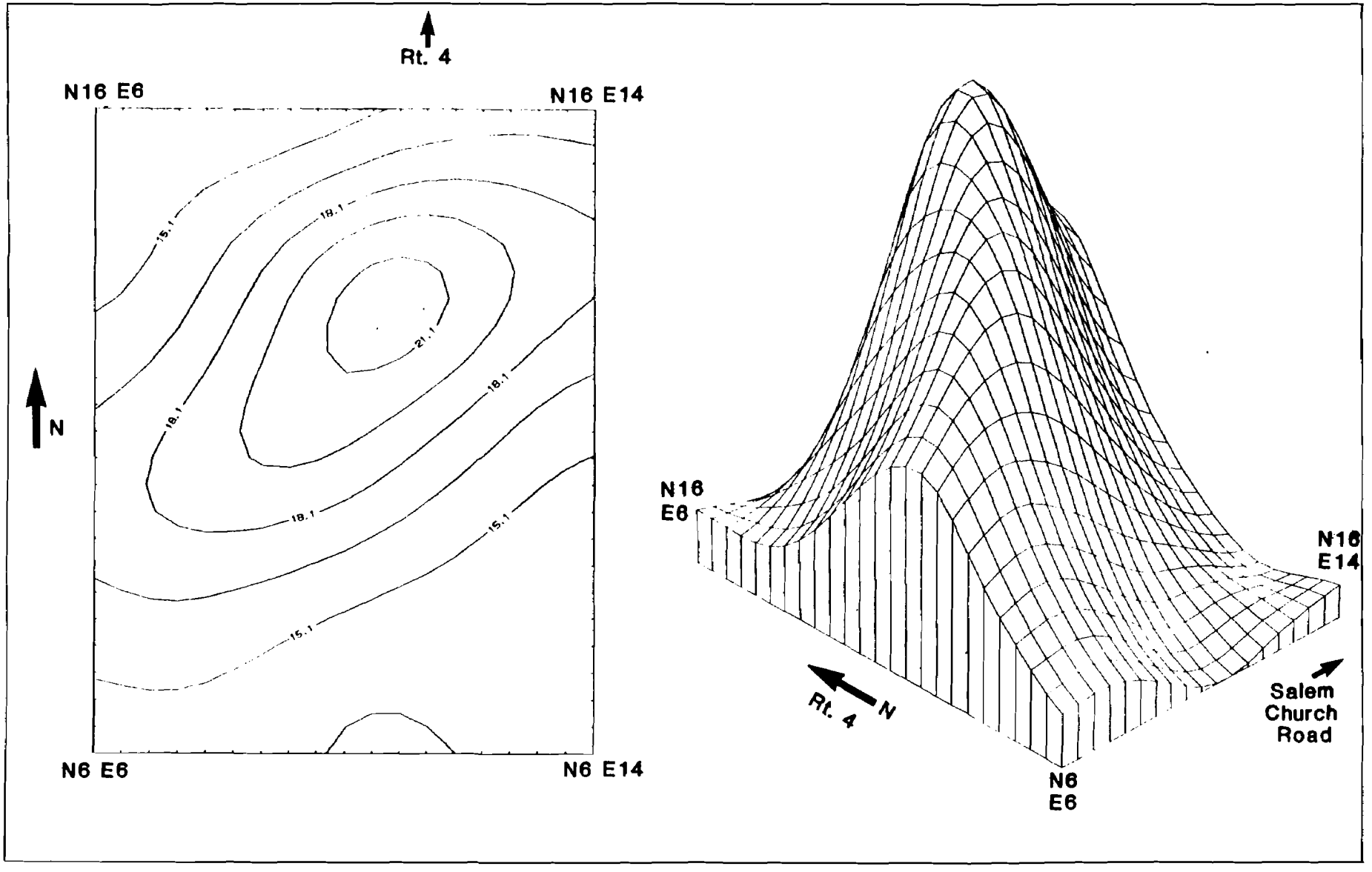

Figure 8

Density Distribution of Total Artifacts - Subsoil

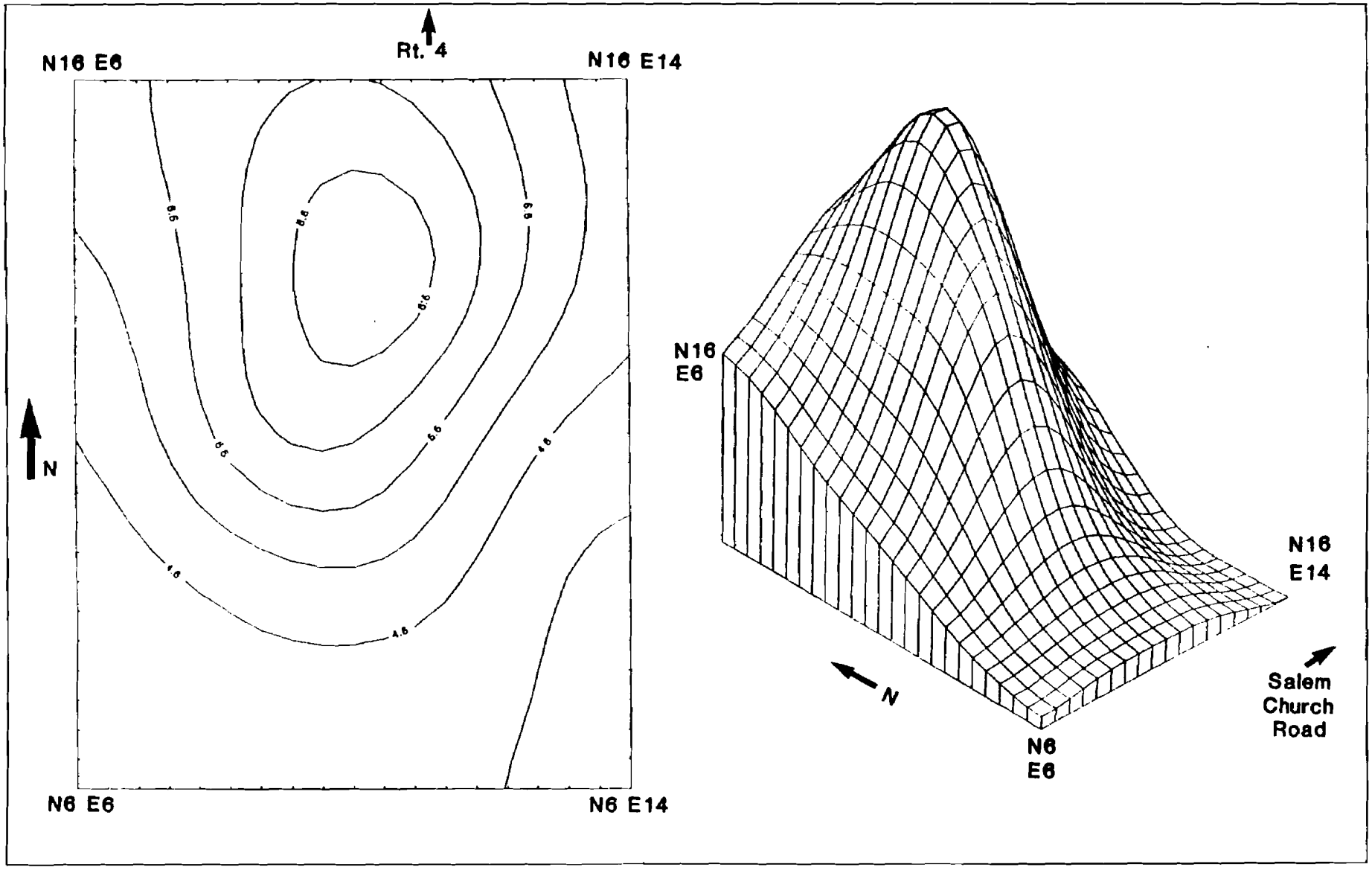

Figure 9

Feature 1 East Wall Profile

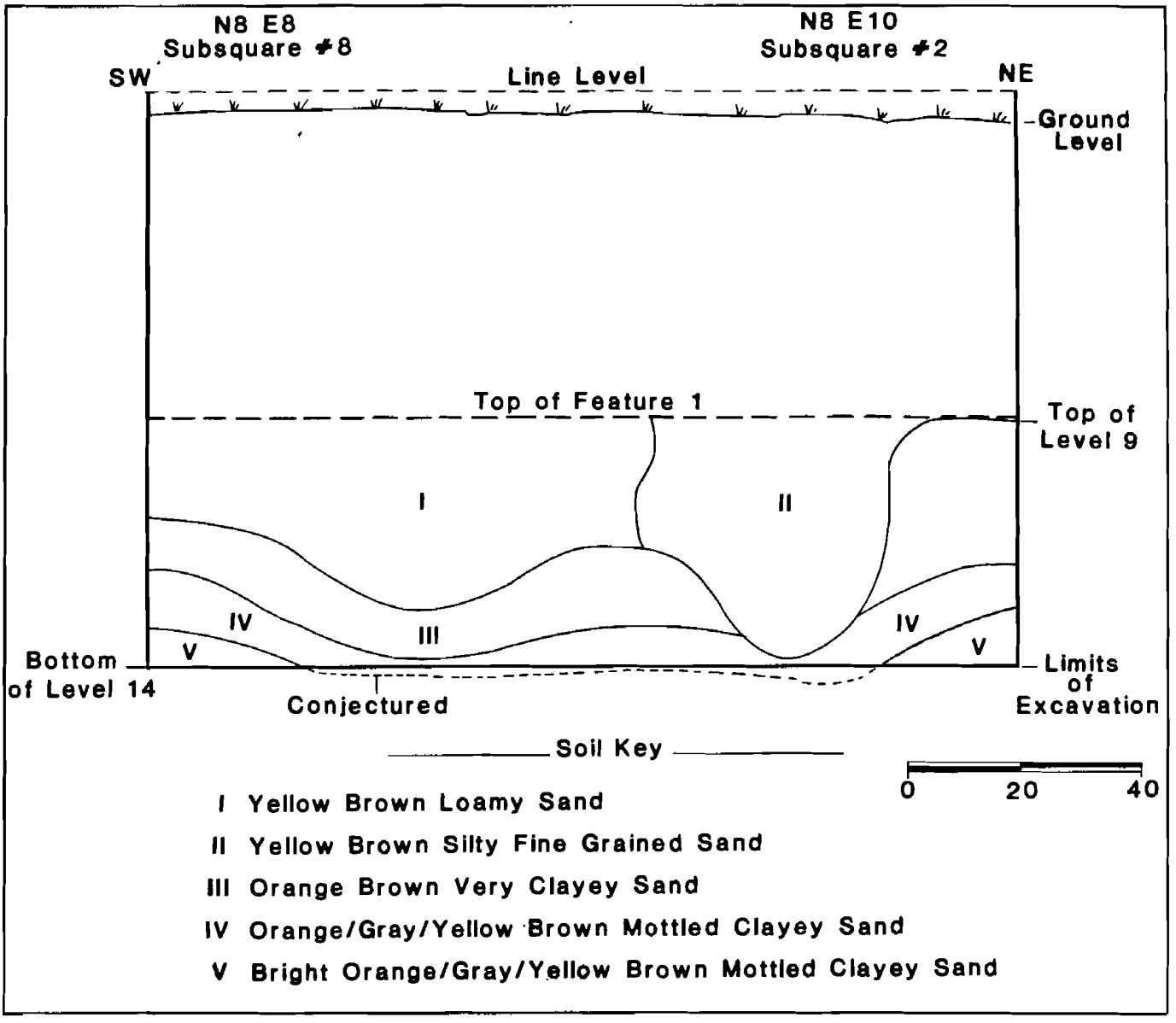

due to soil changes linked to soil profile development, and Figure 9 shows a cross-section of the feature. The feature is also identified as Horizon V in Figure 5. It was not possible to draw a planview because of the soil conditions and obliteration of the feature's edges by pedogenic development. The origin of the feature is not clear and it is not clear if the feature dates to the prehistoric occupation of the site, or if it dates to later historic ground disturbances. No historic artifacts were found in the feature fill; however, this does not preclude the possibility that it has a relatively recent origin.

In sum, the stratigraphy of the Dairy Queen site indicates that the artifacts at the site are located within the plow-disturbed remains of a thin Holocene soil whose depositional origin is unknown. Although some artifacts are in their original stratigraphic position, most of the site has been disturbed by cultivation. Nonetheless, this disturbance has not greatly altered the gross spatial distribution of the artifacts and the plowzone and subsoil spatial distributions are quite similar. Where artifacts were found in deep subsoil contexts, they were within the fill of a feature whose outlines had been extensively masked by pedogenic development. The origin and age of the feature are unclear.

EXCAVATED ARTIFACTS

Tables 4 and 5 show summary catalogues of the debitage and chipped stone tools found at the site. In addition to these artifacts, a hammerstone was recovered from the first 5cm level beneath the plowzone and a single sherd of Woodland II Minguannan

TABLE 5

TOOLS AND BIFACES

	Jasper	Quartz	Chert	Qtzte	Arg.	Other
Bifaces-ESBR	2	1	--	--	--	--
LSBR	3	3(2)	1	--	1	--
Frag.	--	--	1	--	--	--
Flake Tools	7	10(2)	1	1(1)	--	1
Points						
Tip Frag.	2	2	--	1	--	--
Stemmed Points	--	1	1	--	3	--
Other Frag.	--	--	--	1	--	--
Cores	1	--	--	--	--	--

KEY:
Qtzte - Quartzite
Arg. - Argillite
ESBR - Early Stage Biface Reject
LSBR - Late Stage Biface Reject

pottery was found in the plowzone. The projectile points from the site are all Woodland I stemmed varieties (Figure 10); however, none are sufficiently diagnostic to allow dating at the complex level. Thus, the most that can be said about the age of the occupations of the site is to note that it was occupied sometime during both the Woodland I (ca. 3000 B.C. - A.D. 1000) and Woodland II (ca. A.D. 1000 - 1600) time period with the bulk of the occupation during the Woodland I time period. It should be noted that the absence of Woodland I ceramics in the assemblage does <u>not</u> indicate a pre-1000 B.C. date for the Woodland I occupations because the site is small and of limited function (see below) and early ceramics are not likely to occur at these types of sites.

Figure 10

Points and Jasper Core

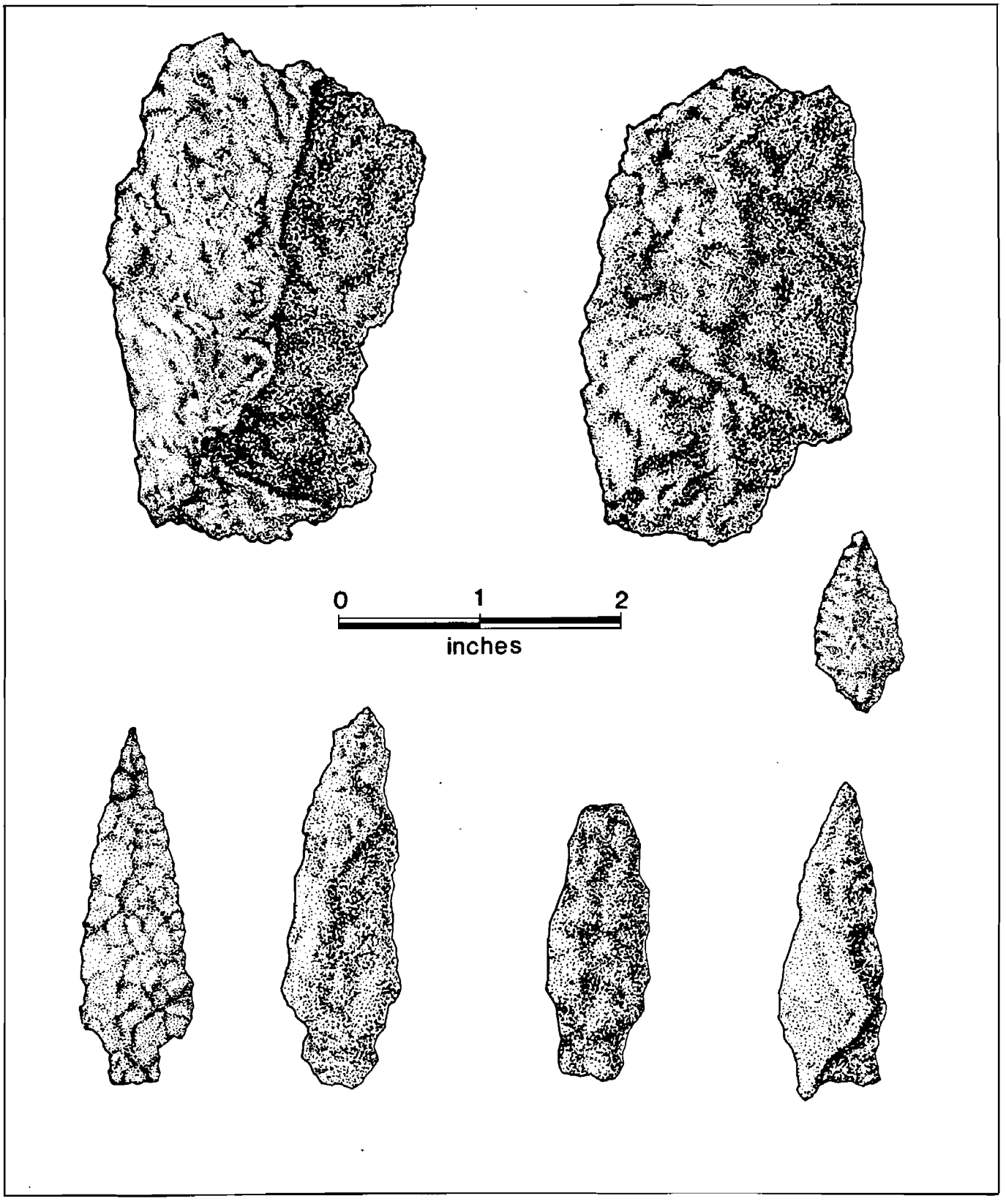

The projectile points and point fragments are interesting in that none show transverse fractures associated with cutting uses. One jasper tip fragment shows an impact fracture and the remainder of the fragments seem to have been broken during resharpening or final stages of manufacturing. Of the five complete points (Figure 10), three are made from argillite and weathering makes it impossible to ascertain wear; however, none of the argillite points show heavy edge damage or impact fracture. The remaining chert and quartz stemmed points show no apparent use wear, although limited distal polish is visible under 50x magnification on the chert point. The absence of pronounced use wear and the presence of one impact fracture and one incidence of distal wear indicate that the stemmed points probably all represent projectile points. The broken point fragments indicate that resharpening and perhaps final stages of manufacturing of projectile points took place at the site.

The bifaces from the site are relatively few in number and there are more than twice as many late stage bifaces as early stage bifaces (Table 5). The presence of cortex on 2 out of 3 late stage quartz bifaces indicates that some local quartz cobbles may have been reduced at the site. None of the jasper bifaces have cortex, even the early stage examples (Figure 11), and are probably not derived from cobble sources. All of the bifaces show manufacturing breaks and are classified as rejects rather than heavily used discards. An interesting component of the biface assemblage is thick stemmed bifaces broken during the final reduction stages (Figure 11-A, C, and E). Similar bifaces have been found at quarry reduction sites associated with the

Figure 11

Bifaces

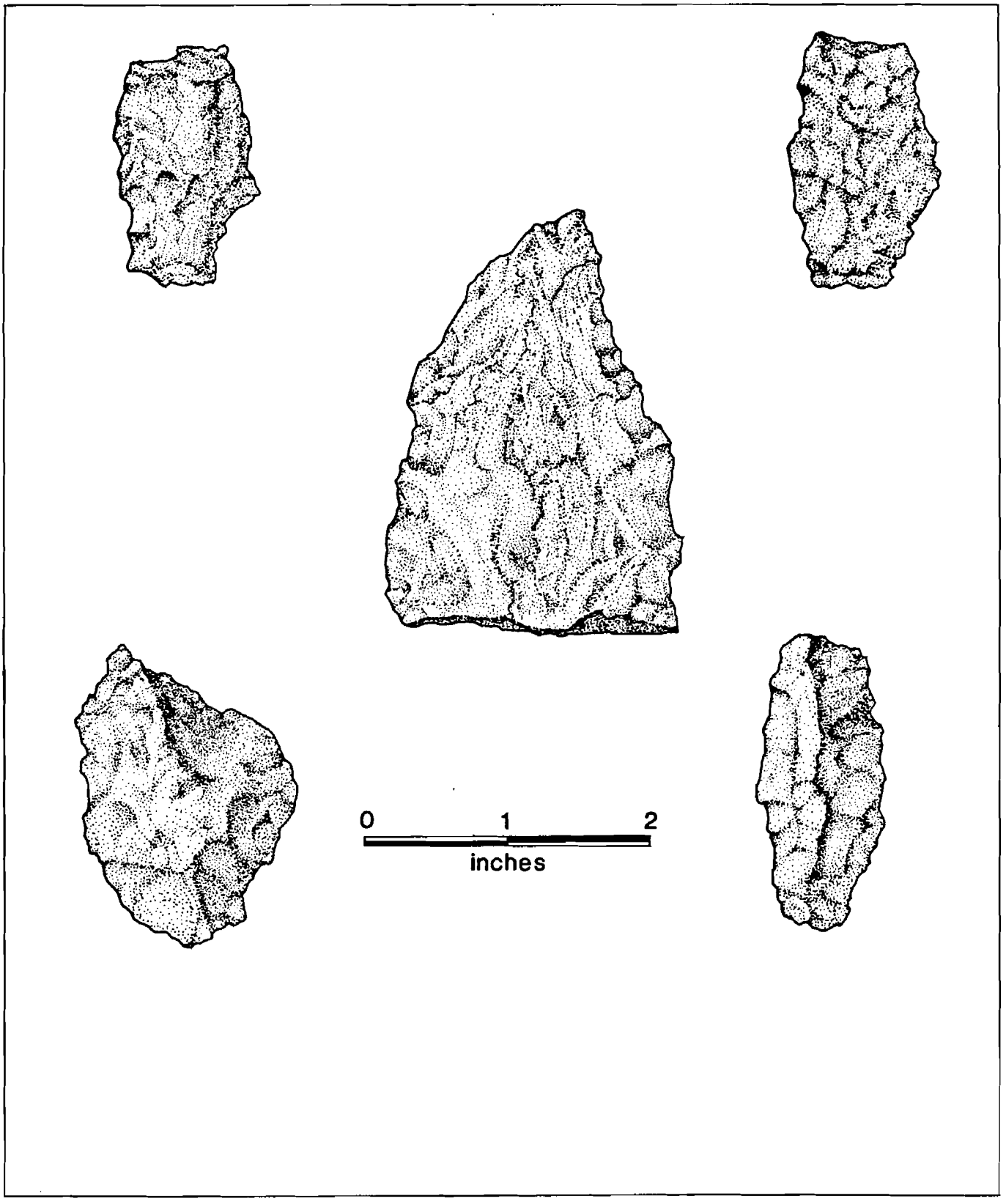

outcrops of the Delaware Chalcedony Complex (Custer, Ward, and Watson 1986) and these bifaces at the Dairy Queen site may have come from the Delaware Chalcedony Complex sources. In general, the biface assemblage from the Dairy Queen site shows limited biface reduction primarily focused on the later reduction stages. Some of the quartz bifaces may be derived from local cobble materials; however, the jasper and argillite were probably part of a tool kit transported to the site from elsewhere.

Modified flake tools represent less than 1% of the total debitage and consist primarily of moderately-sized flakes (approximately 2cm in the intermediate dimension) resharpened along one proximal edge. There are no examples of multiple resharpening or well-defined flake tool classes. When examined under 50x magnification, no easily identified use wear patterns were apparent. For the most part, the flake tool assemblage indicates expedient resharpening of flakes for generalized cutting activities with little or no preparation of specialized tools.

The debitage assemblage (Table 4) from the site is comprised of 74% jasper. Only 3% of the jasper debitage shows cortex indicating that it was derived from cores of primary materials rather than cobbles. Indeed, a large jasper core (Figure 10) was found at the site. This core is clearly not derived from a cobble and is probably manufactured from jasper derived from the nearby Delaware Chalcedony Complex outcrops. Although "eyeball" identifications of sources of cryptocrystalline lithic materials can be misleading, it can be noted that the core and much of the jasper debitage falls within the color and texture range of

Delaware Chalcedony Complex materials. Particularly interesting is the presence of numerous small magnetite inclusions in both the materials from the Dairy Queen site and the Delaware Chalcedony Complex raw materials. Based on these observations it is suggested that much of the site's debitage was produced from cores transported to the site and that the cores themselves were ultimately derived from the Delaware Chalcedony Complex. Because most of the flakes were derived from cores, and probably were not part of biface reduction, the bulk of the debitage assemblage is related to production of flakes for use as tools in their unmodified forms.

Quartz, quartzite, and chert comprise the remainder of the debitage assemblage and between 14% and 18% of the flakes from this material show evidence of cortex. Because some late stage bifaces of quartz with cortex were present, this debitage may be related to limited reduction of bifaces from local cobbles. Some reduction of cores derived from local cobbles is also likely. It is interesting to note that there is no argillite debitage even though argillite projectile points account for 25% of the projectile point assemblage.

All identifiable tools and a sample of general debitage were tested for the presence of blood residues using modified techniques from the work of Loy (1983). Over 90% of the artifacts showed a positive reaction, which was difficult to accept. Tests of the soil gave negative reactions; however, tests on 50 unmodified cobbles and pebbles also showed positive reactions (60%). This finding indicated contamination throughout the site that tended to concentrate on object surfaces. Testing

for organic peroxidase contamination proved negative indicating a non-organic, chemical oxidant as the contaminant. Positive reactions were located only on one tool surface indicating that the contamination was part of a pedogenic process. In sum, application of blood residue tests of tools seems to be misleading at the Dairy Queen site.

FLOTATED ARTIFACTS AND ECOFACTS

Flotation analysis was also carried out for several areas of the site and control units. Large numbers of uncharred seeds were found up to 20cm below the plowzone and only a very few charred specimens were present. There is no reason to suspect that the uncharred specimens are not modern contaminants because they were equally common in both samples from the site area and in control samples from outside the site. Given that the number of charred seeds was so low, it cannot be assumed that they are of prehistoric origin.

TABLE 6

DEBITAGE FROM FLOTATION

Square	Level	Raw Material			
		Jasper	Quartz	Chert	Quartzite
N8E8	2	--	2	--	--
	3	--	3	--	--
N8E10	2	3	1	--	--
	3	4	6	--	1
N12E8	2	36	9	1	1
	3	17	13	--	--
	4	5	2	--	--
N12E10	2	3	9	1	--
TOTAL		68	45	2	2

Table 6 shows a summary catalogue of debitage recovered from the heavy fraction of the flotation samples. As was the case with larger debitage, jasper is the most common raw material. Because small debitage is linked to tool resharpening, the large concentration of jasper micro-debitage at N12E8 indicates that tool resharpening probably took place in this area of the site.

ACTIVITY AREAS

The spatial distribution of total artifacts from sub-plowzone contexts is shown in Figure 8 and the distribution of debitage is shown in Figure 12. It can be seen that the debitage is concentrated in a single cluster approximately 5m long and 2m wide. The tight and limited clustering of the debitage indicates a limited number of occupations of the site. Figure 13 shows the relationship of the debitage cluster to tools and the previously described feature of uncertain origin. Also shown in Figure 13 is the location of a cluster of fire-cracked rock which probably represents a disturbed hearth. Another interesting find at the site was a large (approximately 10.5kg) rock found embedded in the subsoil with two fractured surfaces. A rock this size is surely not part of the same sedimentary processes which deposited the fine sands and silts of the site's soil matrix. No wear is apparent on the rock and it may have functioned as a seat or an anvil. Based on the distribution of debitage, features, and tools, it is suggested that there were two main activity areas at the site. One is a general processing area adjacent to and southwest of the disturbed hearth, characterized by low amounts of debitage and numerous flake

Figure 12

Density Distribution of Debitage - Subsoil

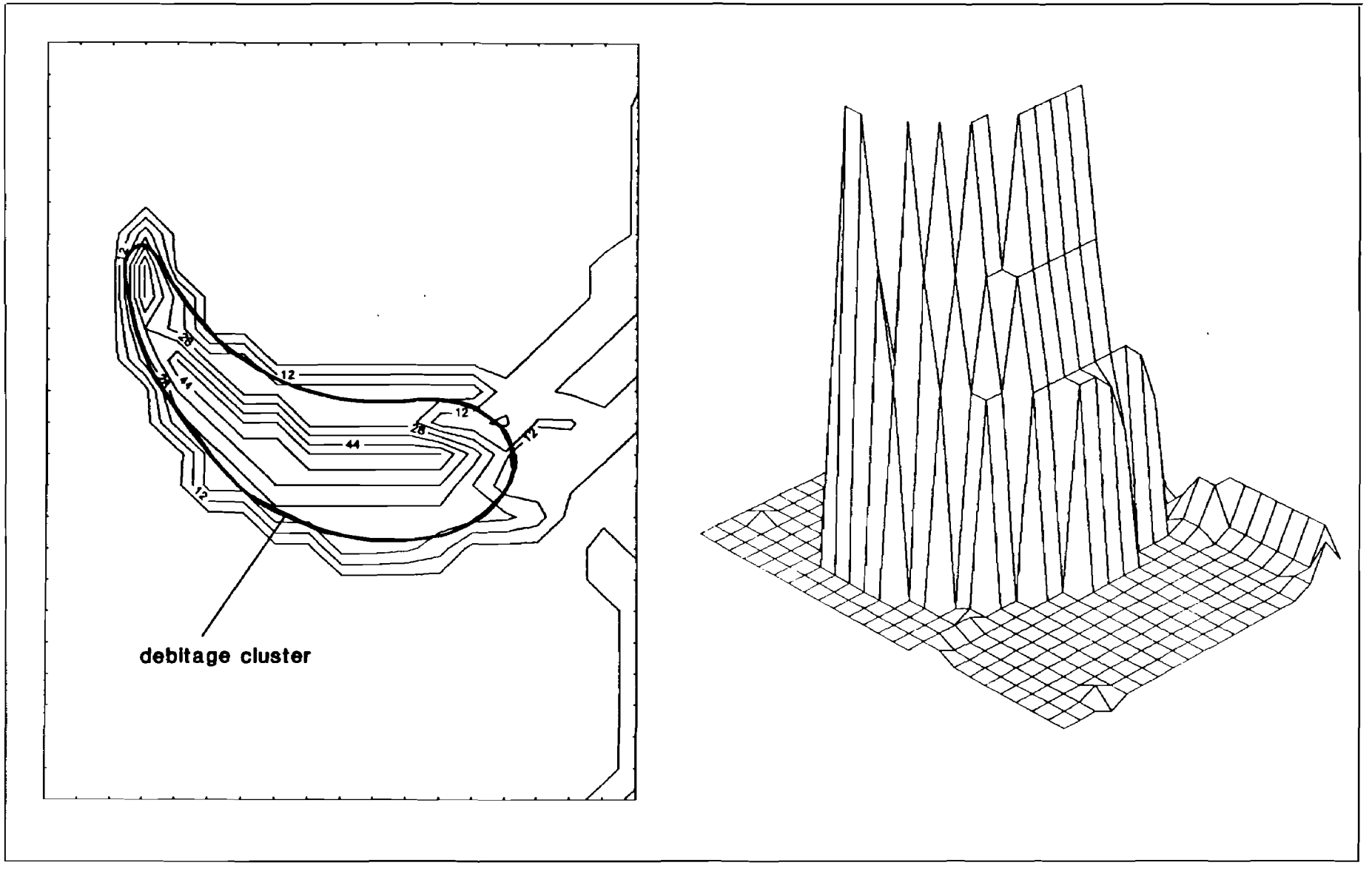

cutting tools. The second area is a flake production and tool resharpening area to the north of the disturbed hearth.