STORMWATER MANAGEMENT DETAILS

SCALE
0 40 80 120
FEET

SM FACILITY NO. 137

CONTRACT	COUNTY	F.A.P. NO.	SHEET NO.	TOTAL SHTS.
22-III-02	NEW CASTLE	SEE TITLE SHEET	73	174

AIRPORT ROAD / CHURCHMANS ROAD INTERSECTION IMPROVEMENTS

REVISIONS

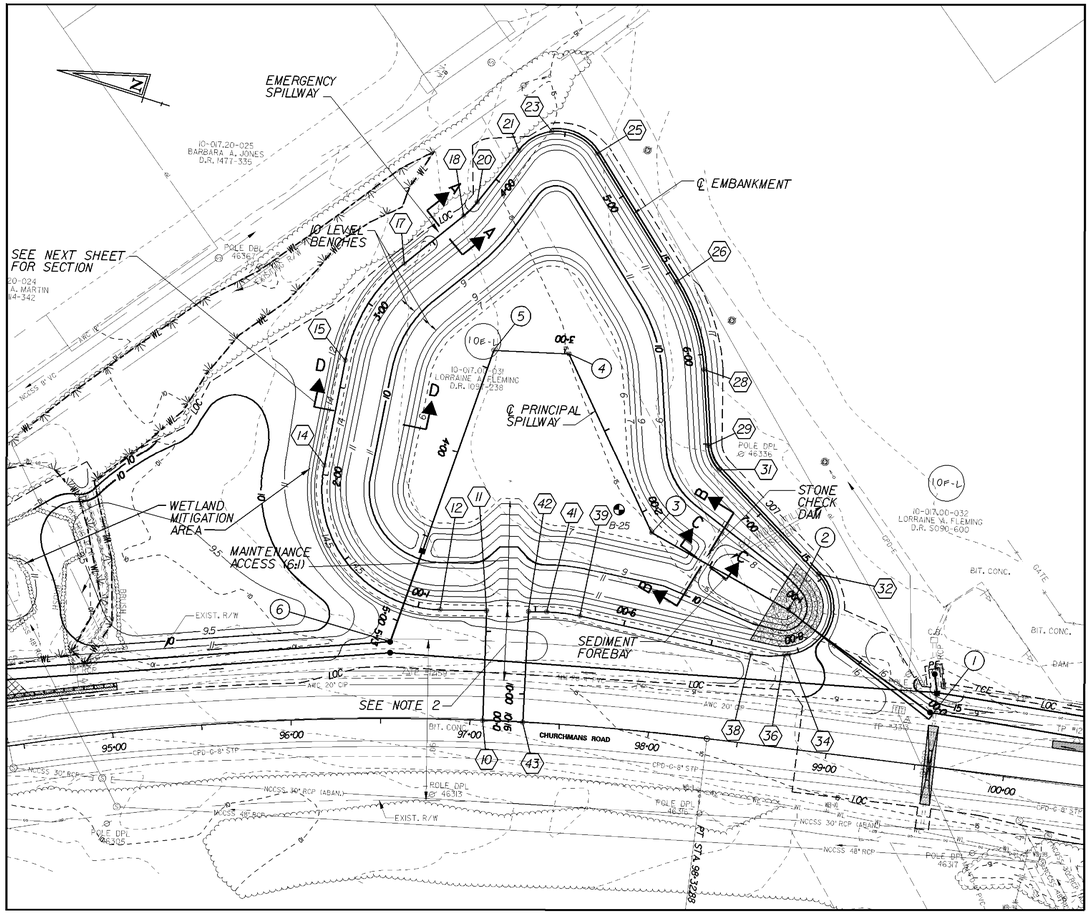

PLAN - BMP #1

POND DESIGN SUMMARY FOR BMP #1				
DESIGN STORM	FACILITY INFLOW	FACILITY DISCHARGE	WATER SURFACE ELEVATION	STORAGE VOLUME (AC.FT.)
QUALITY STORM (1½")	10.3	0.5	11.02	0.7804
2 - YEAR	39.4	18.3	11.73	1.4420
10 - YEAR	79.0	55.9	12.52	2.2101
100 - YEAR	123.4	84.1	13.37	3.0773

HAZARD CLASSIFICATION: CLASS A AS PER POND CODE 378

DRAINAGE AREA TO FACILITY: 25.77 ACRES

MANAGEMENT PROVIDED BY FACILITY: WATER QUALITY BY EXTENDED DETENTION FOR FIRST 0.5" OF RUNOFF WATER QUANTITY FOR 2, 10 AND 100 YEAR STORMS.

POND CONSTRUCTION SEQUENCE AND NOTES

THE STORMWATER MANAGEMENT POND SHALL FUNCTION AS A SEDIMENT BASIN DURING ROADWAY CONSTRUCTION AND SHALL BE CONSTRUCTED IN ACCORDANCE WITH THE FOLLOWING SECTIONS OF THE STANDARD SPECIFICATIONS:

SECTION 271 - STORMWATER MANAGEMENT POND
SECTION 272 - POND OUTLET STRUCTURE, CONCRETE
SECTION 274 - CLAY BORROW, STORMWATER MANAGEMENT POND

1. INSTALL STABILIZED CONSTRUCTION ENTRANCE.
2. CLEAR AND GRUB FOR INSTALLATION OF PERIMETER EROSION AND SEDIMENT CONTROLS.
3. INSTALL PERIMETER SEDIMENT CONTROLS AS SHOWN.
4. CLEAR AND GRUB REMAINING AREA FOR POND CONSTRUCTION.
5. CONSTRUCT POND OUTLET STRUCTURE, RIPRAP ENERGY DISSIPATOR AT END OF PRINCIPAL SPILLWAY AND PARTIAL EMBANKMENT AS NEEDED TO INSTALL POND OUTLET STRUCTURE. INSTALL SKIMMER DEWATERING DEVICE. DE-WATER FOUNDATION AS NEEDED IN ACCORDANCE WITH SECTION 110J3 AND USE SUMP PIT FOR PUMPING. (SEE STORMWATER MANAGEMENT DETAILS FOR SKIMMER DEWATERING DEVICE INSTALLATION).
6. EXCAVATE THE POND AND COMPLETE THE EMBANKMENT, EMERGENCY SPILLWAY AND BASIN TO LINES, GRADES AND DETAILS SHOWN IN THE CONSTRUCTION PLANS. DURING EXCAVATION, THE CONTRACTOR SHALL SALVAGE AND STOCKPILE SOILS CLASSIFIED AS CH, CL, CH AND GM PER THE UNIFIED SOIL CLASSIFICATION SYSTEM TO BE USED TO CONSTRUCT EMBANKMENT AND TO LINE THE POND. THE ABOVE CLASSIFIED SOILS MAY BE OBTAINED FROM ELSEWHERE WITHIN THE PROJECT LIMITS, IF NECESSARY. OVEREXCAVATE POND BOTTOM TO ELEVATION 6.0 AS SHOWN FOR SEDIMENT STORAGE DURING CONSTRUCTION.
7. STABILIZE ALL BARE AREAS.

NOTE: SEE CONSTRUCTION SEQUENCE PLANS FOR LOCATION OF EROSION AND SEDIMENT CONTROL MEASURES.

MAINTENANCE OF POND AS A SEDIMENT BASIN

1. CONTRACTOR SHALL INSPECT THE BASIN IMMEDIATELY AFTER EVERY RAIN AND MAKE REPAIRS AS NEEDED.
2. CONTRACTOR SHALL CLEARLY MARK THE CLEANOUT ELEVATION ON A STAKE DRIVEN INTO THE GROUND AT A LOCATION CLEARLY VISIBLE FROM THE EMBANKMENT. SEDIMENT SHALL BE REMOVED WHEN CLEANOUT ELEVATION IS REACHED AND DISPOSED OF AT A LOCATION APPROVED BY THE ENGINEER.

CONVERSION TO PERMANENT STORMWATER MANAGEMENT POND

1. CONVERT THE BASIN INTO THE PERMANENT STORMWATER MANAGEMENT POND AFTER ALL AREAS DRAINING TO THE POND HAVE BEEN PERMANENTLY STABILIZED AND THE ENGINEER HAS APPROVED THE CONVERSION.
2. REMOVE ACCUMULATED SEDIMENT TO ELEVATION 7.0 AND DISPOSE SEDIMENT AT A LOCATION APPROVED BY THE ENGINEER.
3. COMPLETE STABILIZATION OF ALL BARE AREAS. REMOVE EROSION AND SEDIMENT CONTROL MEASURES AND DEACTIVATE SKIMMER DEWATER DEVICE.

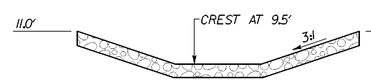

SECTION B–B
SCALE: NONE

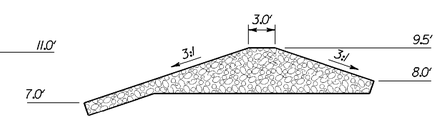

SECTION C–C
SCALE: NONE

STONE CHECK DAM

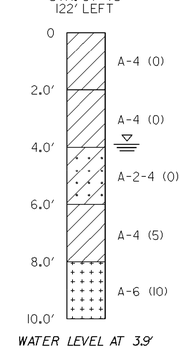

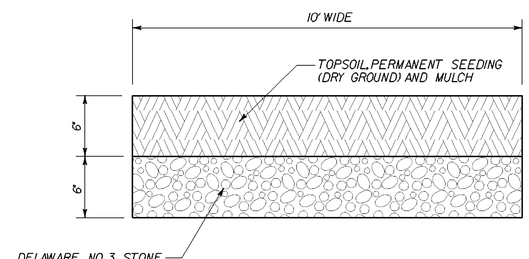

POND MAINTENANCE ACCESS
SCALE: NONE

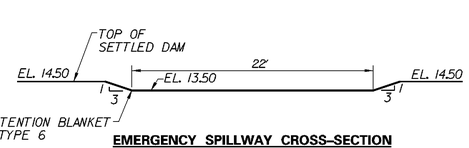

EMERGENCY SPILLWAY CROSS-SECTION
SCALE: NONE

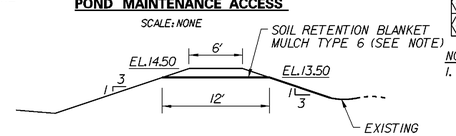

SECTION A–A
SCALE: NONE

NOTE:
EXTEND SRBM TYPE 6 DOWN SPILLWAY SLOPE AND KEY INTO EXISTING GROUND.

℄ PRINCIPAL SPILLWAY

	STATION	NORTHING	EASTING
1	POB STA. 0+00.00	612446.6894	596305.7519
2	PI STA. 0+99.31	612539.7864	596340.3191
3	PI STA. 1+87.35	612625.9074	596358.5942
4	PI STA. 2+97.39	612700.1214	596439.8496
5	PI STA. 3+39.60	612740.9307	596429.0873
6	POE STA. 5+12.71	612746.8708	596256.0717

℄ POND EMBANKMENT

	STATION	NORTHING	EASTING
10	POB STA. 0+00.00	612684.3389	596229.7211
11	PI STA. 0+61.46	612700.7524	596288.9519
12	PC STA. 0+87.44	612725.6759	596281.6355
	PI STA. 1+67.98	612802.9571	596258.9584
14	PT STA. 2+05.33	612811.7756	596339.0138
15	PC STA. 2+65.38	612818.3509	596398.7044
	PI STA. 2+99.02	612822.0342	596432.1416
17	PT STA. 3+29.91	612803.3776	596460.1334
18	PC STA. 3+72.44	612779.7880	596495.5267
	PI STA. 3+77.94	612776.7363	596500.1055
20	PT STA. 3+83.40	612774.7533	596505.2384
21	PC STA. 4+20.56	612761.3621	596539.9010
	PI STA. 4+32.16	612757.6055	596550.8762
23	PCC STA. 4+42.43	612746.9936	596555.5616
	PI STA. 4+59.17	612731.6843	596562.3210
25	PT STA. 4+72.28	612719.0012	596551.4028
26	PC STA. 5+56.62	612655.0851	596496.3802
	PI STA. 5+83.12	612635.0019	596479.0915
28	PT STA. 6+08.53	612625.5842	596454.3217
29	PC STA. 6+51.57	612610.4331	596414.4728
	PI STA. 6+59.04	612607.6335	596407.1093
31	PT STA. 6+66.26	612600.7392	596403.2978
32	PC STA. 7+46.86	612530.1986	596364.2989
	PI STA. 8+00.27	612483.4607	596338.4594
34	PRC STA. 8+05.70	612532.3072	596316.8693
	PI STA. 8+06.98	612533.4711	596316.3548
36	PRC STA. 8+08.25	612534.6074	596315.7818
	PI STA. 8+17.81	612543.1439	596311.4770
38	PT STA. 8+27.14	612552.6864	596310.6251
39	PI STA. 9+24.96	612650.0993	596301.9095
	PI STA. 9+34.37	612659.4663	596301.0716
41	PT STA. 9+43.71	612668.4900	596298.4227
42	PI STA. 9+53.87	612678.2395	596295.5606
43	POE STA. 10+15.88	612662.6217	596235.5560

NOTES:

1. THE POND BETWEEN ELEVATIONS 9.0 AND 12.0 SHALL RECEIVE PERMANENT SEEDING, WET GROUND (ITEM 734015). THE REMAINDER OF THE EMBANKMENT AREA SHALL RECEIVE TOPSOILING, 6" DEPTH (ITEM 733002) AND PERMANENT SEEDING, DRY GROUND (ITEM 734013).
2. POND MAINTENANCE ACCESS SECTION SHALL BE CONSTRUCTED WITHIN GRADED LIMITS OF POND EMBANKMENT AND EXTENDED TO EDGE OF EXISTING SHOULDER ALONG CHURCHMANS ROAD.

PRELI. TRACING ____ J.A.D. ____ DESIGN ____ R.R.W./K.M.F. ____ CHKD. ____ J.M.P.

CONTRACT	COUNTY	F.A.P. NO.	SHEET NO.	TOTAL SHTS.
22-III-02	NEW CASTLE	SEE TITLE SHEET	74	174

AIRPORT ROAD / CHURCHMANS ROAD INTERSECTION IMPROVEMENTS

REVISIONS

STORMWATER MANAGEMENT DETAILS

SCALE
0 40 80 120
FEET

SM FACILITY NO. 137

NOTES:

1. COST FOR ANTI-SEEP COLLAR SHALL BE MADE INCIDENTAL TO ITEM 272000 - POND OUTLET STRUCTURE, CONCRETE #1.
2. 12" CLAY LINER TO BE PLACED IN AREAS WHERE EMBANKMENT IS CONSTRUCTED IN FILL AS SHOWN. LIMITS EXTEND FROM STA. 0+60.5 TO STA. 3+68.3 AND FROM STA. 7+95.8 TO STA. 7+95.8 TO STA. 9+54.7 ON EMBANKMENT PROFILE.

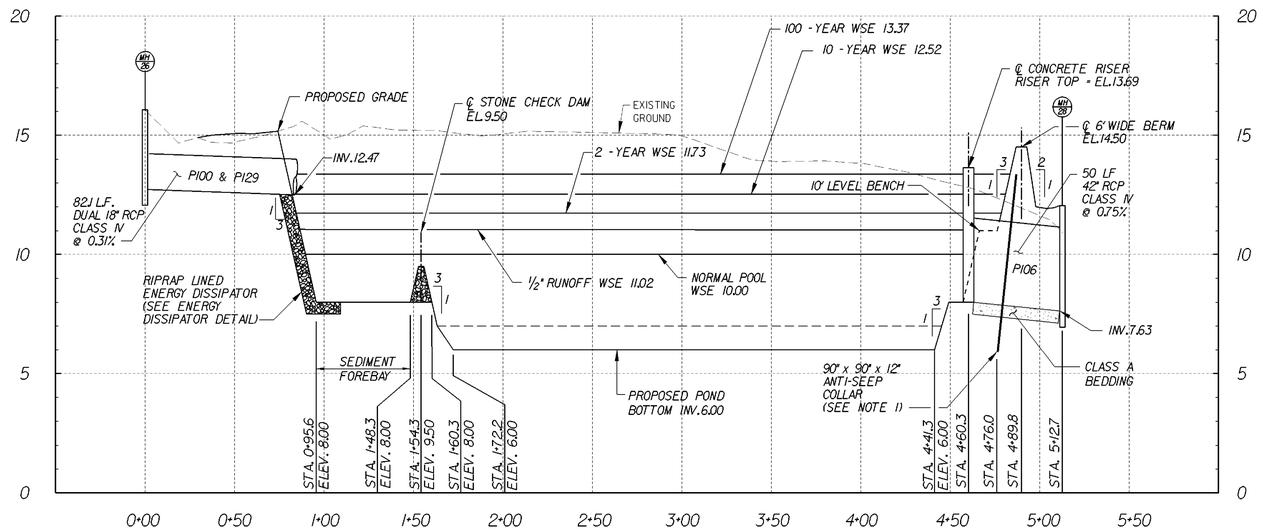

SPILLWAY PROFILE FOR BMP #1, SWM FACILITY NO. 137

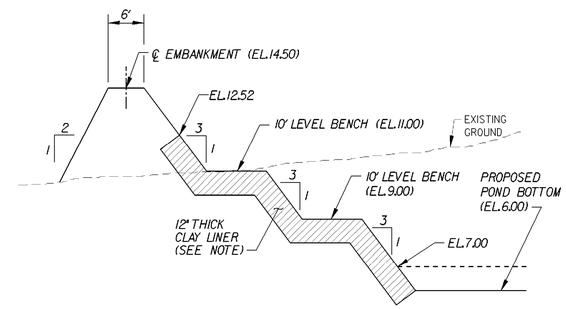

SECTION D-D FROM PREVIOUS SHEET

SCALE: NONE

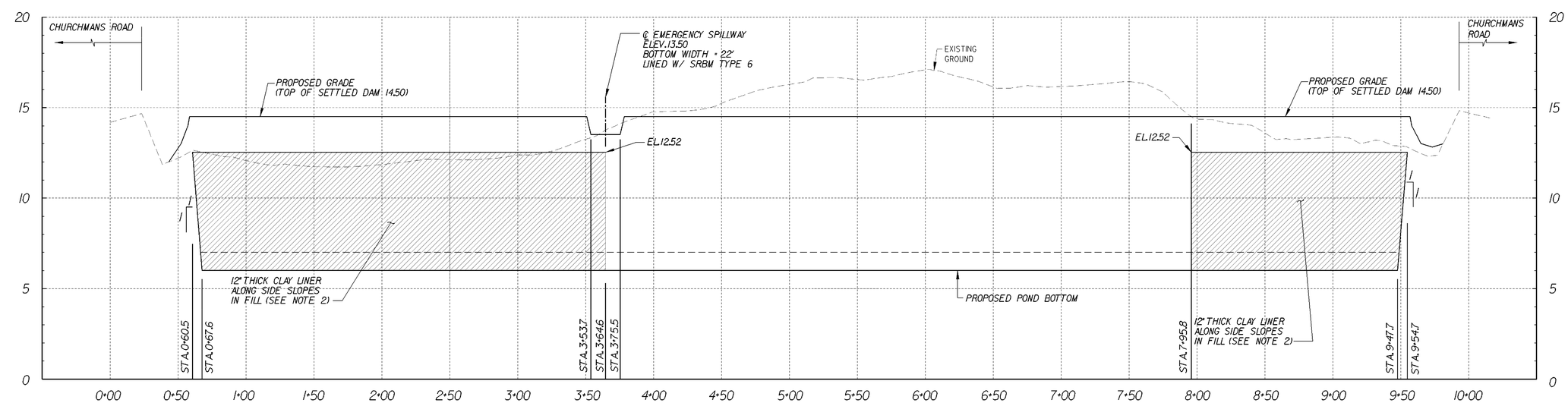

EMBANKMENT PROFILE FOR BMP #1, SWM FACILITY NO. 137

PREL. TRACING ____ J.A.D. ____ DESIGN ____ R.R.W./R.M.F. ____ CHKD. ____ J.M.P.

8/27/2004

M:\3128407\sw06dtrp.pdf

CONTRACT	COUNTY	F.A.P. NO.	SHEET NO.	TOTAL SHTS.
22-III-02	NEW CASTLE	SEE TITLE SHEET	75	174

AIRPORT ROAD / CHURCHMANS ROAD INTERSECTION IMPROVEMENTS

REVISIONS

STORMWATER MANAGEMENT DETAILS

SCALE: AS SHOWN

SM FACILITY NO. 137

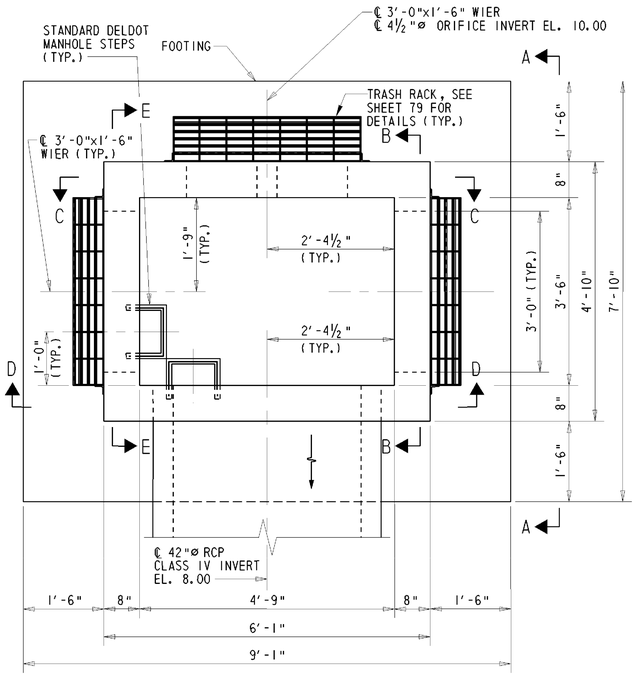

SWM RISER 137 - PLAN

NOT TO SCALE

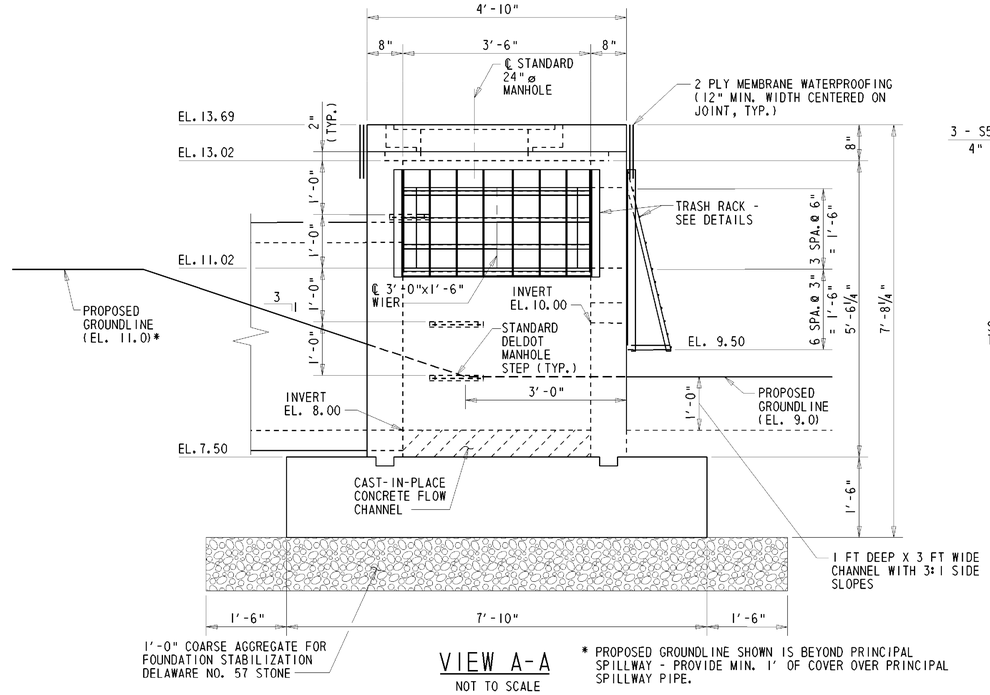

VIEW A-A

NOT TO SCALE

* PROPOSED GROUNDLINE SHOWN IS BEYOND PRINCIPAL SPILLWAY - PROVIDE MIN. 1' OF COVER OVER PRINCIPAL SPILLWAY PIPE.

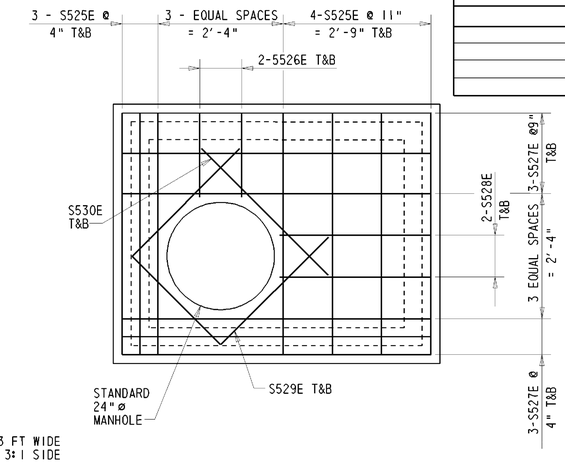

TOP SLAB - REINFORCEMENT PLAN

NOT TO SCALE

NOTES:

1. SEE REINFORCING BAR LIST ON SHEET 79 FOR REINFORCING BAR DETAILS.
2. SEE STANDARD CONSTRUCTION DETAILS FOR MANHOLE FRAME AND COVER DETAILS.
3. SEE STANDARD CONSTRUCTION DETAILS FOR MANHOLE STEP DETAILS.
4. TOP SLAB, TRASH RACKS AND MANHOLE STEPS NOT SHOWN IN SECTION VIEWS FOR CLARITY.
5. E.F. = EACH FACE
   F.F. = FRONT FACE
   R.F. = REAR FACE
   T&B = TOP AND BOTTOM
6. SEE SHEET 78 FOR CORNER REINFORCEMENT DETAIL.
7. SEE SHEET 78 FOR KEY DETAILS.

SKIMMER DEWATERING NOTES:

1. WHILE SM FACILITY NO. 137 IS FUNCTIONING AS A SEDIMENT BASIN, ALL OPENINGS OF RISER STRUCTURE EXCEPT 4½"ø ORIFICE SHALL BE BLOCKED OFF IN A WATERTIGHT FASHION. COST INCIDENTAL TO ITEM 272001 - POND OUTLET STRUCTURE, CONCRETE #2.
2. 4" DIAMETER HDPE FLEXIBLE DRAIN PIPE OF SKIMMER DEWATERING DEVICE TO ATTACH TO ANY 4½"ø ORIFICE THROUGH FLANGE WITH RUBBER GASKET AND BE MADE WATERTIGHT AROUND PERIMETER OF FLEXIBLE PIPE. DEVICE TO ATTACH TO STRUCTURE WITH CONCRETE SCREWS OR OTHER SUITABLE ATTACHMENT AS APPROVED BY THE ENGINEER. FOLLOWING POND CONVERSION, SKIMMER DEWATERING DEVICE AND ALL TEMPORARY MATERIALS USED TO BLOCK OPENINGS SHALL BE REMOVED. COST OF SKIMMER ATTACHMENT AND REMOVAL SHALL BE INCIDENTAL TO ITEM 275000 - SKIMMER DEWATERING DEVICE.

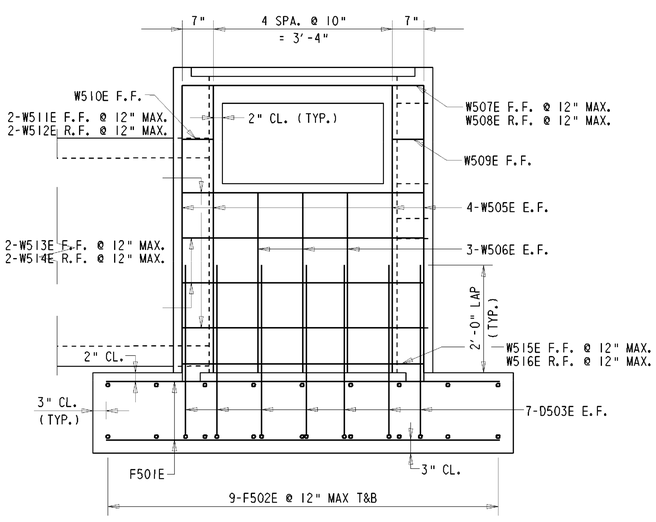

SECTION B-B

NOT TO SCALE
(SECTION E-E OPPOSITE HAND)

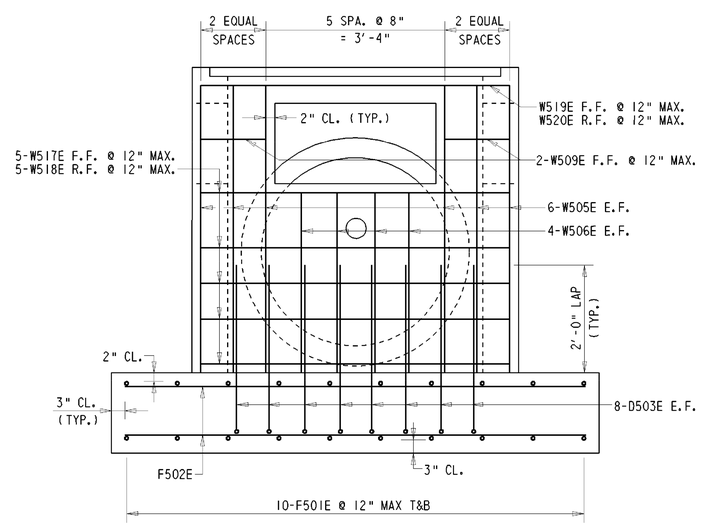

SECTION C-C

NOT TO SCALE

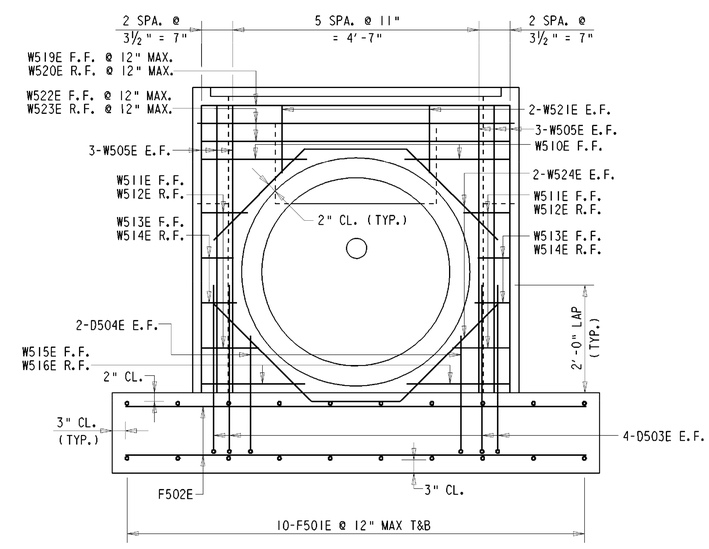

SECTION D-D

NOT TO SCALE

PREL. TRACING ____ J.A.D. ____ DESIGN ____ R.R.W./K.M.F. ____ CHKD. ____ J.M.P. ____

9/10/2004

M:\3128407\sw03dtrp.dgn