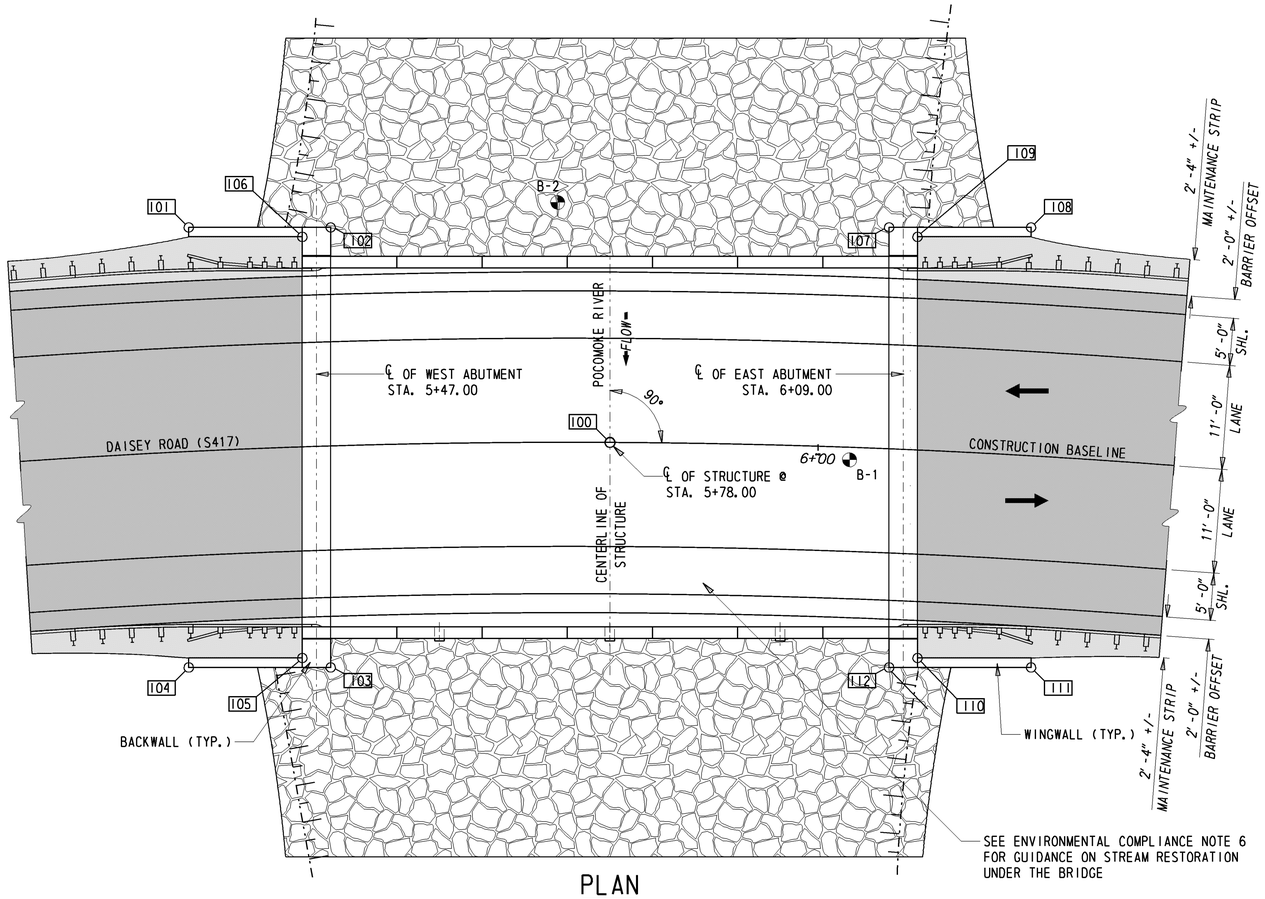

PLAN

1/8" = 1'-0"

WORKING POINTS				
POINT	STATION	OFFSET	NORTHING	EASTING
100	5+78.00	0.00	175128.19	678486.38
101	X+XX.00	XX.XX	XXX.XX	XXX.XX
102	X+XX.00	XX.XX	XXX.XX	XXX.XX
103	X+XX.00	XX.XX	XXX.XX	XXX.XX
104	X+XX.00	XX.XX	XXX.XX	XXX.XX
105	X+XX.00	XX.XX	XXX.XX	XXX.XX
106	X+XX.00	XX.XX	XXX.XX	XXX.XX
107	X+XX.00	XX.XX	XXX.XX	XXX.XX
108	X+XX.00	XX.XX	XXX.XX	XXX.XX
109	X+XX.00	XX.XX	XXX.XX	XXX.XX
110	X+XX.00	XX.XX	XXX.XX	XXX.XX
111	X+XX.00	XX.XX	XXX.XX	XXX.XX
112	X+XX.00	XX.XX	XXX.XX	XXX.XX

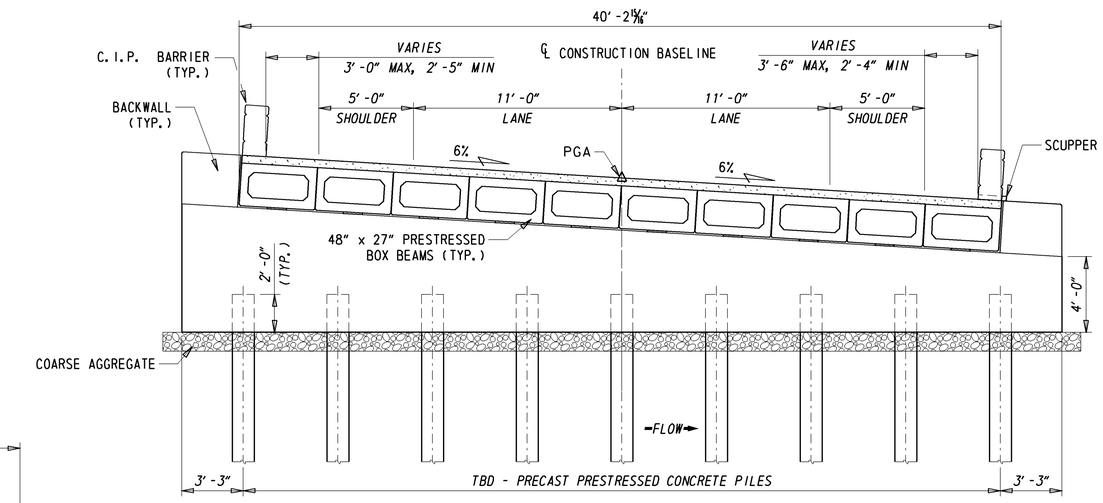

BRIDGE SECTION

(EAST ABUTMENT)

1/4" = 1'-0"

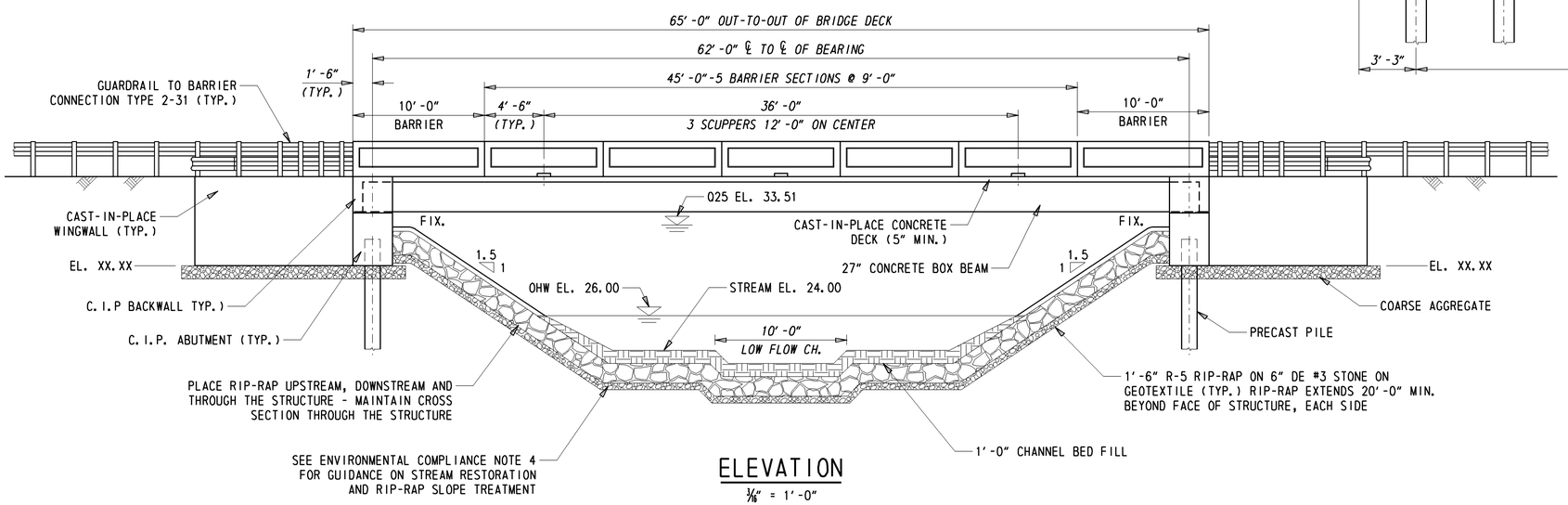

ELEVATION

3/16" = 1'-0"

Y:\SUSSEX\417\BRIDGE\T201207602\PLANS\PE.DGN

DELAWARE DEPARTMENT OF TRANSPORTATION	ADDENDUMS / REVISIONS	SCALE: AS NOTED	BR 3-558 ON S417 DAISEY ROAD OVER POCOMOKE RIVER	CONTRACT T201207602	BRIDGE NO. 3-558	BRIDGE PLAN, SECTION AND ELEVATION	SHEET NO. 9
				COUNTY SUSSEX	DESIGNED BY: SMW		TOTAL SHTS. 17
					CHECKED BY: EM		