C/L PIER 15W
C/L PIER 15E
C/L PIER 14
C/L PIER 13
C/L PIER 12
C/L PIER 11
C/L PIER 10
495
6
Christiana Ave

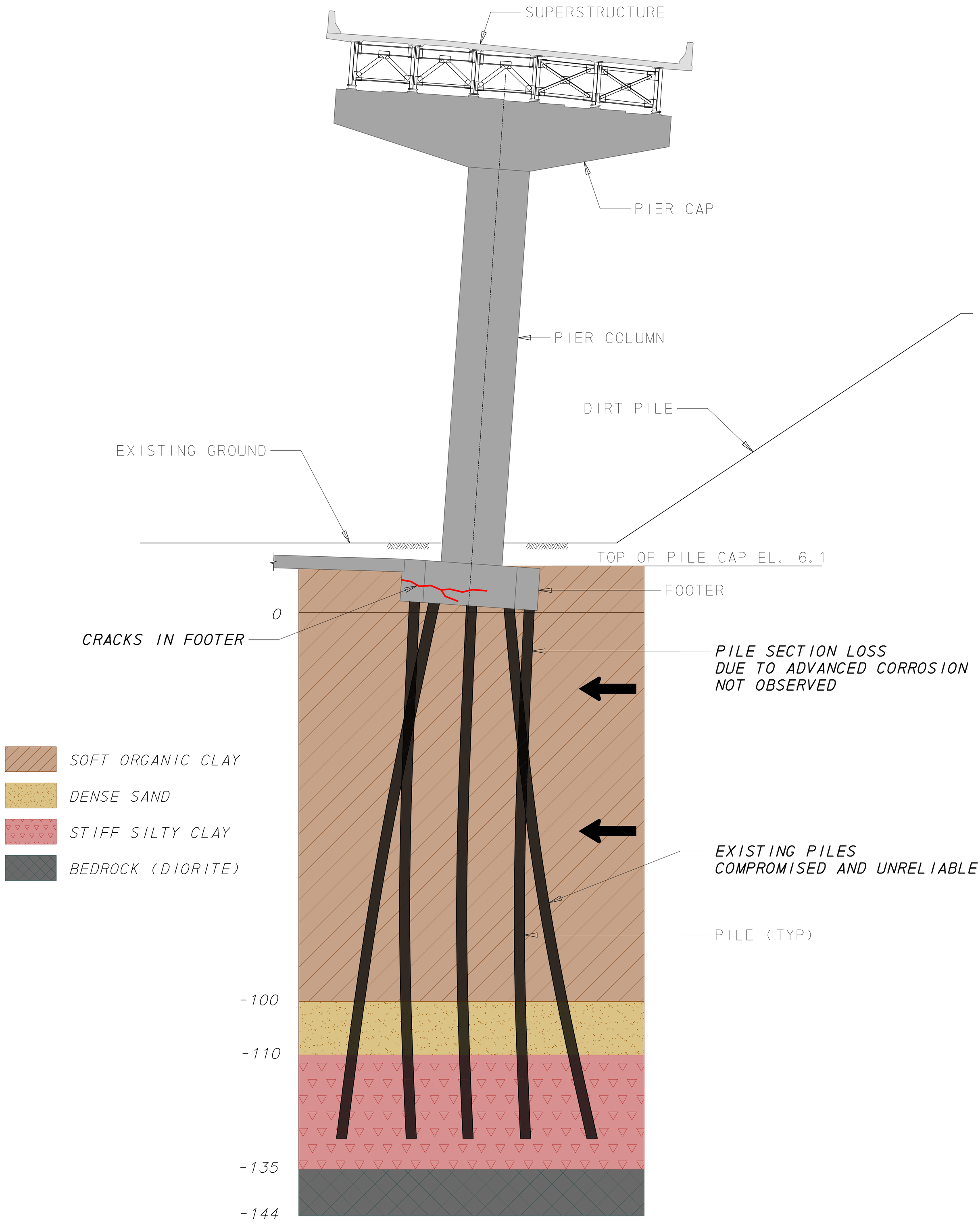

CURRENT CONDITION

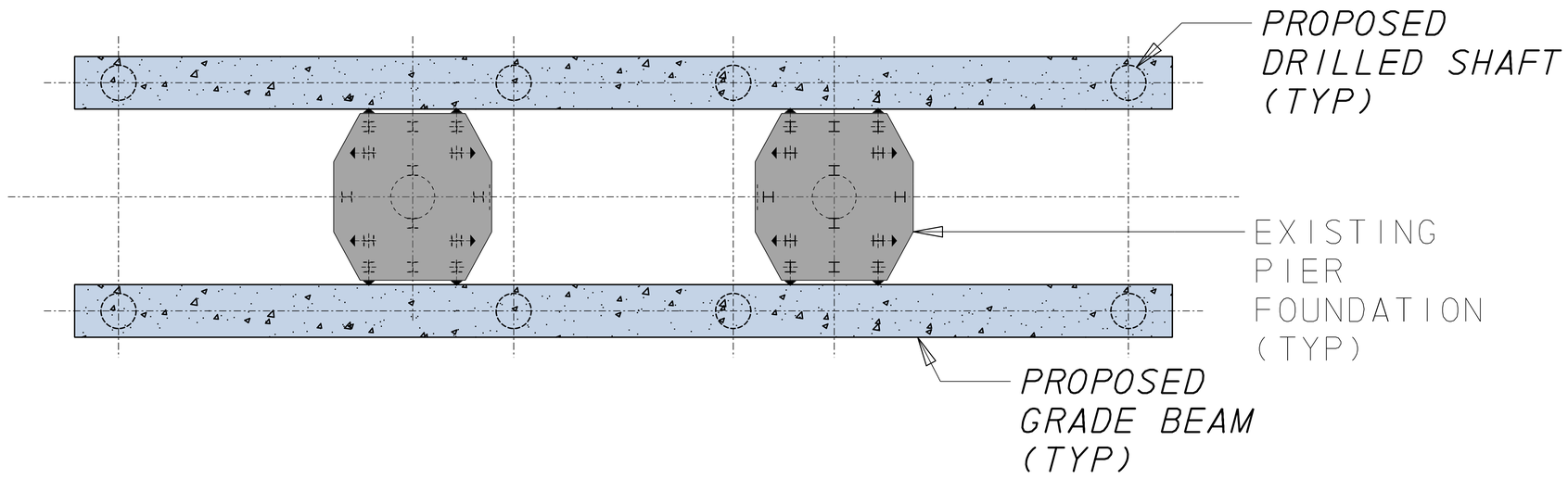

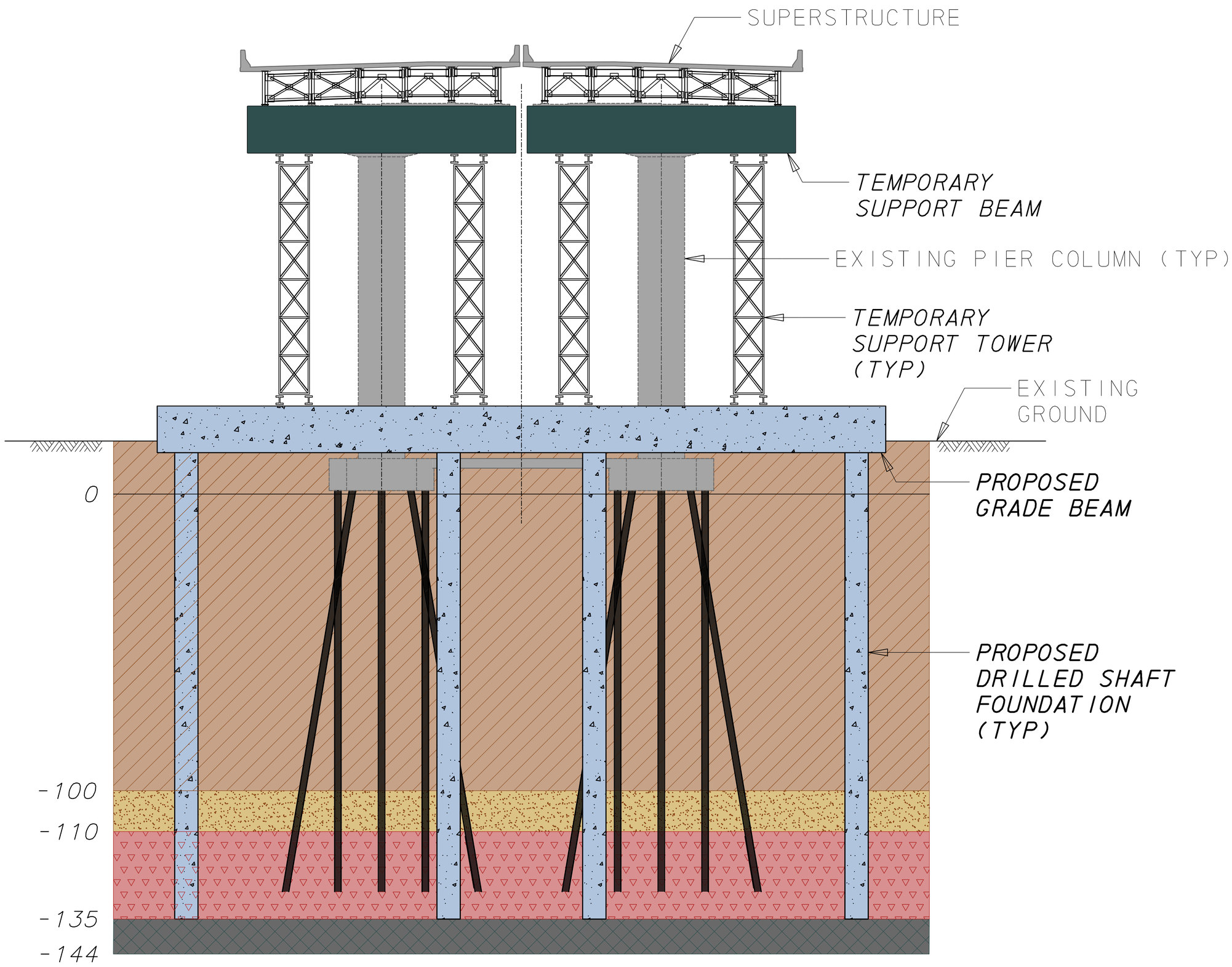

SOFT ORGANIC CLAY

DENSE SAND

STIFF SILTY CLAY

BEDROCK (DIORITE)

PROPOSED FOUNDATION REPAIR (TEMP CONDITION)

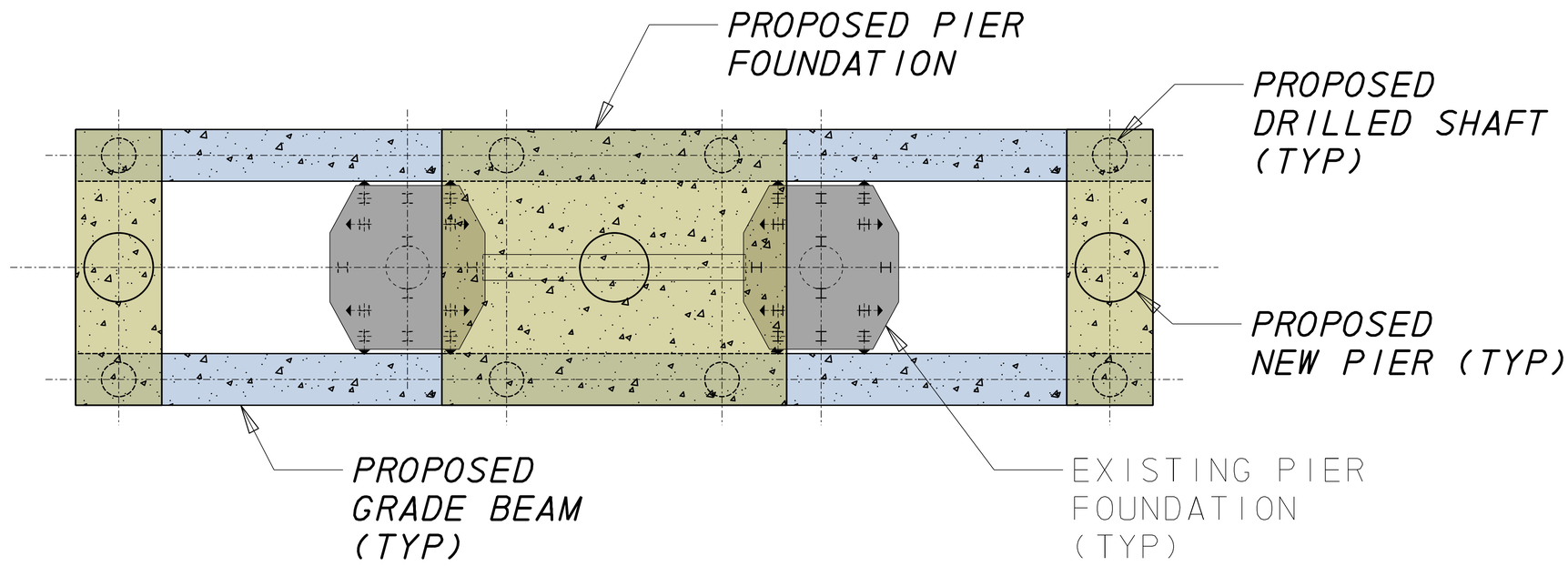

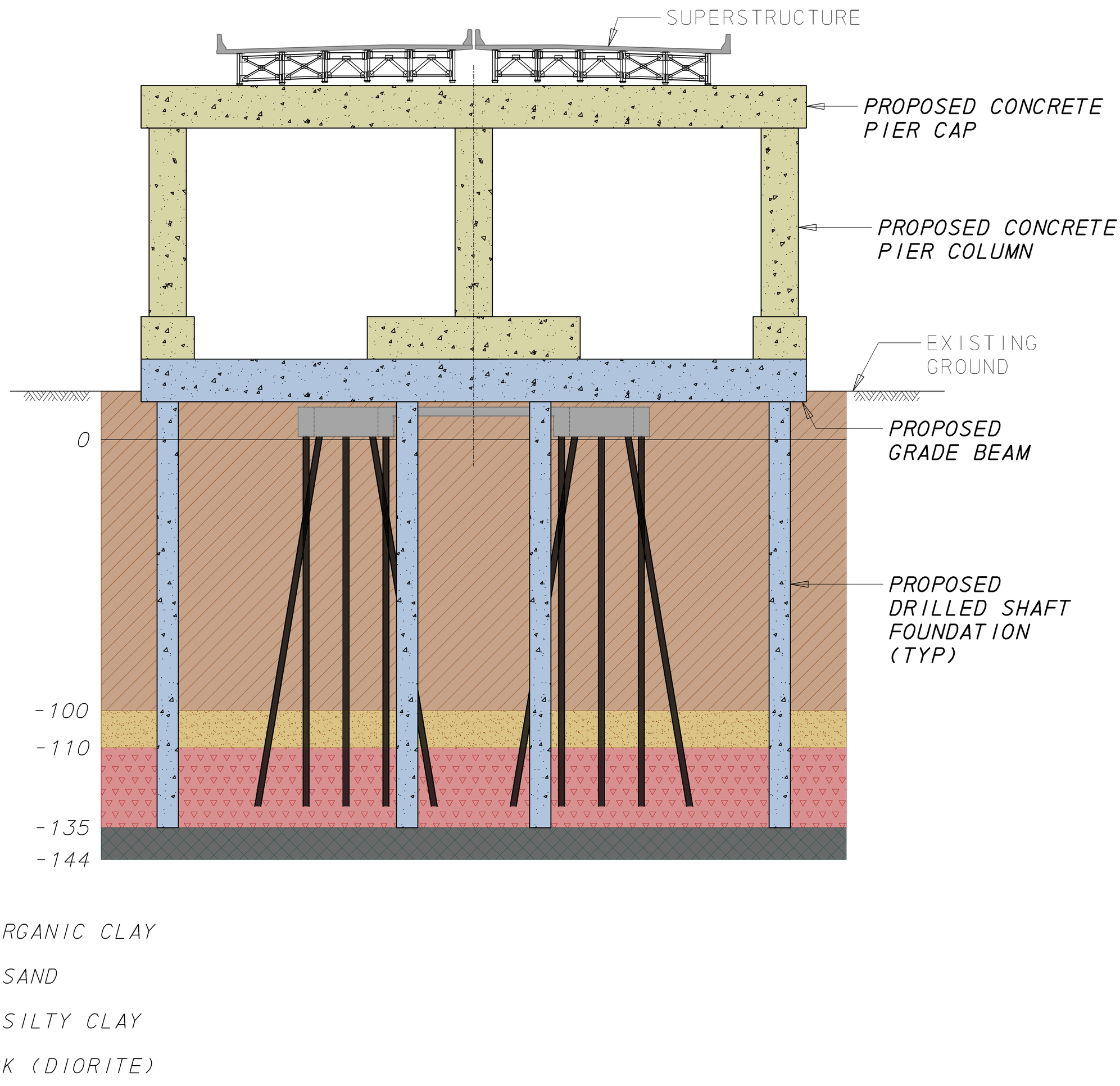

PROPOSED FOUNDATION REPAIR (FINAL CONDITION)

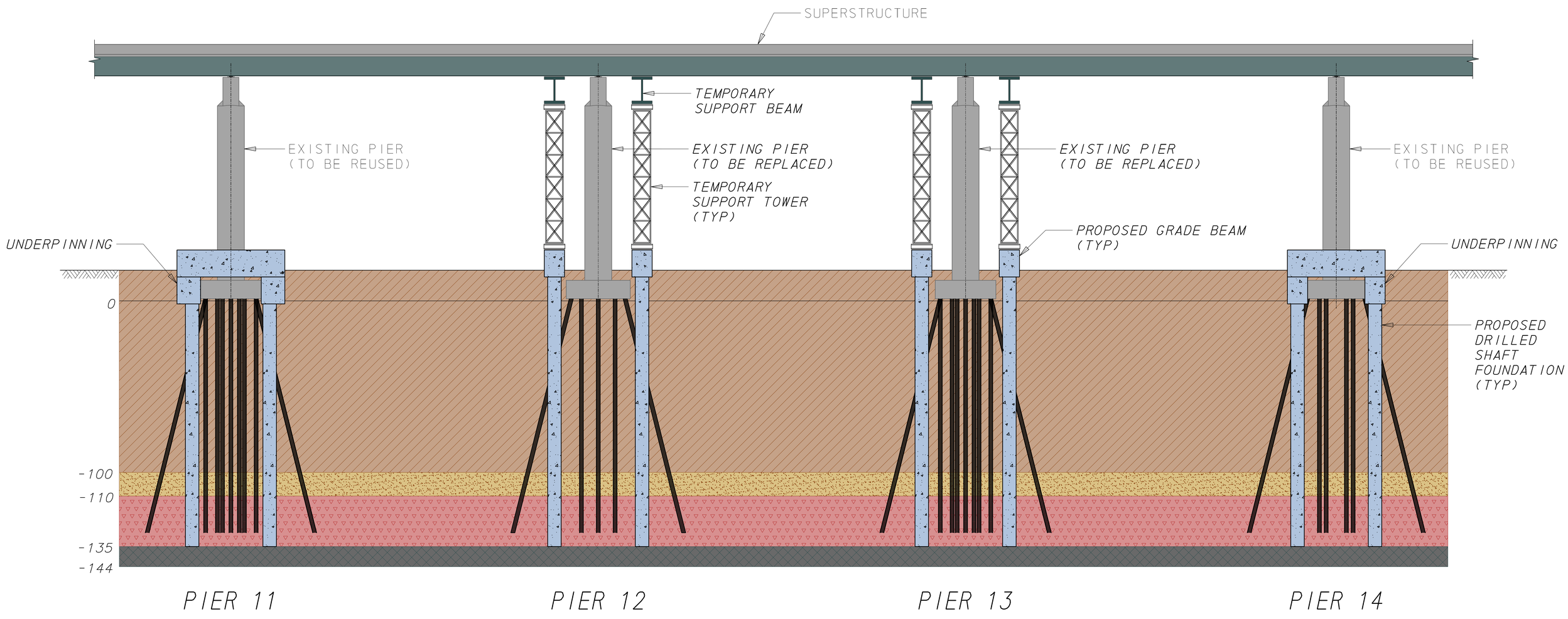

SOFT ORGANIC CLAY

DENSE SAND

STIFF SILTY CLAY

BEDROCK (DIORITE)

PROPOSED FOUNDATION REPAIR / TEMPORARY SUPPORT ELEVATION