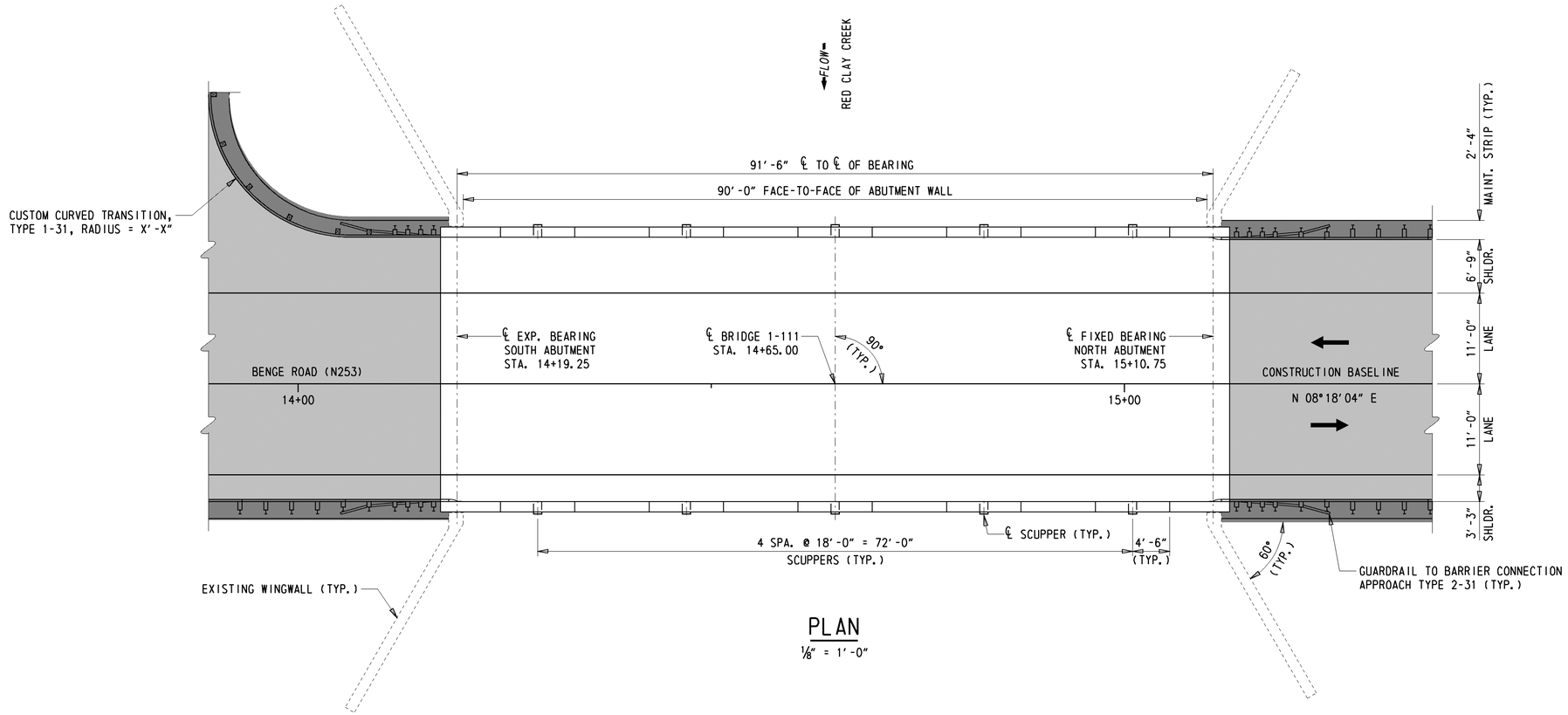

PLAN

1/8" = 1'-0"

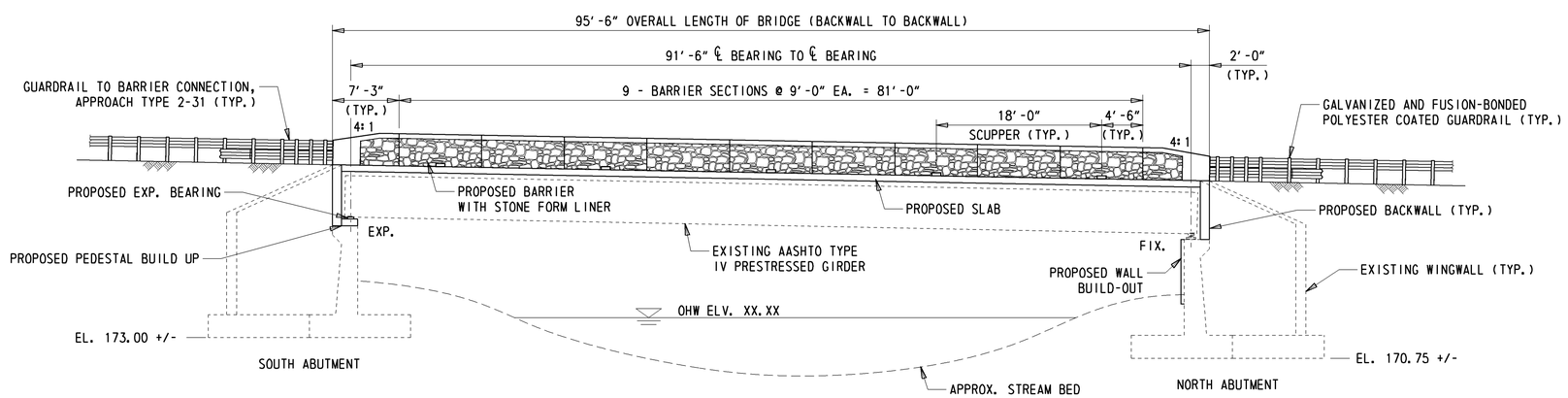

EAST ELEVATION

1/8" = 1'-0"

DELAWARE DEPARTMENT OF TRANSPORTATION	ADDENDUMS / REVISIONS	SCALE AS NOTED	BR 1-111 & BR 1-599 ON N253 BENGE ROAD OVER RED CLAY CREEK & MILL RACE	CONTRACT T201507404	BRIDGE NO. 1-111	BRIDGE PLAN AND ELEVATION	SHEET NO. 8
				COUNTY NEW CASTLE	DESIGNED BY: CBB/SMW		TOTAL SHTS. 21
					CHECKED BY: KRL		

Y:\NEWCASTL\253\BRIDGE\T201507404\PLANS\PE.DGN

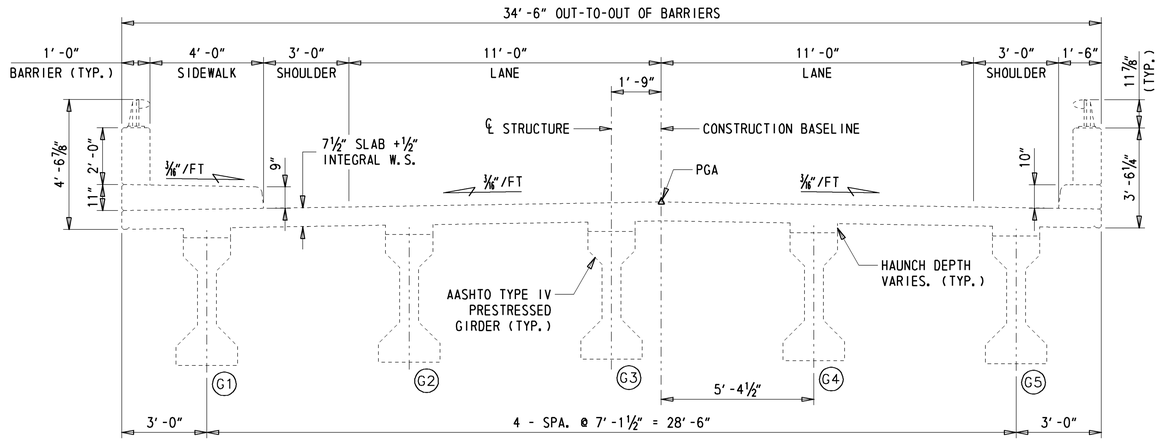

EXISTING SECTION

3/8" = 1'-0"

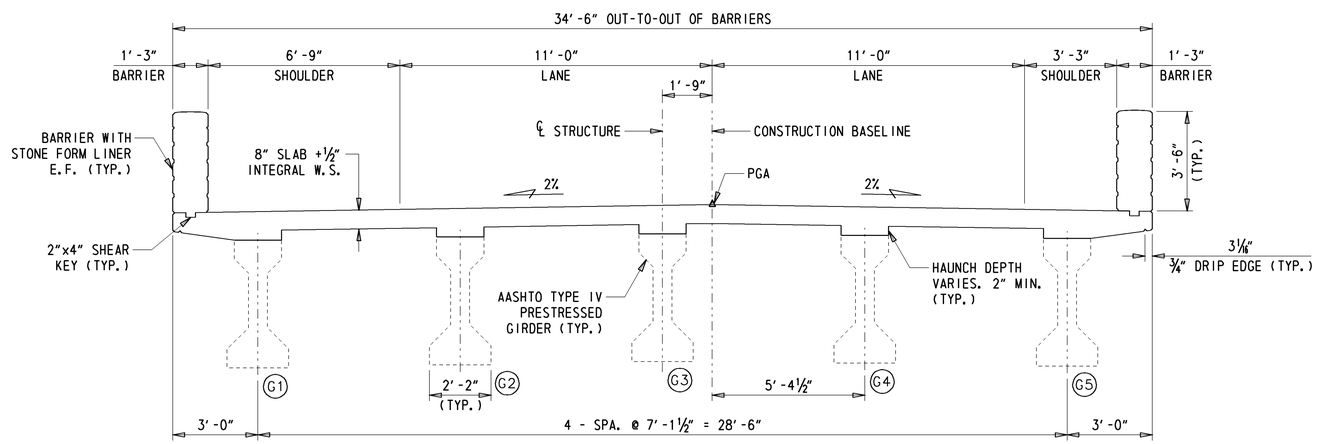

PROPOSED SECTION

3/8" = 1'-0"

Y:\NEWCASTL\253\BRIDGE\T201507404\PLANS\TS02.DGN

DELAWARE DEPARTMENT OF TRANSPORTATION	ADDENDUMS / REVISIONS	SCALE AS NOTED	BR 1-111 & BR 1-599 ON N253 BENGE ROAD OVER RED CLAY CREEK & MILL RACE	CONTRACT T201507404	BRIDGE NO. 1-111	BRIDGE EXISTING AND PROPOSED SECTIONS	SHEET NO. 9
				COUNTY NEW CASTLE	DESIGNED BY: CBB/SMW		TOTAL SHTS. 21
					CHECKED BY: KRL		