STATE OF DELAWARE

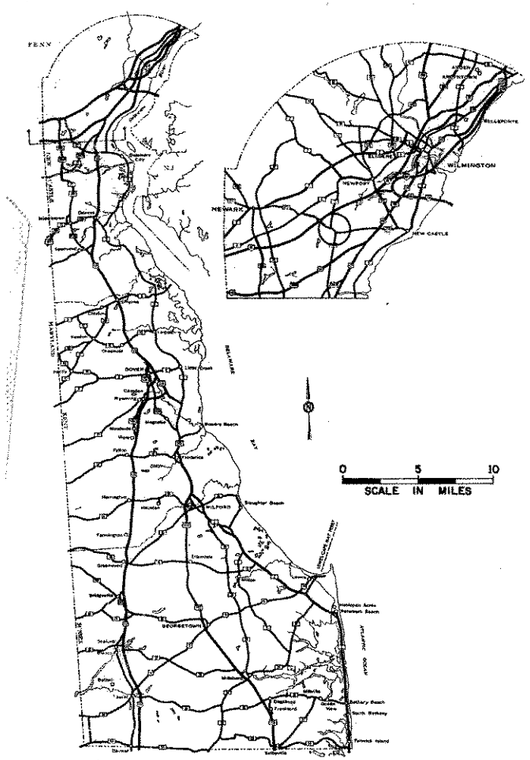

GENERAL LOCATION OF CONTRACT

THE STATE OF DELAWARE

SR 7 over Eagle Run

1 of 1

DEPARTMENT OF TRANSPORTATION
DIVISION OF HIGHWAYS

SPECIFICATION AND CONSTRUCTION PLANS FOR:

DELAWARE ROUTE 7
PHASE I

CONTRACT NUMBER 83-101-02

FEDERAL AID PROJECT NUMBER F-1045(26)

ROADWAY LENGTH 8437.34 FEET= 1.598 MILES
STRUCTURE LENGTH 1062.66 FEET= 0.201 MILES
TOTAL LENGTH 9500 FEET= 1.799 MILES

CONTRACT	COUNTY	STATE	F.H.W.A. REG. NO.	FEDERAL AID PROJECT NUMBER	SHEET NUMBER	TOTAL SHEETS
83-101-02	NEW CASTLE	DEL.	3	F-1045 (26)	1	497

DESIGN DESIGNATION

FUNCTIONAL CLASS Arterial
TYPE OF CONSTRUCTION New Const.
A.D.T. CURRENT 14,734
A.D.T. PROJECTED 56,807
D.H.V. PROJECTED 5,681
DESIGN SPEED 60 MPH
% TRUCKS 5
DIRECTION DISTRIBUTION %

SCALES

PLAN SHEET: 1"= 30' Feet
PROFILE SHEET:
Horizontal: 1"= 30' Feet
Vertical: 1"= 10' Feet
DETAIL SHEET: 1"= NA Feet

INDEX OF SHEETS

SHEET NO.	TABLE OF CONTENTS
1	TITLE SHEET
2-3	PLAN SHEET INDEX AND GENERAL NOTES
4-10	QUANTITY SHEETS
11	MONUMENT TABULATION & EARTHWORK SUMMARY
12-20	TYPICAL SECTIONS
21	LEGEND
22-44	PLAN SHEETS
45-65	PROFILE SHEETS
66-67	CURVE DATA
68-71	ALIGNMENT DATA PLANS
72	ALIGNMENT DATA TABLE
73-123	STAGE CONSTRUCTION PLANS TRAFFIC CONTROL
124-145	PAVEMENT GRADE PLANS
146-166	PAVEMENT JOINT LAYOUT AND CONTOUR GRADING PLANS
167	DRAINAGE DETAILS
168-171	MISCELLANEOUS DETAILS
172-176	EROSION CONTROL DETAILS
177-178	SIGN LOCATION DETAILS
179-183	SIGN PANEL TABULATION AND DETAILS
184-402	BRIDGE PLANS
403-409	SIGN STRUCTURE PLANS
410-431	SIGNING AND STRIPING PLANS
432-437	TRAFFIC SIGNAL PLANS
	STANDARD DETAIL SHEETS (C-1, C-2, C-3, C-4, D-1, D-2, D-7, D-8, D-9, D-14, D-15, D-16, D-19, E-1, G-2, G-3, G-4, G-5, G-6, G-7, G-8, H-2, M-3, S-3, T-5)

UTILITIES

AMERICAN TELEPHONE & TELEGRAPH COMPANY
ARTESIAN WATER COMPANY
DELMARVA POWER & LIGHT COMPANY (ELECTRIC)
DIAMOND STATE TELEPHONE
NEW CASTLE COUNTY SANITARY SEWERS

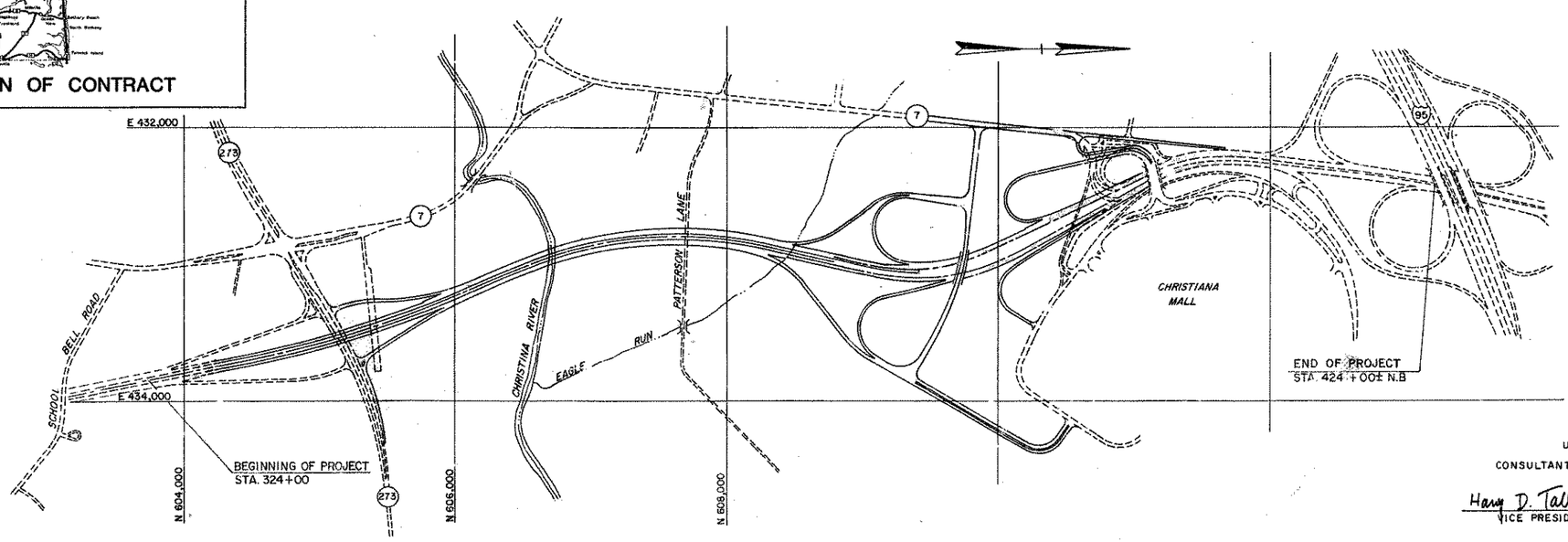

PREPARED BY
URBAN ENGINEERS INC.
CONSULTANTS PHILADELPHIA PA. 19106

Harry D. Talley
VICE PRESIDENT

August 30, 1988
DATE

HARRY D. TALLEY REGISTERED No. 5673 DELAWARE PROFESSIONAL ENGINEER

DIVISION OF HIGHWAYS

RECOMMENDED	RECOMMENDED	RECOMMENDED	RECOMMENDED	APPROVED
Joseph M. Satterfield Jr. PROJECT ENGINEER	David Jamison REVIEW DESIGN ENGINEER	Chas N. Hu BRIDGE ENGINEER	Raymond M. Harlowe DEPUTY DIRECTOR OF HIGHWAYS	DIRECTOR OF HIGHWAYS
Jan. 26 19 90	RECOMMENDED Jan 26 19 90	RECOMMENDED Jan 26 19 90	RECOMMENDED 1/26 19 90	APPROVED: 1/26/ 19 90
SEAL (Joseph M. Satterfield Jr. REGISTERED NO. 4523 DELAWARE PROFESSIONAL ENGINEER)	SEAL (DAVID JAMISON REGISTERED NO. 4614 DELAWARE PROFESSIONAL ENGINEER)	SEAL	SEAL	SEAL (JOHN TYLER DAVIS REGISTERED NO. 4376 DELAWARE PROFESSIONAL ENGINEER)

DEPARTMENT OF TRANSPORTATION
FEDERAL HIGHWAY ADMINISTRATION

APPROVED _____ 19 ____

_____
DIVISION ADMINISTRATOR

DWG. NO.	CONTRACT	COUNTY	FEDERAL AID PROJECT Nº	SHEET Nº	TOTAL SHEETS
33	83-101-02	NEW CASTLE	F-1045 (26)	318	492

ROUTE 7
OVER EAGLE RUN
3 SPAN CONT. COMP. P/S CONC. BOX BM. BRIDGE
GENERAL PLAN

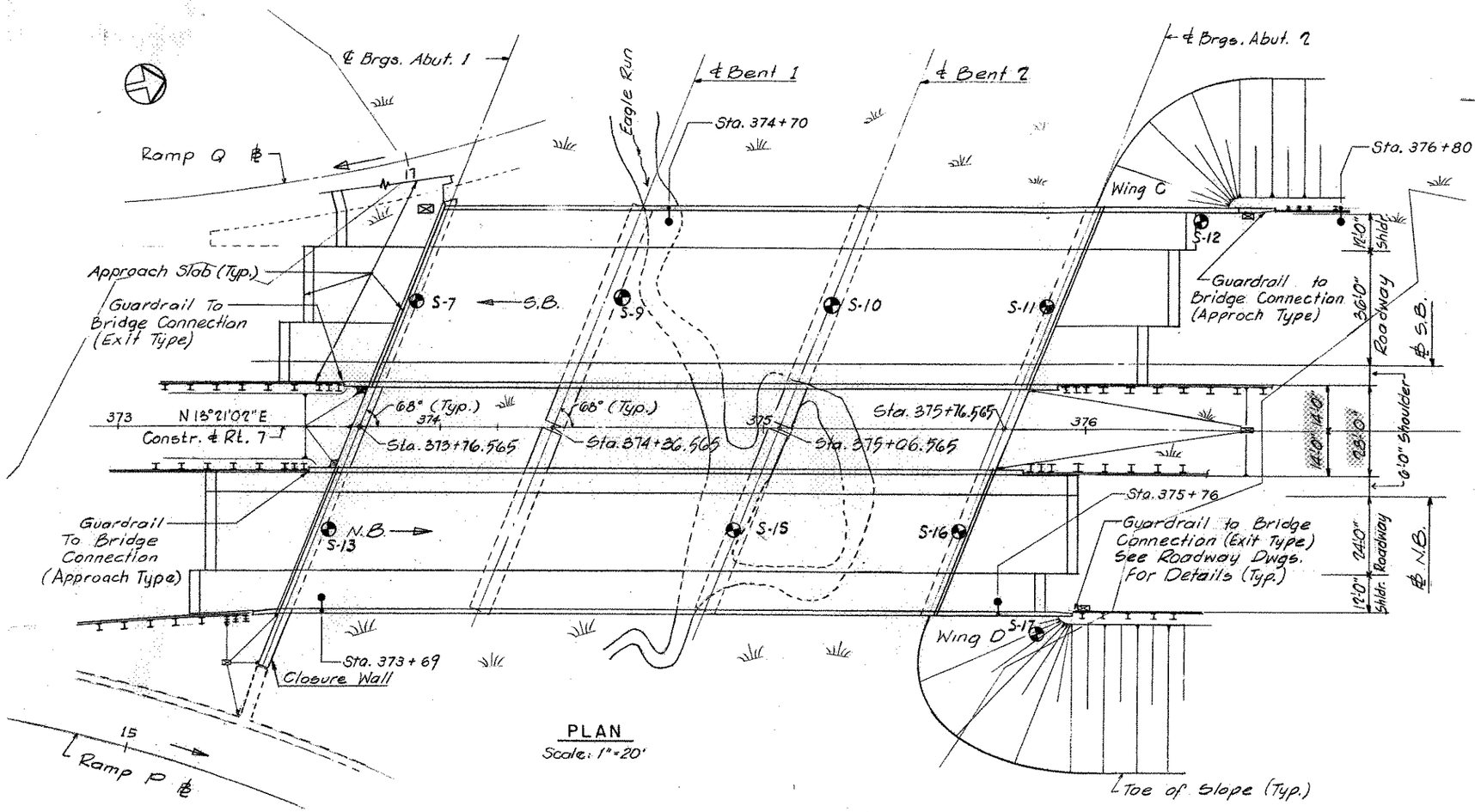

PLAN
Scale: 1" = 20'

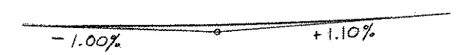

P.V.I. Sta. 370+00.00
Elev. 22.95
V.C. 1000'
M.O. +2.63

VERTICAL CURVE DATA
FOR ROUTE-7

HYDRAULIC DATA

Design Flood: Frequency 100 Years
Magnitude 828 CFS
High Water Elev. 18.30

Denotes Borings

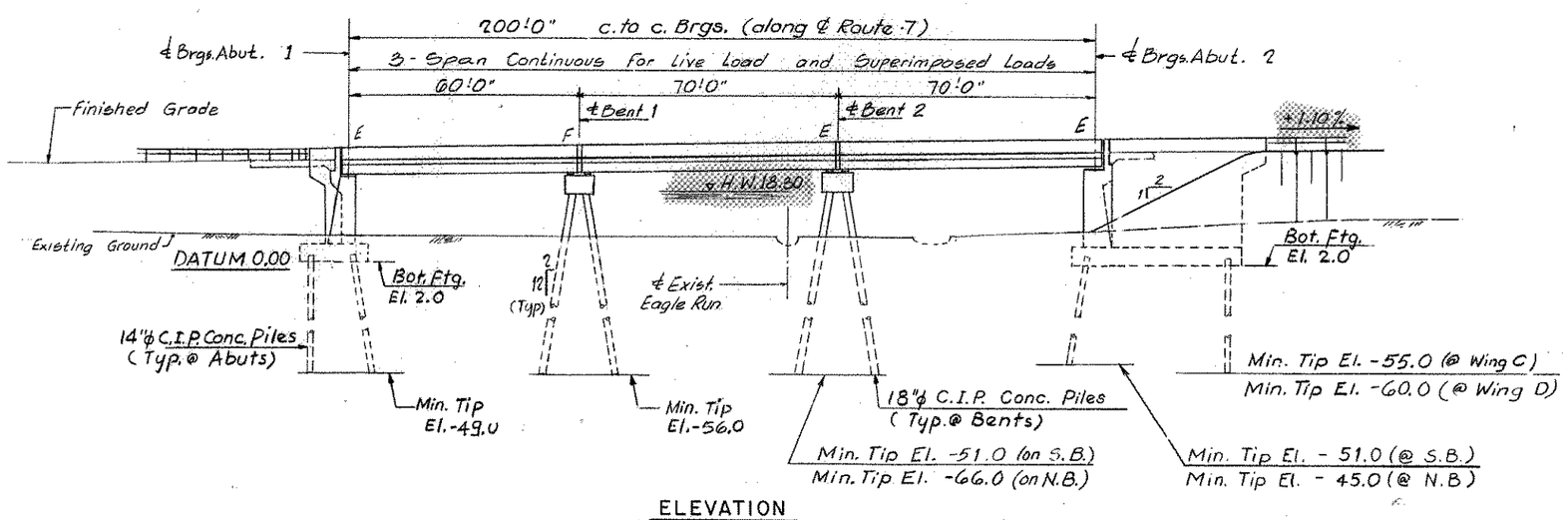

ELEVATION
Scale: 1" = 20'

DWG. NO.	CONTRACT	COUNTY	FEDERAL AID PROJECT Nº	SHEET Nº	TOTAL SHEETS
34	83-101-02	NEW CASTLE	F-1045 (26)	319	492

ROUTE 7
OVER EAGLE RUN
3 SPAN CONT. COMP. P/S CONC. BOX BM. BRIDGE
TYPICAL SECTIONS

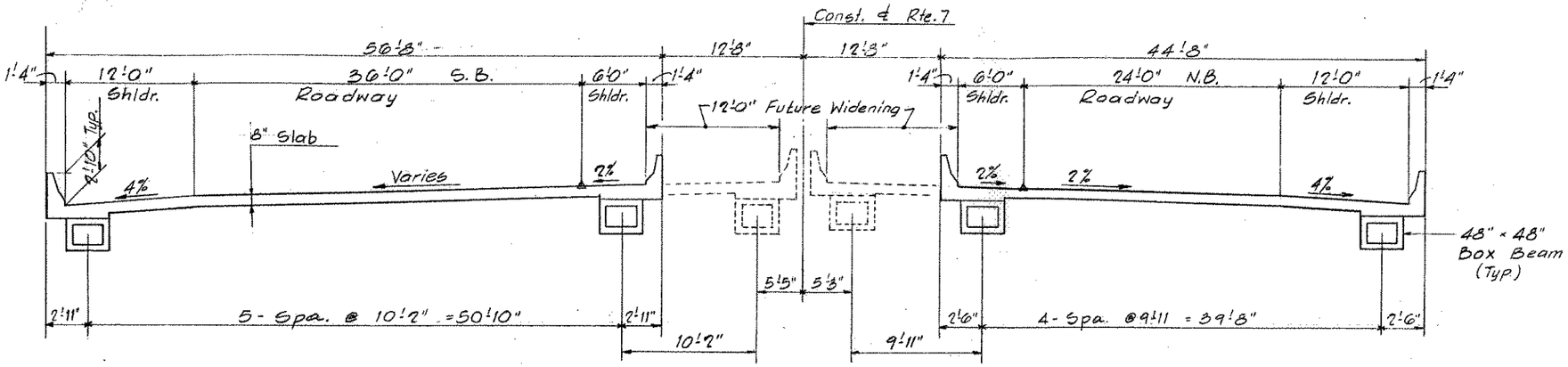

TYPICAL SECTION
Scale: 1" = 6'

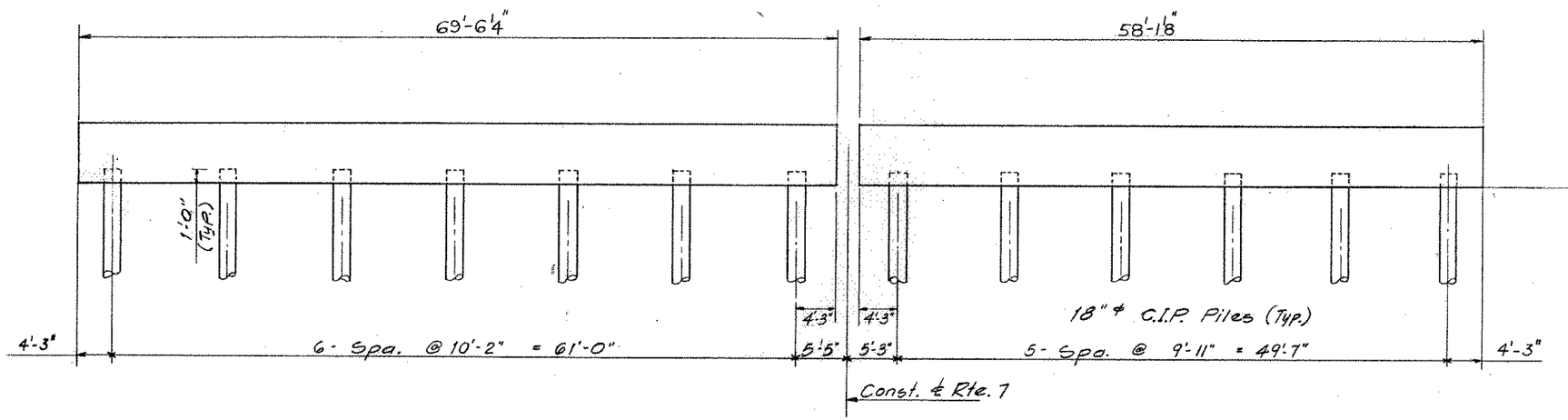

TYPICAL BENT SECTION
Scale: 1" = 6'

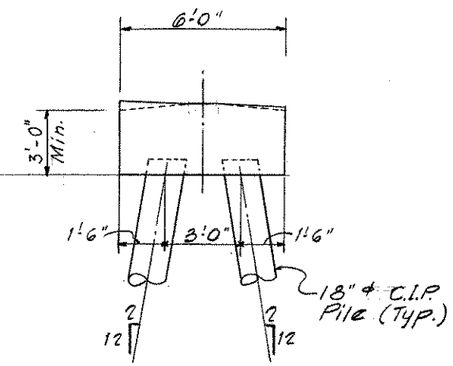

BENT 1 & 2
Scale: ⅜" = 1'-0"

DWG. NO.	CONTRACT	COUNTY	FEDERAL AID PROJECT No.	SHEET No.	TOTAL SHEETS
35	83-101-02	NEW CASTLE	F-1045 (26)	320	492

ROUTE 7 OVER
EAGLE RUN
3 SPAN CONT. COMP. P/S CONC. BOX BM. BRIDGE
GENERAL NOTES & QUANTITIES

GENERAL NOTES

- DESIGN SPECIFICATIONS: 1989 AASHTO STANDARD SPECIFICATIONS FOR HIGHWAY BRIDGES. WELDING SHALL CONFORM TO AASHTO/AWS BRIDGE WELDING CODE D1.5-88.
- DESIGN CRITERIA: LOAD FACTOR DESIGN METHOD. LIVE LOAD AASHTO HS20-44 + 25% TANDEM 24 KIP AXLES AT 4 FOOT CENTERS OR DELAWARE 35 TON TRUCK, WHICHEVER GOVERNS.
- MATERIAL AND FABRICATIONS: IN ACCORDANCE WITH THE DELAWARE STANDARD SPECIFICATIONS, JULY 1985, AND WITH THE CONTRACT'S SPECIAL PROVISIONS.
- CONCRETE: CLASS AND SPECIFIED COMPRESSIVE STRENGTH (F'c):

DECK SLAB AND PARAPETS	- CLASS D, 4,500 PSI
CONCRETE ABOVE FOOTINGS & BENT CAPS	- CLASS A, 4,500 PSI
CONCRETE IN FOOTINGS	- CLASS B, 3,000 PSI
CONCRETE IN 18"ø CAST-IN-PLACE PILES	- CLASS A, 4,500 PSI
CONCRETE IN 14"ø CAST-IN-PLACE PILES	- CLASS B, 3,000 PSI
CONCRETE IN 16" □ PRECAST, PRESTRESSED CONCRETE PILES.	- CLASS P, 6,000 PSI
CONCRETE IN 14" □ PRECAST, PRESTRESSED CONCRETE PILES.	- CLASS P, 6,000 PSI
CONCRETE IN PRESTRESSED GIRDERS	- CLASS P, SEE PRESTRESSED GIRDER DETAILS
CONCRETE IN APPROACH SLAB	- CLASS A, 4,500 PSI

- PROVIDE 2" CONCRETE COVER ON REINFORCEMENT BARS EXCEPT WHERE NOTED OTHERWISE.
- CHAMFER EXPOSED CONCRETE EDGES 3/4" X 3/4" EXCEPT AS NOTED.
- USE PERMANENT METAL DECK FORMS, 20 GAUGE MINIMUM.
- REINFORCEMENT STEEL: ASTM A615 (GRADE 60). ALL DECK SLAB, PARAPET, APPROACH SLAB, AND BACKWALL BARS (INCLUDING ALL DOWELS INTO THE BACKWALL) SHALL BE EPOXY COATED.
- LAP SPLICES AND EMBEDMENT LENGTHS TO CONFORM TO AASHTO SPECIFICATIONS, BUT NOT LESS THAN 30 DIAMETERS.
- SUPERSTRUCTURE: DEAD LOAD INCLUDES 30 PSF PROVISION FOR FUTURE OVERLAY AND 15 PSF PROVISION FOR PERMANENT METAL DECK FORMS. FOR PRESTRESSED NOTES, SEE PRESTRESSED BOX BEAM DETAILS.
- SUPERSTRUCTURE DIMENSIONS ARE BASED ON A NORMAL TEMPERATURE OF 68 F.
- FOUNDATION: ABUTMENTS AND WINGWALLS SHALL BE SUPPORTED BY CAST-IN-PLACE TAPERED 14"ø CONCRETE PILES. DESIGN CAPACITY 60 TONS MINIMUM. PIERS SHALL BE SUPPORTED BY 18"ø CAST-IN-PLACE CONCRETE BENT-PILES. DESIGN CAPACITY 110 TONS MINIMUM.
- APPROACH SLAB SHALL BE POURED AFTER DECK SLAB AND ABUTMENT BACKWALLS ARE POURED.
- PLACE CHEEKWALL, CONCRETE SHEAR BLOCKS, AND BACKWALL CONCRETE AFTER BEAMS ARE SET IN POSITION.
- ALL DIMENSIONS SHOWN ARE HORIZONTAL EXCEPT AS NOTED.
- ABUTMENT BACKWALLS MAY BE PLACED UP TO A CONSTRUCTION JOINT BELOW THE LEVEL OF THE BOTTOM OF DECK SLAB PRIOR TO CONSTRUCTION OF THE DECK.
- RAKE-FINISH ALL HORIZONTAL CONSTRUCTION JOINTS EXCEPT AS INDICATED.
- WATERPROOFING IS APPLIED ON F.F. OF BACKWALLS, BEARING SEATS AND F.F. OF ABUTMENTS.
- FOR CONTRACTION JOINT DETAIL, EXPANSION JOINT DETAIL, WATERSTOP DETAIL, CONSTRUCTION JOINT DETAIL, P.V.C. WATERSTOP DETAIL AND WATERPROOFING DETAIL SEE SHEET NO. 221
- FOR EXPANSION JOINT AND FOR PIPE CONDUIT IN PARAPET SEE SHEET NO. 241
- FOR TRANSVERSE CONSTRUCTION JOINT DETAIL, PARAPET JOINT DETAIL, SUGGESTED STAY-IN-PLACE FORM DETAIL SEE SHEET NO. 243
- FOR CONDUIT TERMINATION IN PAPRAPET, AT END OF WINGWALL SEE SHEET NO. 252
- PAYMENT FOR 2 1/2"ø GALVANIZED CONDUITS AND JUNCTION BOXES AS SHOWN ON THE PLANS IS INCIDENTAL TO COST OF CONCRETE (SECT. 602.38)
- PAYMENT FOR GEOTEXTILE FILTER FABRIC, CRUSHED STONE (DEL. NO. 8 STONE, SEE SECTION 813) AND 2 LAYERS 4 MIL THICK (TOTAL) POLYETHYLENE MEMBRANE AS SHOWN ON DWG. NO. 52 IS INCIDENTAL TO COST OF 8"ø PERFORATED PIPE UNDERDRAIN (SECT. 715.07)
- PAYMENT FOR 8"ø P.V.C. PIPE SCHEDULE 40 AS SHOWN ON DWG. NO. 52 IS INCIDENTAL TO COST OF PORTLAND CEMENT CONCRETE MASONRY @ ABUTMENT ABOVE FOOTING, CLASS A.

△ • SUPERSTRUCTURE CLASS D CONCRETE INCLUDES ALL CONCRETE DIAPHRAGMS

△ • WAVE EQUATION ANALYSIS IS REQUIRED FOR ALL PILE DRIVING.

QUANTITIES

SECTION	DESCRIPTION	UNIT	QUANTITY
207000	EXCAVATION AND BACKFILL OF STRUCTURES	C.Y.	1,220
209003	BORROW TYPE C	C.Y.	6,900
210000	FURNISHING BORROW TYPE C	C.Y.	675
602004 *	PORTLAND CEMENT CONCRETE MASONRY, ABUTMENT FOOTING, CLASS B	C.Y.	575 ~~450~~ △3
602007 *	PORTLAND CEMENT CONCRETE MASONRY, PIER ABOVE FOOTING, CLASS A	C.Y.	220
602009 *	PORTLAND CEMENT CONCRETE MASONRY, APPROACH SLAB, CLASS A	C.Y.	370
602013 *	PORTLAND CEMENT CONCRETE MASONRY, SUPERSTRUCTURE, CLASS D	C.Y.	825 ~~800~~ △
602015 *	PORTLAND CEMENT CONCRETE MASONRY, ABUTMENT ABOVE FOOTING, CLASS A	C.Y.	1,075
602520 *	EPOXY PROTECTIVE COATING FOR CONCRETE	S.Y.	850
603000 *	BAR REINFORCEMENT	LB.	181,000
604000 *	BAR REINFORCEMENT - EPOXY COATED	LB.	299,000
605510	PREFABRICATED EXPANSION JOINT SYSTEM, 2"	L.F.	225
608000	COARSE AGGREGATE FOR FOUNDATION STABILIZATION AND SUBFOUNDATION BACKFILL	TON	150
620002	CAST - IN - PLACE CONCRETE PILES, 14"ø (1)	L.F.	12,300
620004	CAST - IN - PLACE CONCRETE PILES, 18"ø (1)	L.F.	3,000
620006	STEEL SHELL TEST PILES, 14"ø	L.F.	300
620008	STEEL SHELL TEST PILES, 18"ø	L.F.	330
623000	PRESTRESSED REINFORCED CONCRETE MEMBERS, 48" x 48" (2,200 L.F.)	L.S.	-
620525	QUICK PILE LOAD TEST (C.I.P. CONC. PILE, 14" & C.I.P. CONC. PILE, 18") (QUANITY - ONE EACH PILE SIZE)	L.S.	- △
715002	8"ø PERFORATED PIPE UNDERDRAIN	L.F.	430
725000	GUARDRAIL TO BARRIER CONNECTION (APPROACH TYPE)	EA.	4
725001	GUARDRAIL TO BARRIER CONNECTION (EXIT TYPE)	EA.	3

(1) CONTRACTOR MAY SUBSTITUTE A P/S PRECAST PILE OF SIZES SHOWN ON A ONE TO ONE BASIS. FOR DETAILS OF P/S PRECAST PILES SEE DWG. NO. 112

* ESTIMATED FIXED QUANTITIES SEE SECTION 109.06

LEGEND

F.F. = FRONT FACE
R.F. = REAR FACE
E.F. = EACH FACE
U.N. = UNLESS NOTED
EA. = EACH

DWG. NO.	CONTRACT	COUNTY	FEDERAL AID PROJECT No.	SHEET No.	TOTAL SHEETS
36	83-101-02	NEW CASTLE	F-1045 (26)	321	492

ROUTE 7 OVER
EAGLE RUN
3 SPAN CONT. COMP. P/S CONC. BOX BM. BRIDGE
WETLANDS LIMIT

PLAN VIEW
N.T.S.

NOTE:

ENVIRONMEMTAL CONSIDERATIONS HAVE DICTATED THE BRIDGE OPENING AND SKEW, NOT THE MINIMUM HYDRAULIC REQUIREMENTS.

DWG. NO.	CONTRACT	COUNTY	FEDERAL AID PROJECT No.	SHEET No.	TOTAL SHEETS
37	83-101-02	NEW CASTLE	F-1045 (26)	322	492

ROUTE 7 OVER
EAGLE RUN
3 SPAN CONT. COMP. P/S CONC. BOX BM. BRIDGE
STAKE-OUT PLAN

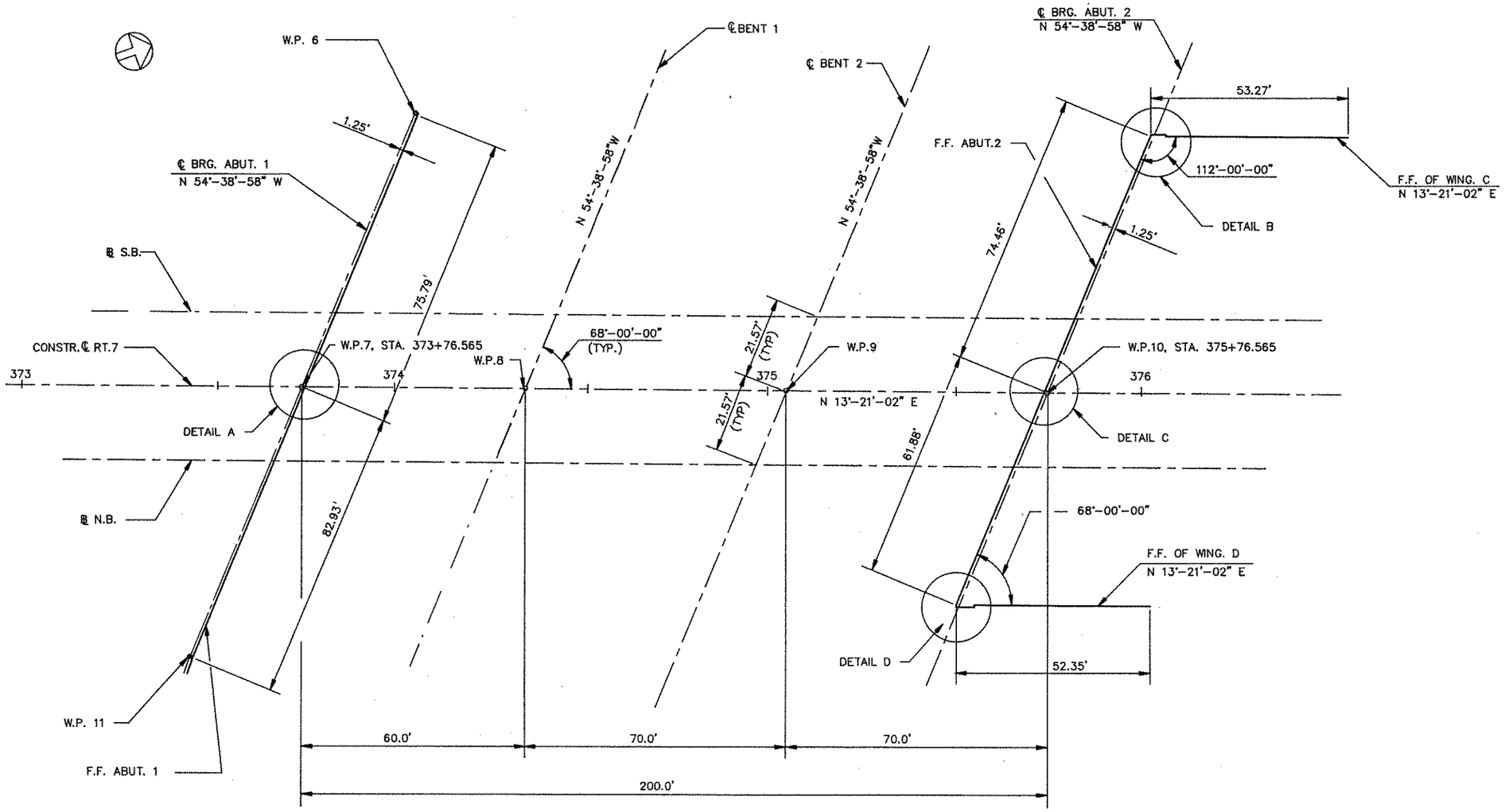

STAKE-OUT PLAN
N.T.S.

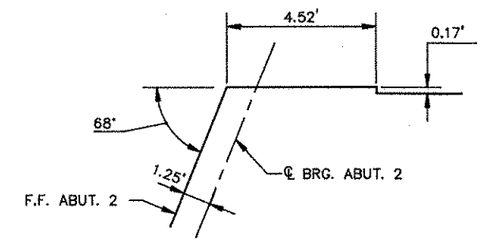

DETAIL B

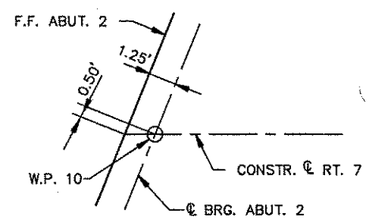

DETAIL C

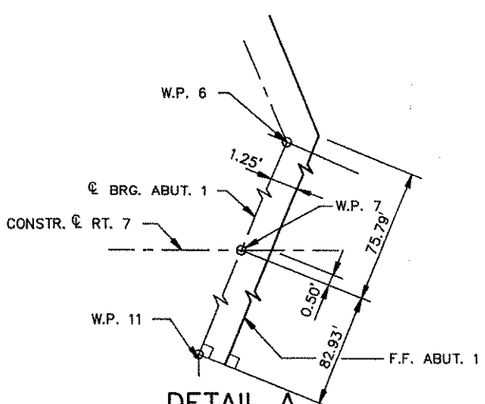

DETAIL A

WORKING POINT	STATION ALONG CONSTR. ℄ RT.7	OFFSET (FT.)	COORDINATES	
			NORTH	EAST
6	374+04.80	69.89	608,487.50	432,821.51
7	373+76.565	0	608,443.89	432,882.99
8	374+36.565	0	608,502.26	432,896.84
9	375+06.565	0	608,570.37	432,913.01
10	375+76.565	0	608,638.48	432,929.17
11	375+45.50	76.89	608,395.91	432,950.63

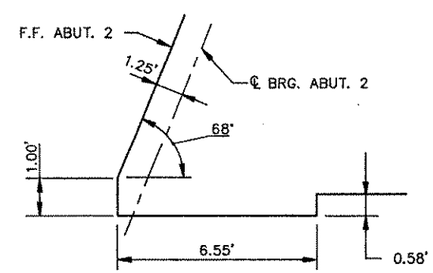

DETAIL D

DWG. NO.	CONTRACT	COUNTY	FEDERAL AID PROJECT No.	SHEET No.	TOTAL SHEETS
38	83-101-02	NEW CASTLE	F-1045 (26)	323	492

ROUTE 7 OVER EAGLE RUN
3 SPAN CONT. COMP. P/S CONC. BOX BM. BRIDGE
ABUTMENT 1 N.B.

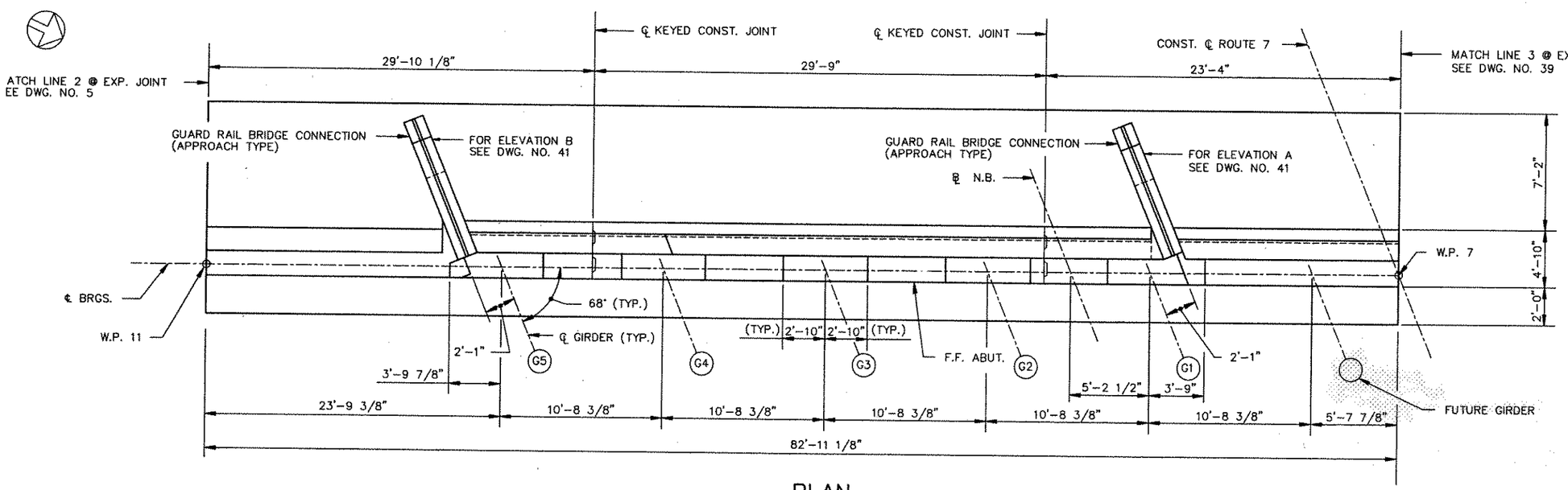

PLAN
SCALE: 1/4"=1'-0"

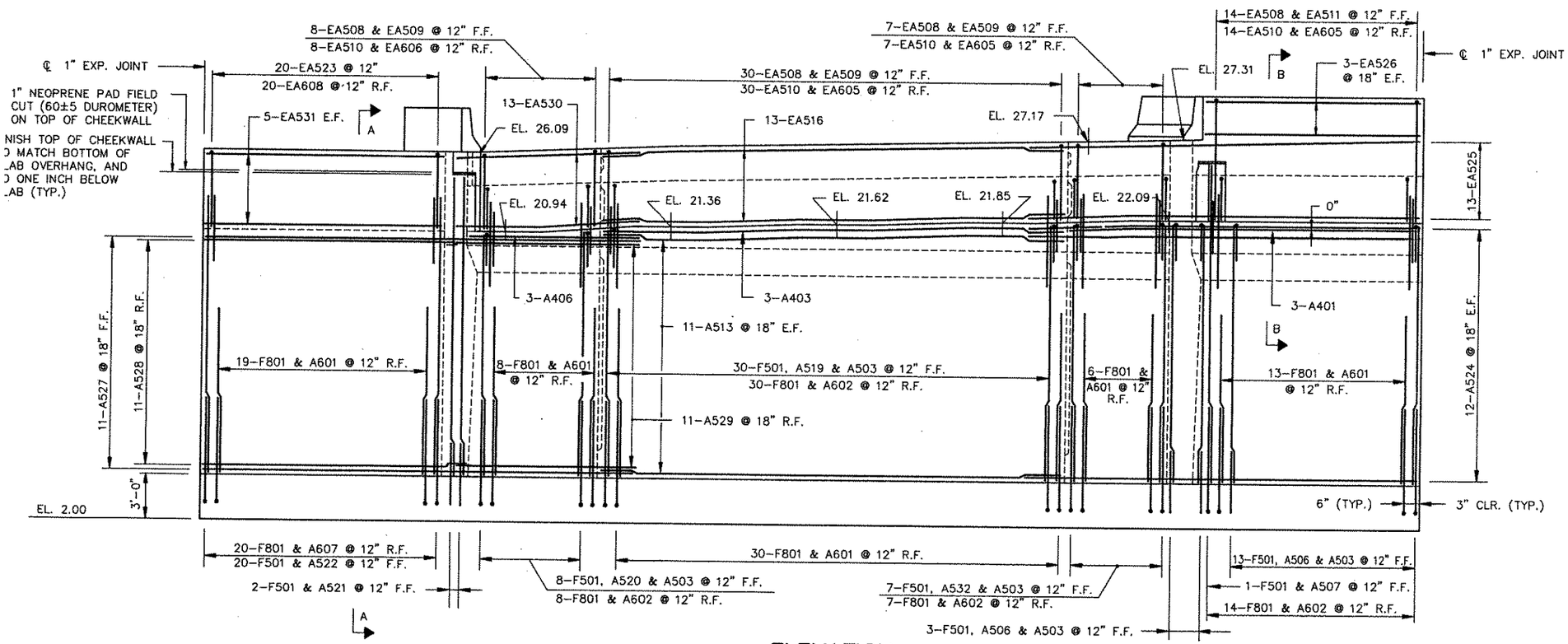

ELEVATION
SCALE: 1/4"=1'-0"

ø C.I.P. TAPERED CONCRETE PILES ARE NOT SHOWN FOR CLARITY.

NOTES:

- FOR STAKE-OUT PLAN SEE DWG. NO. 37
- FOR FRAMING PLAN SEE DWG. NO. 63
- FOR FOOTING PLAN SEE DWG. NO. 40
- FOR DRAINAGE DETAIL SEE DWG. NO. 52
- FOR SECTIONS & ELEVATIONS SEE DWG. NO. 41
- FOR BAR LIST SEE DWG. NO. 53
- FOR LIMITS OF EXCAVATION AND BACKFILL SEE DWG. NO. 51
- FOR EXPANSION JOINT DETAILS SEE DWG. NO. 78
- FOR BEARING PAD DETAIL SEE DWG. NO. 41

DWG. NO.	CONTRACT	COUNTY	FEDERAL AID PROJECT No.	SHEET No.	TOTAL SHEETS
39	83-101-02	NEW CASTLE	F-1045 (26)	324	492

ROUTE 7 OVER EAGLE RUN
3 SPAN CONT. COMP. P/S CONC. BOX BM. BRIDGE
ABUTMENT 1 S.B.

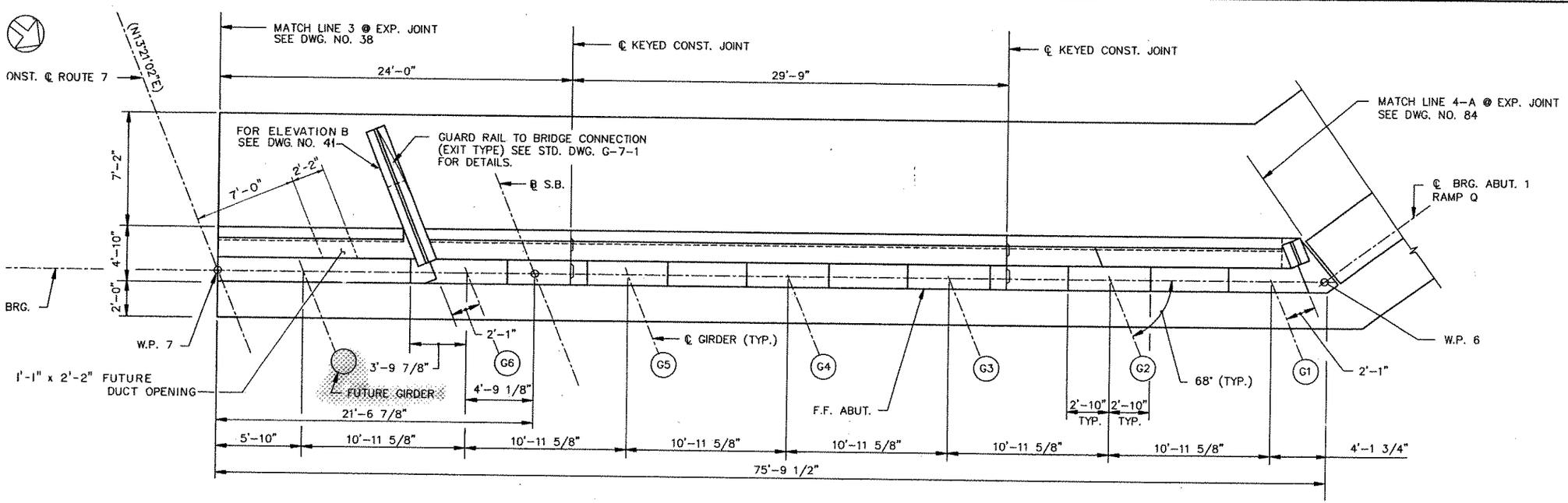

℄ CUT REINFORCING BARS AROUND
DUCT OPENING IN FIELD AND RE-USE.

PLAN
SCALE: 1/4" = 1'-0"

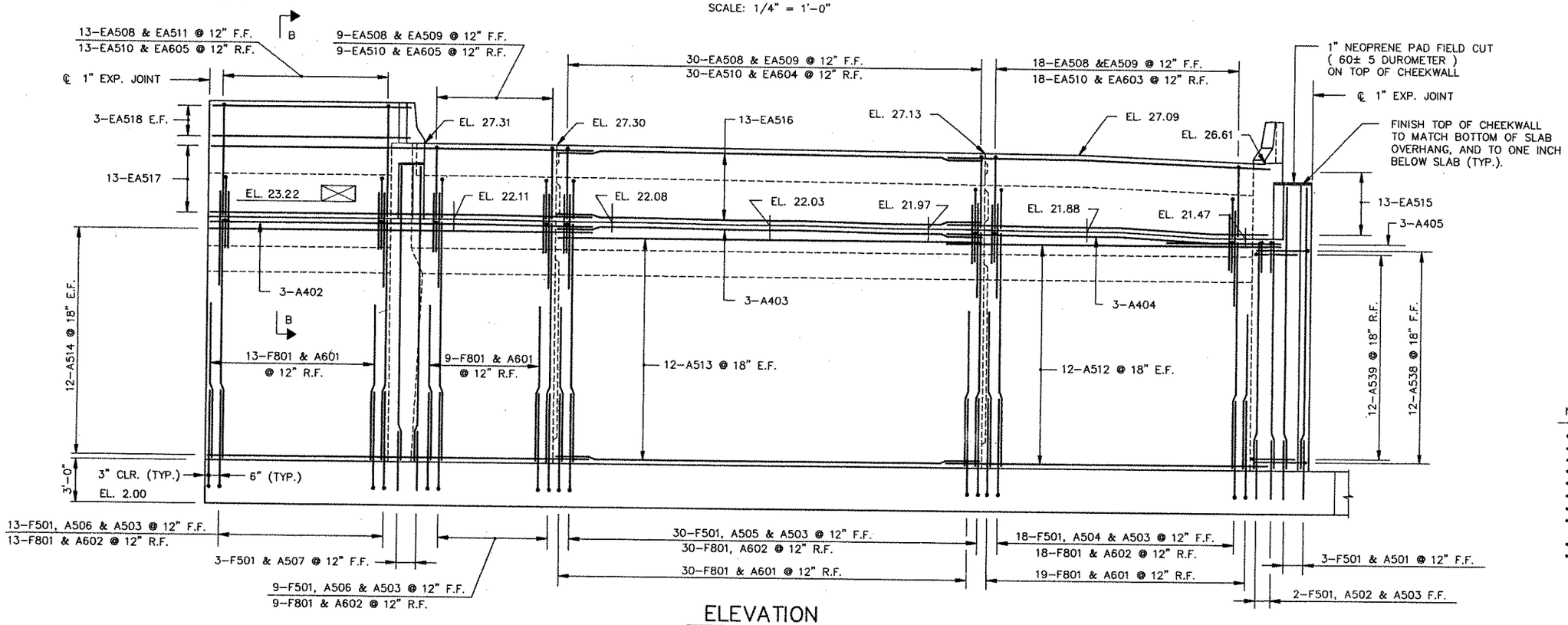

ELEVATION
SCALE: 1/4" = 1'-0"

C.I.P. TAPERED CONCRETE PILES ARE NOT SHOWN FOR CLARITY.

NOTES:

- FOR STAKE-OUT PLAN SEE DWG. NO. 37
- FOR FRAMING PLAN SEE DWG. NO. 62
- FOR FOOTING PLAN SEE DWG. NO. 40
- FOR DRAINAGE DETAIL SEE DWG. NO. 52
- FOR SECTIONS & ELEVATIONS SEE DWG. NO. 41
- FOR BAR LIST SEE DWG. NO. 53
- WORK THIS DWG. WITH DWG. NO. 38
- FOR LIMITS OF EXCAVATION AND BACKFILL SEE DWG. NO. 51
- FOR EXPANSION JOINT DETAILS SEE DWG. NO. 78
- FOR BEARING PAD DETAIL SEE DWG. NO. 41

DWG. NO.	CONTRACT	COUNTY	FEDERAL AID PROJECT No.	SHEET No.	TOTAL SHEETS
40	83-101-02	NEW CASTLE	F-1045 (26)	325	492

ROUTE 7 OVER
EAGLE RUN
3 SPAN CONT. COMP. P/S CONC. BOX BM. BRIDGE
FOOTING PLAN ABUTMENT 1

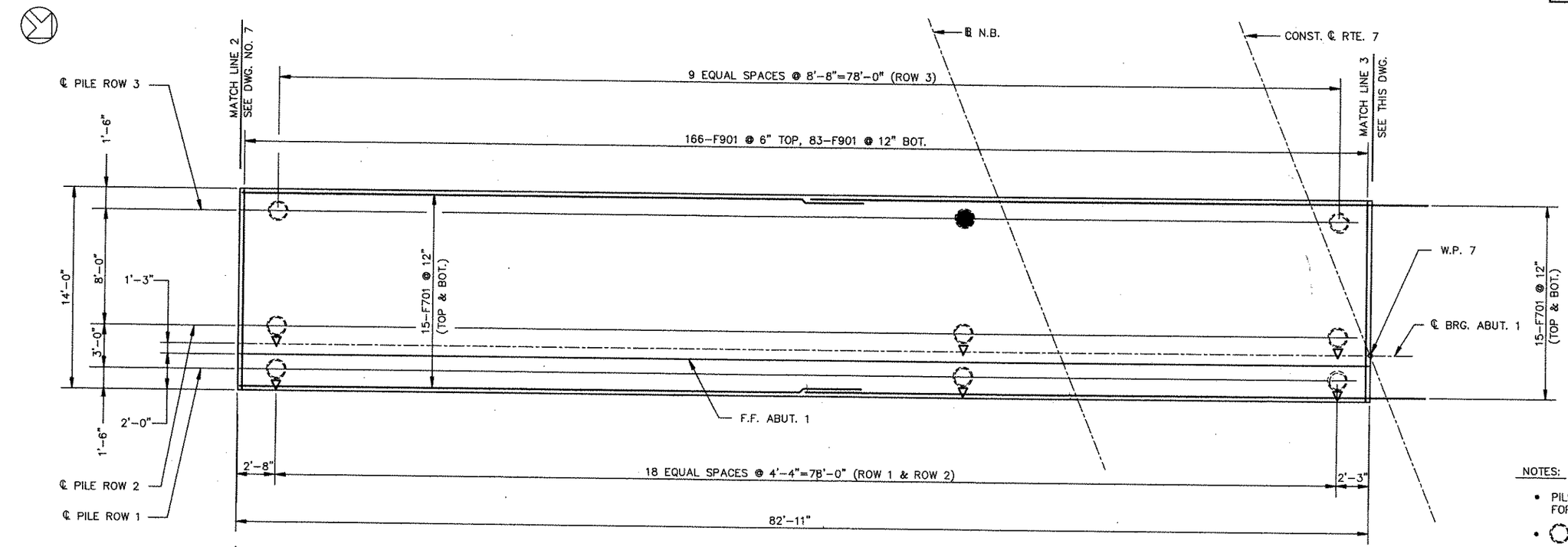

NOTES:

- PILES ARE 14"ø C.I.P. CONCRETE, CAPACITY = 60 T/PILE, FOR DETAIL SEE SHEET NO. 220
- ○ = VERTICAL PILES
- ◁○ = BATTERED PILES (3 : 12)
- ● = TEST PILES
- MINIMUM PILE TIP EL. -49.0
- FOR BAR LIST SEE DWG. NO. 53

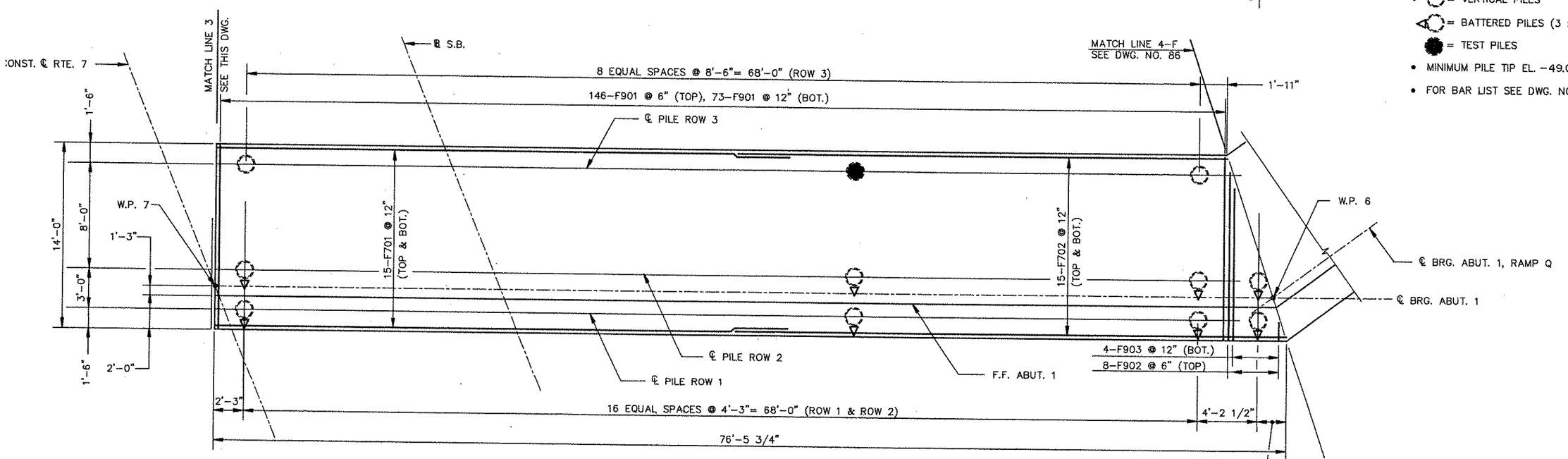

PLAN
SCALE: 1/4"=1'-0"

DWG. NO.	CONTRACT	COUNTY	FEDERAL AID PROJECT No.	SHEET No.	TOTAL SHEETS
41	83-101-02	NEW CASTLE	F-1045 (26)	326	492

ROUTE 7 OVER EAGLE RUN
3 SPAN CONT. COMP. P/S CONC. BOX BM. BRIDGE
ABUTMENT 1 DETAILS

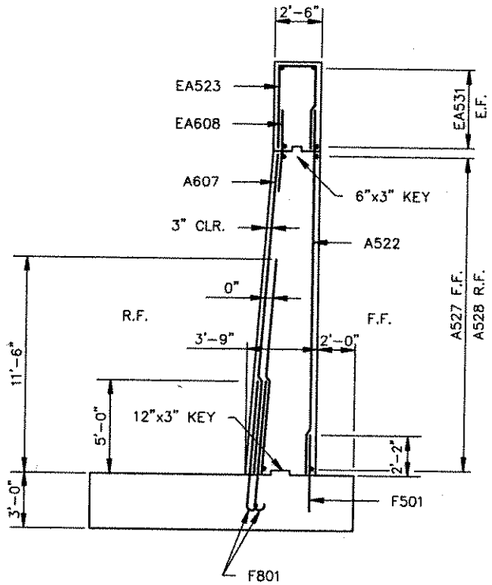

14"ø C.I.P. CONCRETE PILES ARE NOT SHOWN FOR CLARITY.
FOR FOOTING REINF. SEE FOOTING PLAN.

SECTION A–A
SCALE: 1/4" = 1'-0"

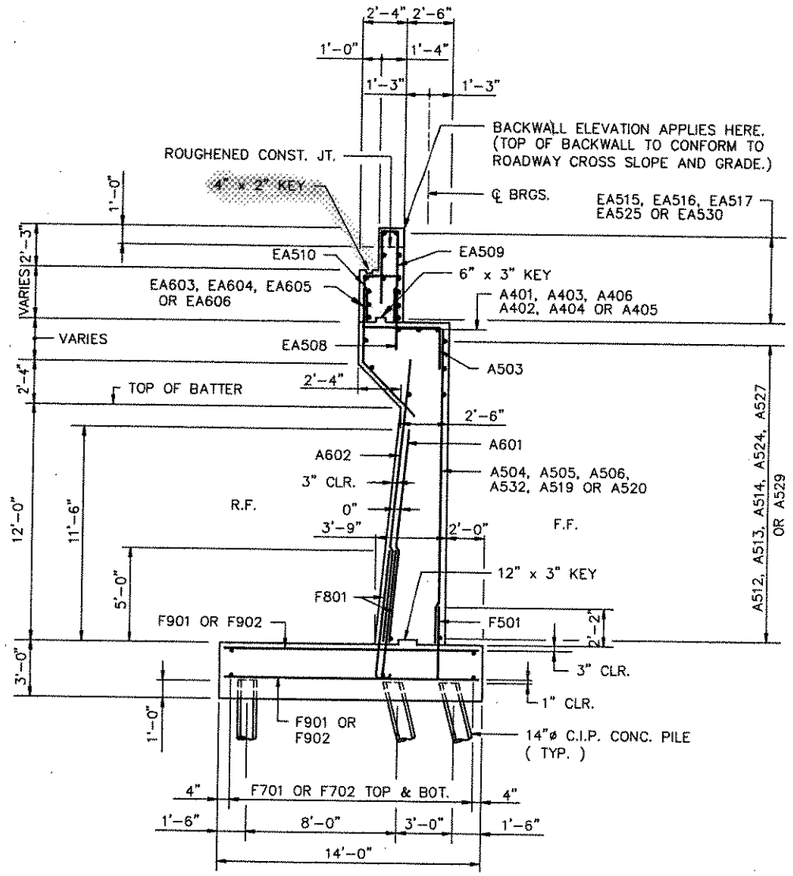

TYPICAL SECTION
SCALE: 1/4" = 1'-0"

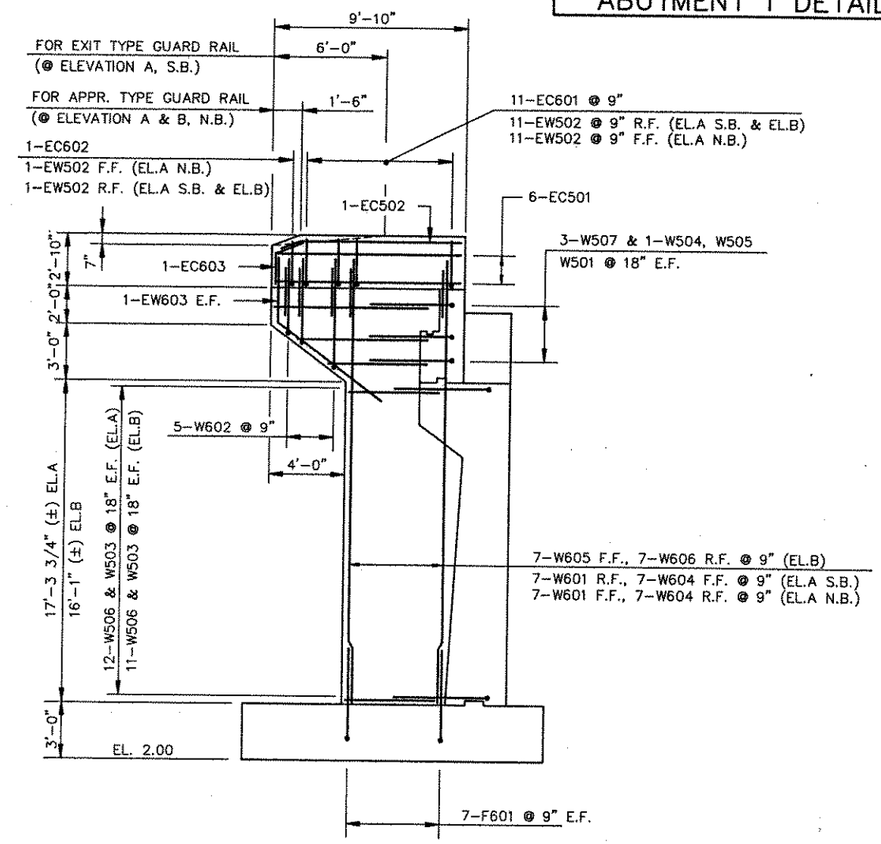

ELEVATION A (AS SHOWN)
ELEVATION B (SIMILAR U.N.)
SCALE: 1/4" = 1'-0"

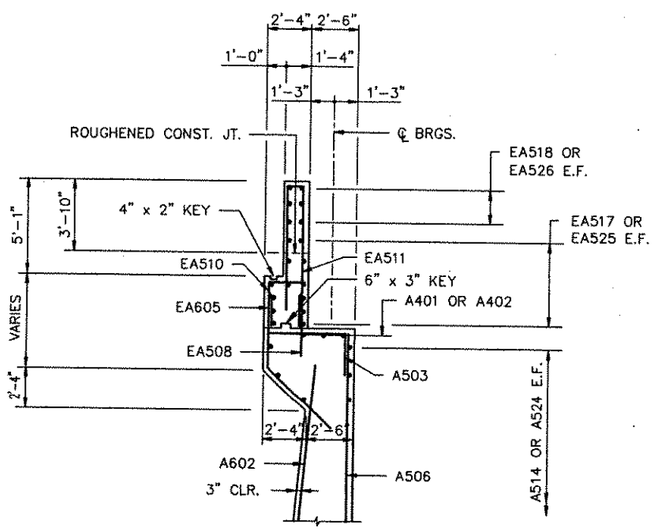

SECTION B–B
SCALE: 1/4" = 1'-0"

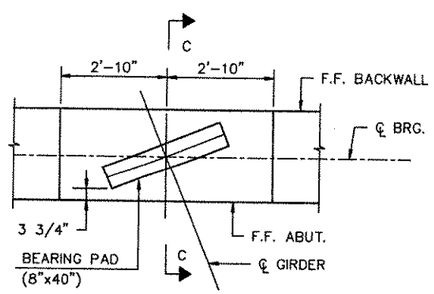

PLAN

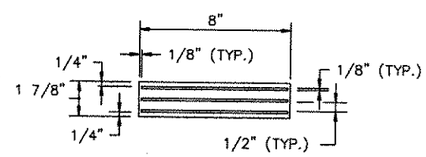

PAD SECTION
SCALE: 3" = 1'-0"

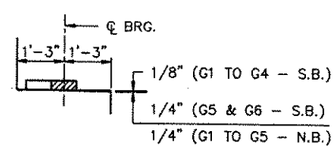

SECTION C – C

BEARING PAD DETAIL
SCALE: 1/2" = 1'-0"

NOTES:

- FOR ABUTMENT 1 SEE DWG. NO. 38 AND 39.
- FOR LOCATION OF SECTION A–A SEE DWG. NO. 38.
- FOR LOCATION OF SECTION B–B SEE DWG. NO. 38 AND 39.
- FOR LOCATION OF ELEVATIONS SEE DWG. NO. 38 AND 39.
- FOR BAR LIST SEE DWG NO. 53.

DWG. NO.	CONTRACT	COUNTY	FEDERAL AID PROJECT No.	SHEET No.	TOTAL SHEETS
42	83-101-02	NEW CASTLE	F-1045 (26)	327	492

ROUTE 7 OVER
EAGLE RUN
3 SPAN CONT. COMP. P/S CONC. BOX BM. BRIDGE
CHEEKWALLS – ABUT. 1

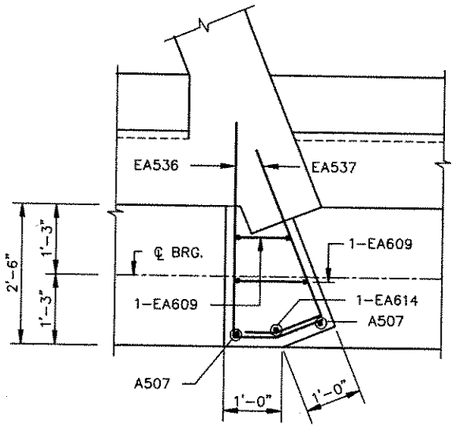

PLAN

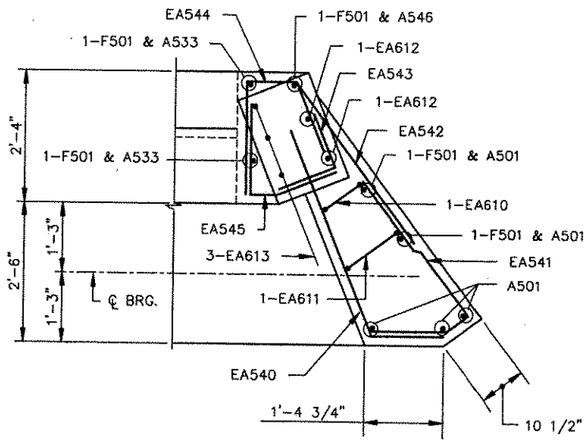

CORNER PLAN

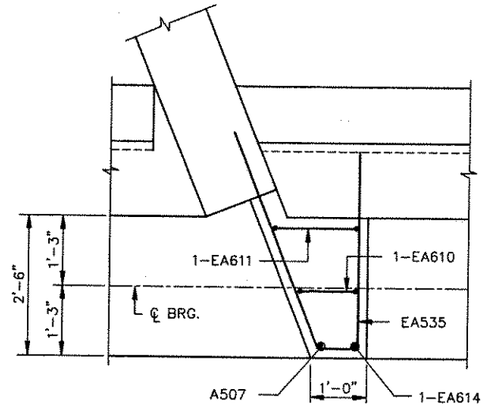

PLAN

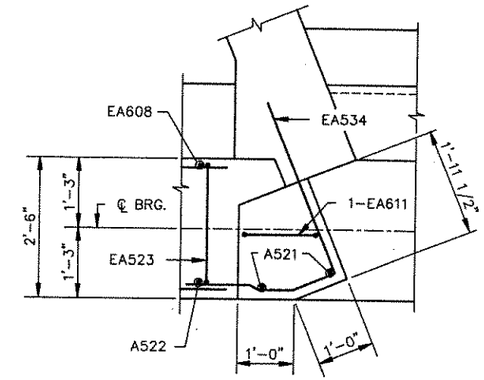

PLAN

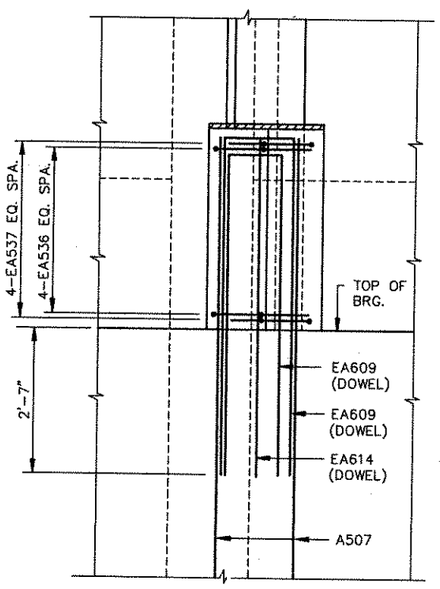

ELEVATION

CHEEKWALL AT G6 S.B.

SCALE: 3/4" = 1'-0"

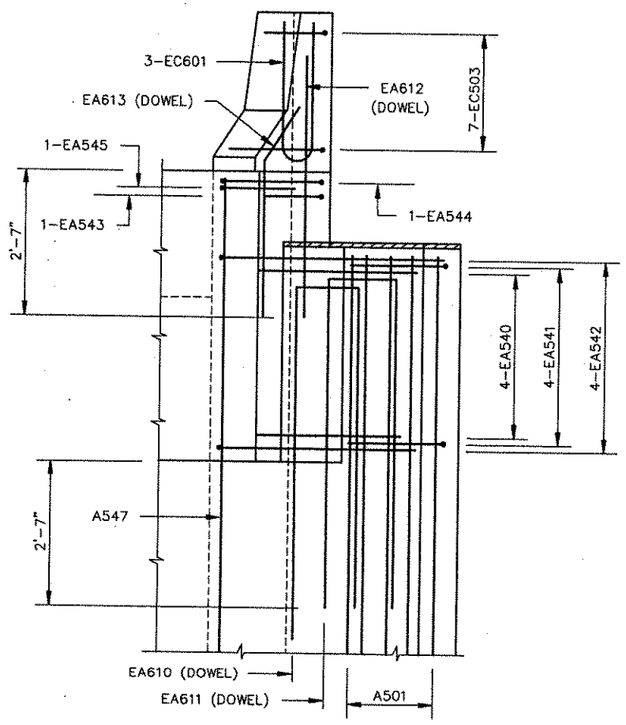

ELEVATION

CHEEKWALL & CORNER REINF.
AT G1 S.B.

SCALE: 3/4" = 1'-0"

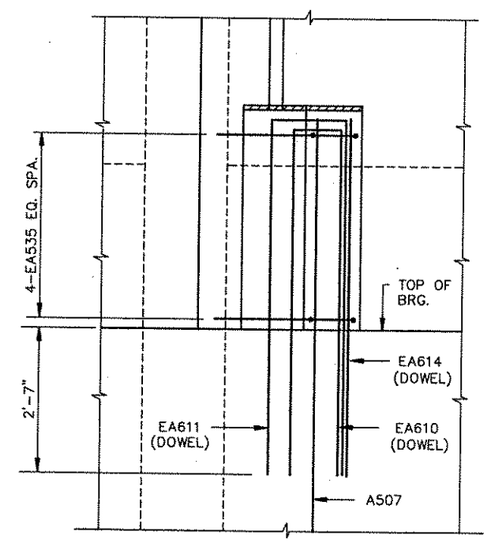

ELEVATION

CHEEKWALL AT G1 N.B.

SCALE: 3/4" = 1'-0"

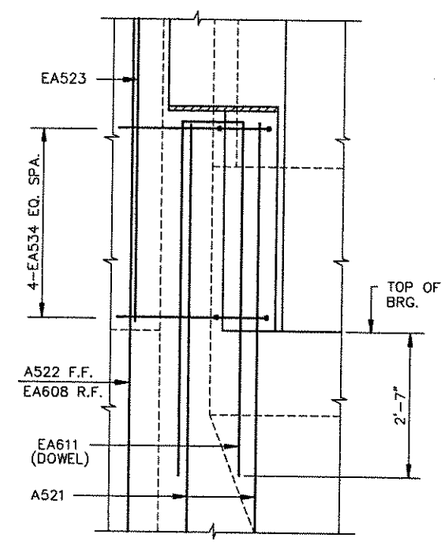

ELEVATION

CHEEKWALL AT G5 N.B.

SCALE: 3/4" = 1'-0"

N O T E : WORK THIS DWG. WITH DWG. NO. 38 & 39.

DWG. NO.	CONTRACT	COUNTY	FEDERAL AID PROJECT No.	SHEET No.	TOTAL SHEETS
43	83-101-02	NEW CASTLE	F-1045 (26)	328	492

ROUTE 7 OVER
EAGLE RUN
3 SPAN CONT. COMP. P/S CONC. BOX BM. BRIDGE
ABUTMENT 2 S.B.

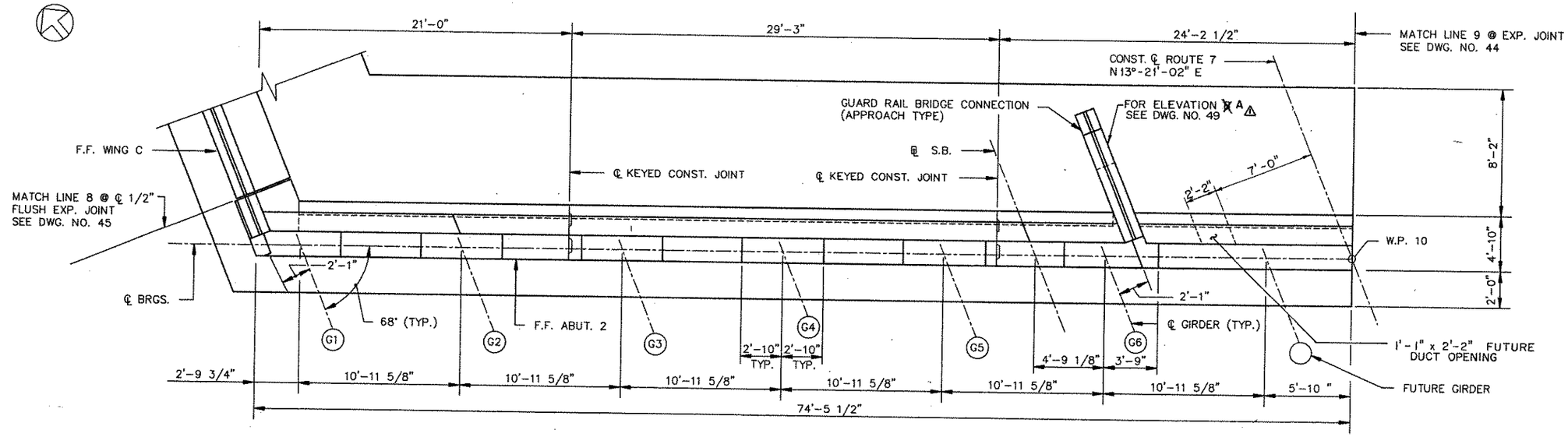

PLAN

SCALE: 1/4"=1'-0"

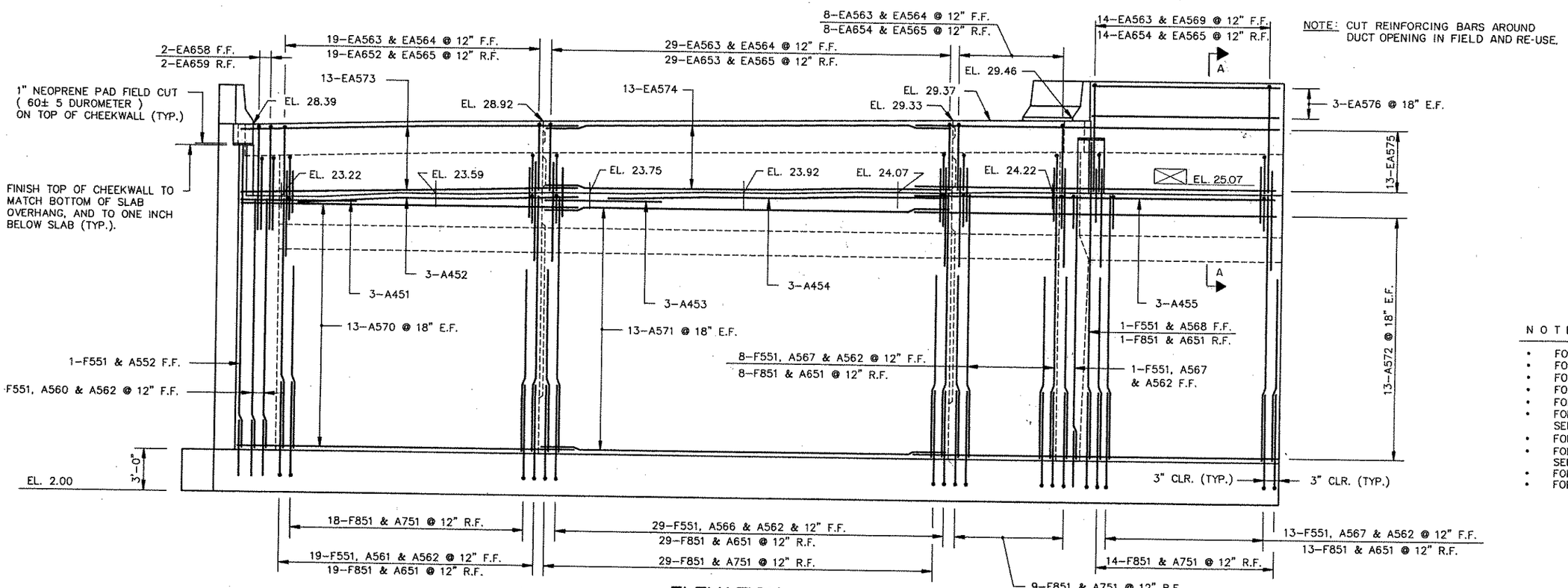

NOTE: CUT REINFORCING BARS AROUND DUCT OPENING IN FIELD AND RE-USE.

ELEVATION

SCALE: 1/4"=1'-0"

NOTES:

- FOR STAKE-OUT PLAN SEE DWG. NO. 37
- FOR FRAMING PLAN SEE DWG. NO. 62
- FOR FOOTING PLAN SEE DWG. NO. 47
- FOR DRAINAGE DETAIL SEE DWG. NO. 52
- FOR WING C SEE DWG. NO. 45
- FOR SECTION A-A AND ELEVATION A SEE DWG. NO. 49
- FOR BAR LIST SEE DWG. NO. 54
- FOR LIMITS OF EXCAVATION AND BACKFILL SEE DWG. NO. 51
- FOR EXPANSION JOINT DETAILS SEE DWG. NO. 78
- FOR BEARING PAD DETAIL SEE DWG. NO. 41

C.I.P. TAPERED CONCRETE PILES ARE NOT SHOWN FOR CLARITY.

DWG. NO.	CONTRACT	COUNTY	FEDERAL AID PROJECT No.	SHEET No.	TOTAL SHEETS
44	83-101-02	NEW CASTLE	F-1045 (26)	329	492

ROUTE 7 OVER
EAGLE RUN
3 SPAN CONT. COMP. P/S CONC. BOX BM. BRIDGE
ABUTMENT 2 N.B.

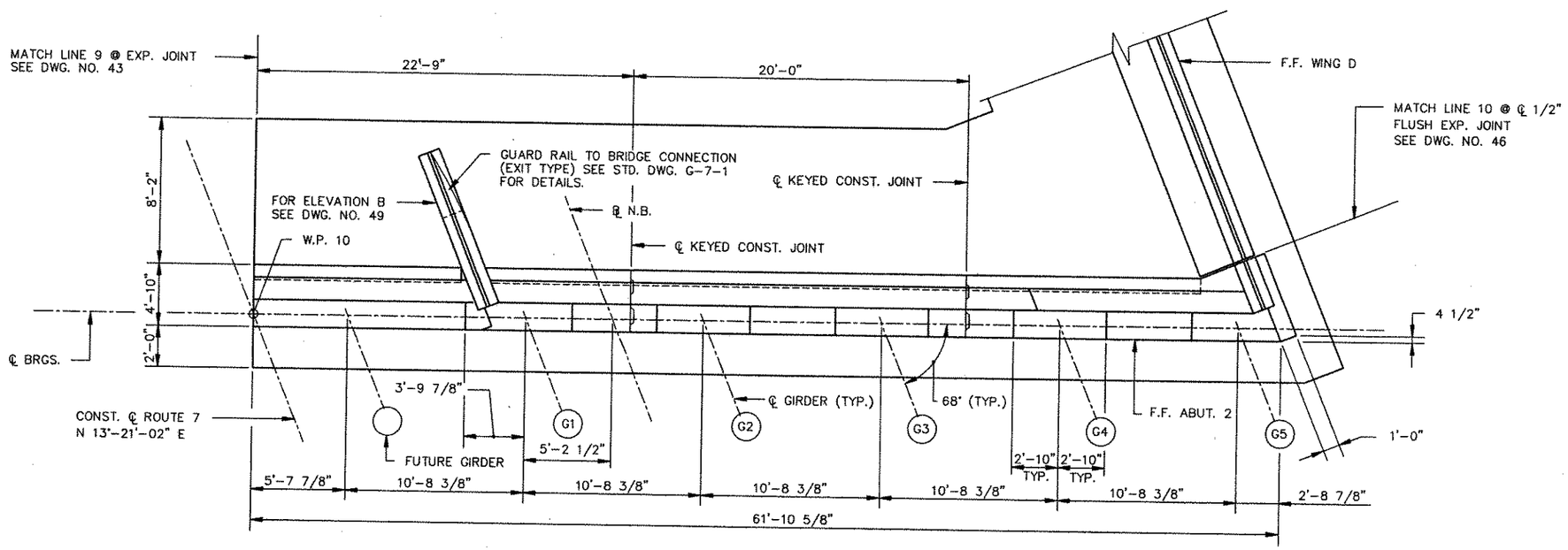

PLAN
SCALE: 1/4"=1'-0"

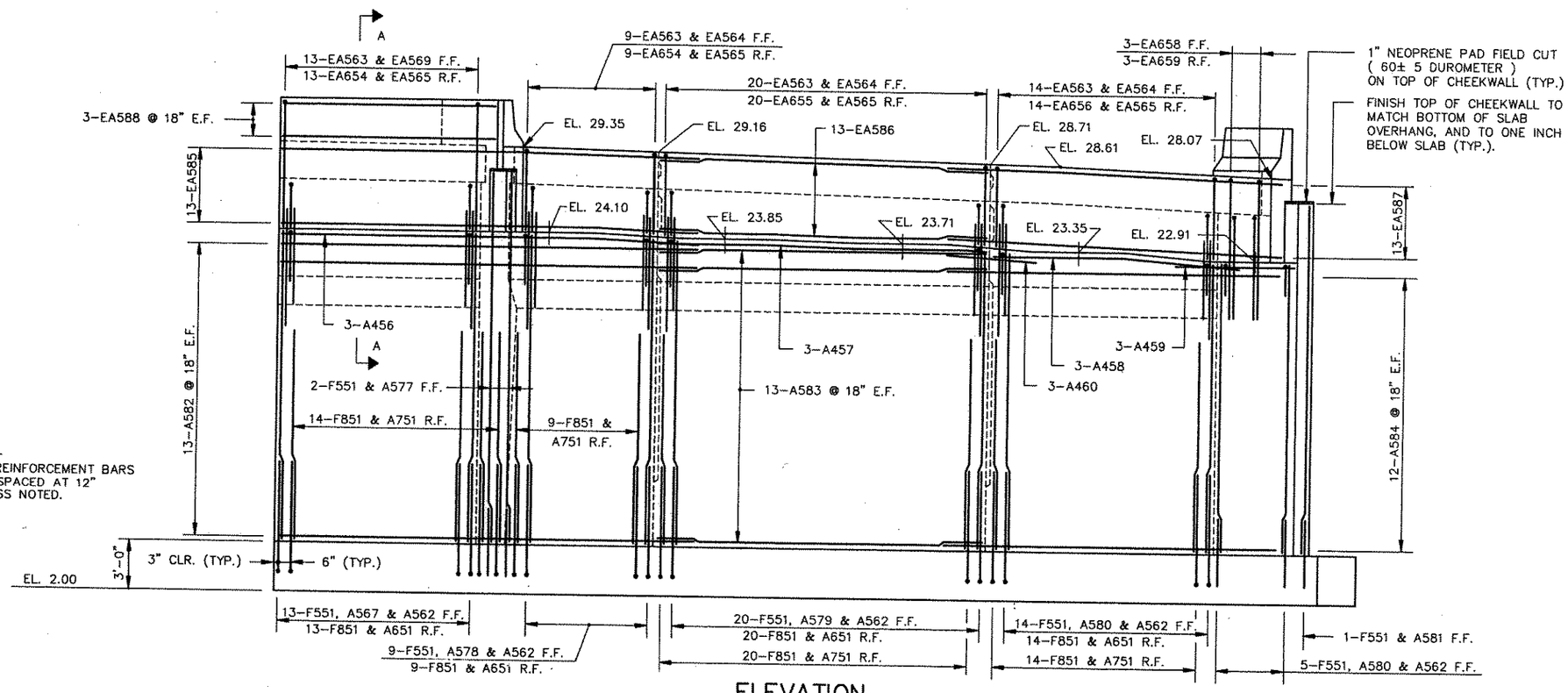

ELEVATION
SCALE: 1/4"=1'-0"

NOTE

ALL REINFORCEMENT BARS
ARE SPACED AT 12"
UNLESS NOTED.

ø C.I.P. TAPERED CONCRETE PILES ARE NOT SHOWN FOR CLARITY.

NOTES:

- FOR STAKE-OUT PLAN SEE DWG. NO. 37
- FOR FRAMING PLAN SEE DWG. NO. 63
- FOR FOOTING PLAN SEE DWG. NO. 48
- FOR DRAINAGE DETAIL SEE DWG. NO. 52
- FOR WING D SEE DWG. NO. 46
- FOR BAR LIST SEE DWG. NO. 54
- FOR SECTION A-A AND ELEVATION B SEE DWG. NO. 49
- FOR LIMITS OF EXCAVATION AND BACKFILL SEE DWG. NO. 51
- FOR EXPANSION JOINT DETAILS SEE DWG. NO. 78
- FOR BEARING PAD DETAIL SEE DWG. NO. 49
- WORK THIS DWG. WITH DWG. NO. 43

DWG NO.	CONTRACT	COUNTY	FEDERAL AID PROJECT No.	SHEET No.	TOTAL SHEETS
45	83-101-02	NEW CASTLE	F-1045(26)	330	492

ROUTE 7 OVER
EAGLE RUN
3 SPAN CONT. COMP. P/S CONC. BOX BM. BRIDGE
WING C S.B.

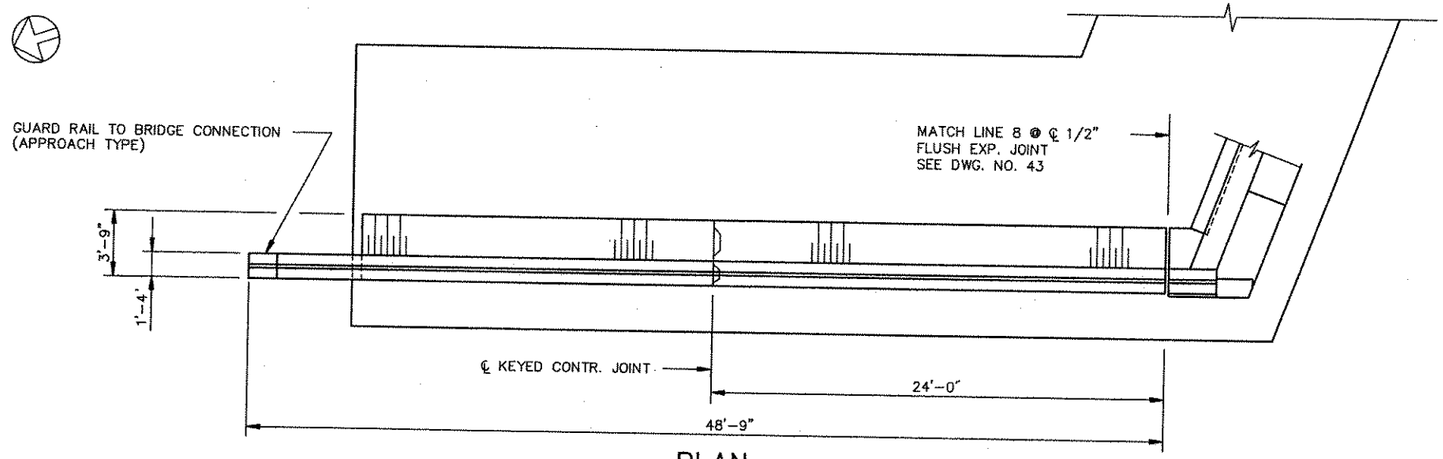

PLAN
SCALE: 1/4"=1'-0"

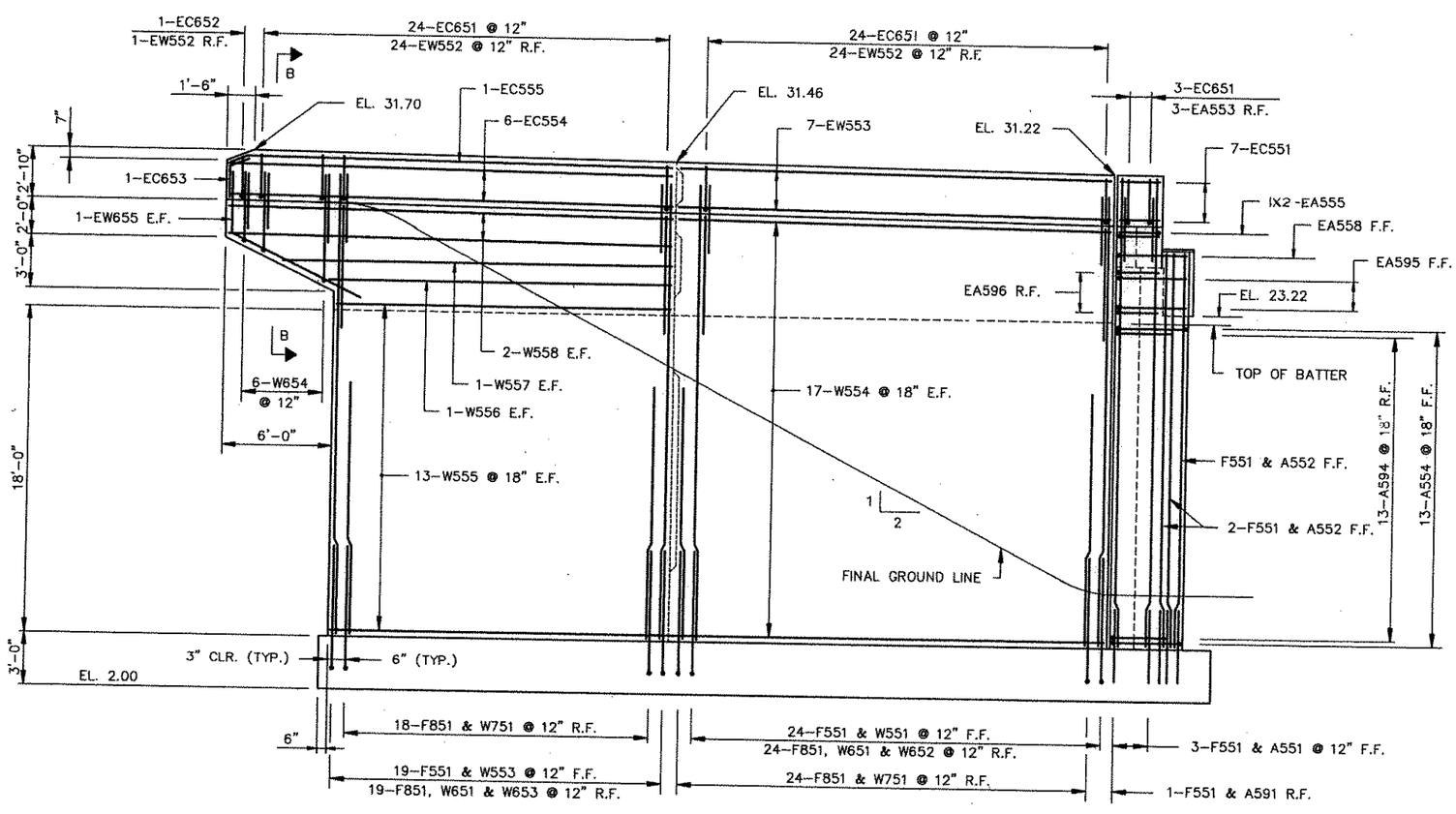

ELEVATION
SCALE: 1/4"=1'-0"

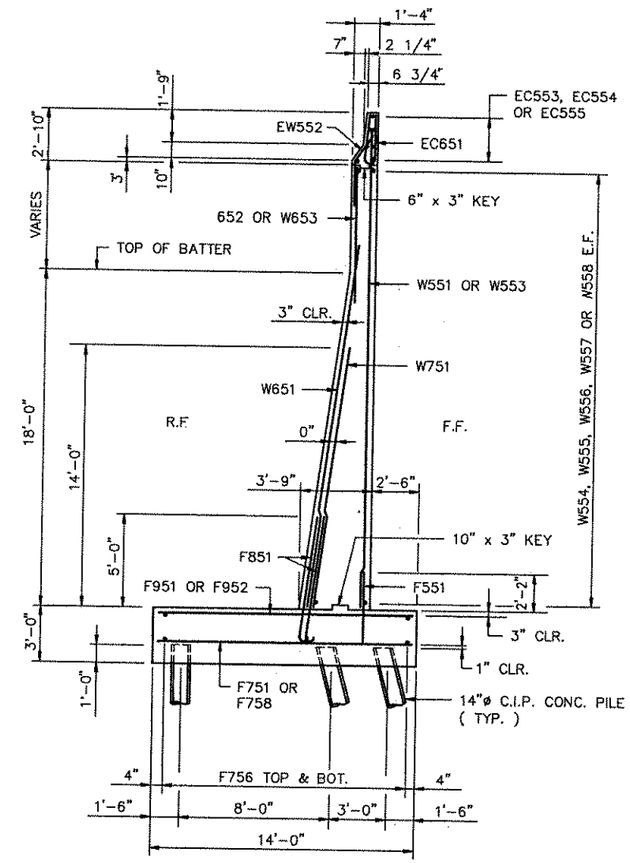

TYPICAL SECTION
SCALE: 1/4" = 1'-0"

NOTES:

- FOR ABUTMENT 2 PLANS SEE DWG. NO. 43
- FOR FOOTING PLAN SEE DWG. NO. 47
- FOR BAR LIST SEE DWG. NO. 55
- FOR SECTION B-B SEE DWG. NO. 49

* C.I.P. TAPERED CONCRETE PILES ARE NOT SHOWN FOR CLARITY.

DWG. NO.	CONTRACT	COUNTY	FEDERAL AID PROJECT No.	SHEET No.	TOTAL SHEETS
46	83-101-02	NEW CASTLE	F-1045 (26)	331	492

ROUTE 7 OVER
EAGLE RUN
3 SPAN CONT. COMP. P/S CONC. BOX BM. BRIDGE
WING D N.B.

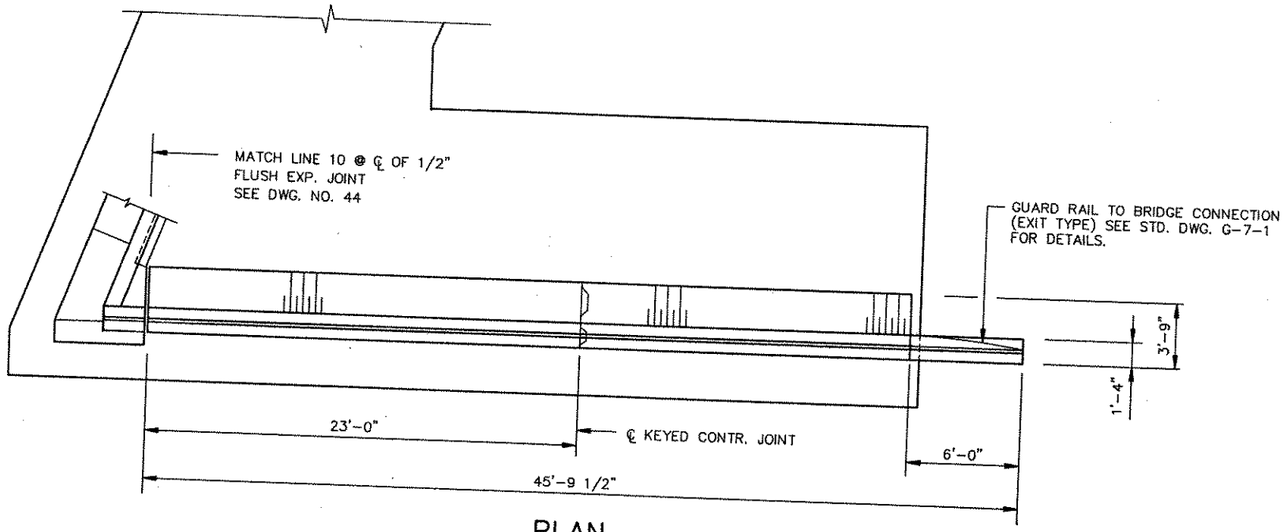

PLAN
SCALE: 1/4"=1'-0"

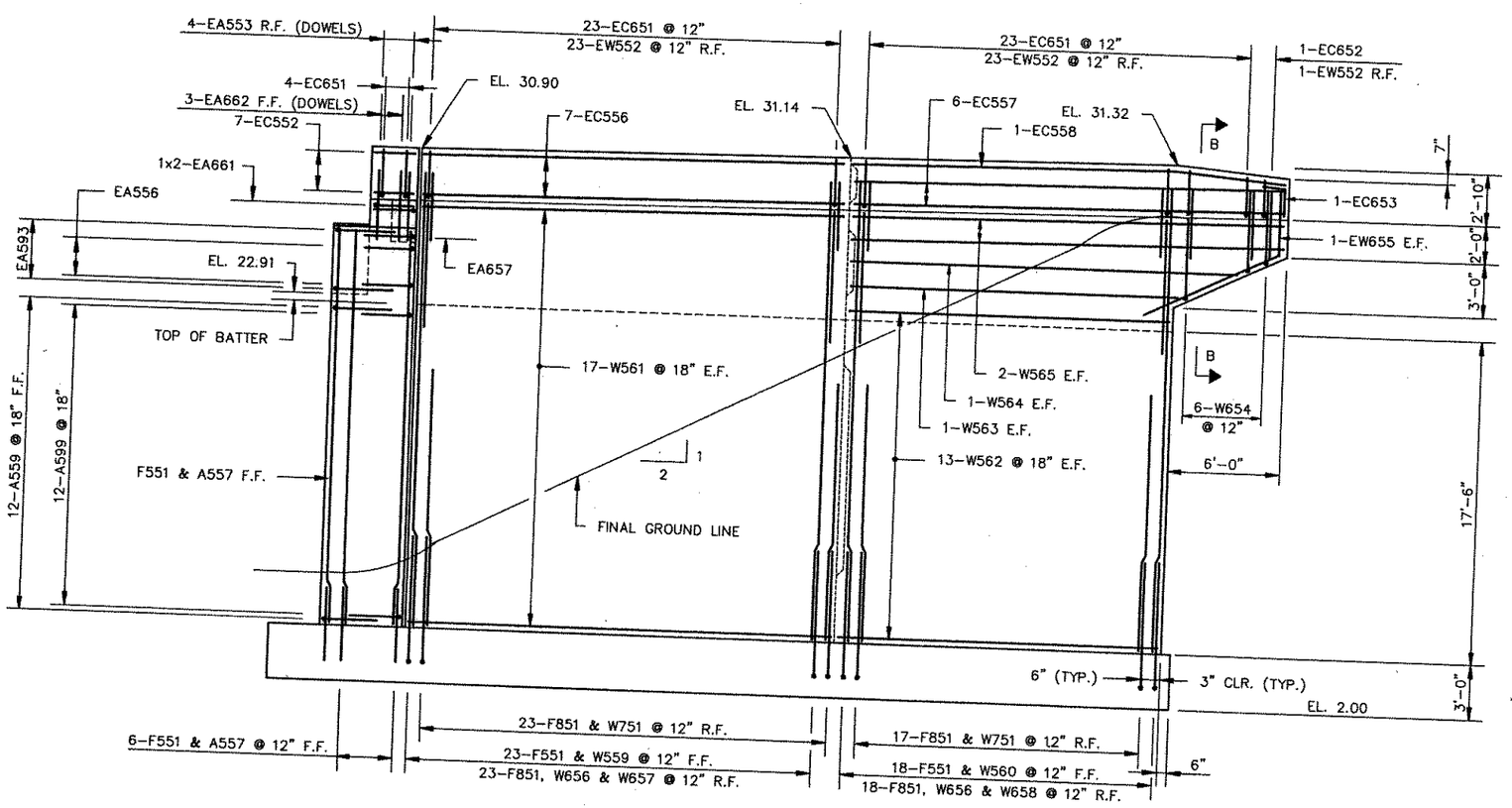

ELEVATION
SCALE: 1/4"=1'-0"

.I.P. TAPERED CONCRETE PILES ARE NOT SHOWN FOR CLARITY.

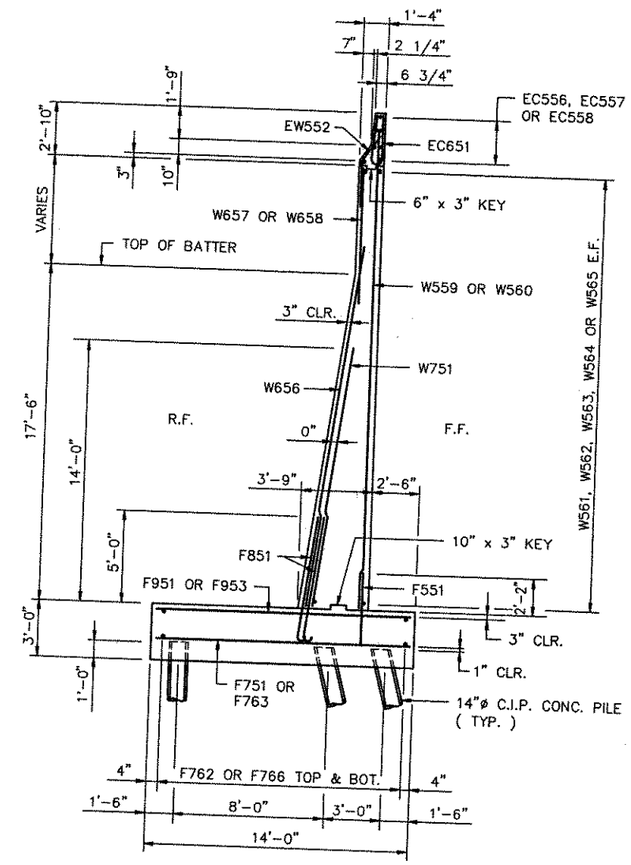

TYPICAL SECTION
SCALE: 1/4" = 1'-0"

NOTES

- FOR ABUTMENT 2 PLANS SEE DWG. NO. 44
- FOR FOOTING PLAN SEE DWG. NO. 48
- FOR BAR LIST SEE DWG. NO. 55
- FOR SECTION B-B SEE DWG. NO. 49

DWG. NO.	CONTRACT	COUNTY	FEDERAL AID PROJECT No.	SHEET No.	TOTAL SHEETS
47	83-101-02	NEW CASTLE	F-1045 (26)	332	492

ROUTE 7 OVER
EAGLE RUN
3 SPAN CONT. COMP. P/S CONC. BOX BM. BRIDGE
FOOTING PLAN ABUTMENT 2 S.B.

NOTE:
FOR NOTES SEE DWG. NO. 48

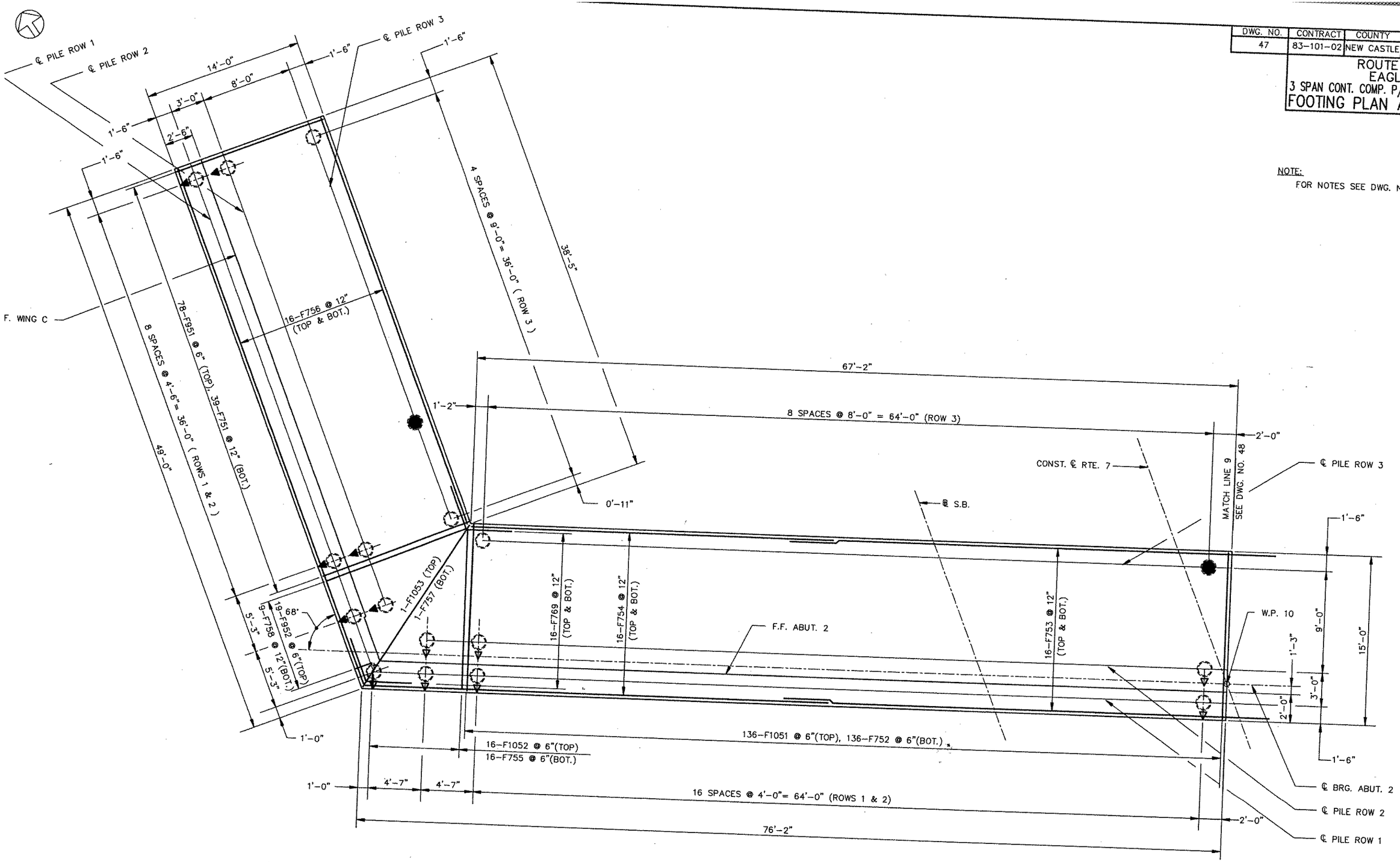

PLAN
SCALE: 1/4"=1'-0"

DWG. NO.	CONTRACT	COUNTY	FEDERAL AID PROJECT No.	SHEET No.	TOTAL SHEETS
48	83-101-02	NEW CASTLE	F-1045 (26)	333	492

ROUTE 7 OVER EAGLE RUN
3 SPAN CONT. COMP. P/S CONC. BOX BM. BRIDGE
FOOTING PLAN ABUTMENT 2 N.B.

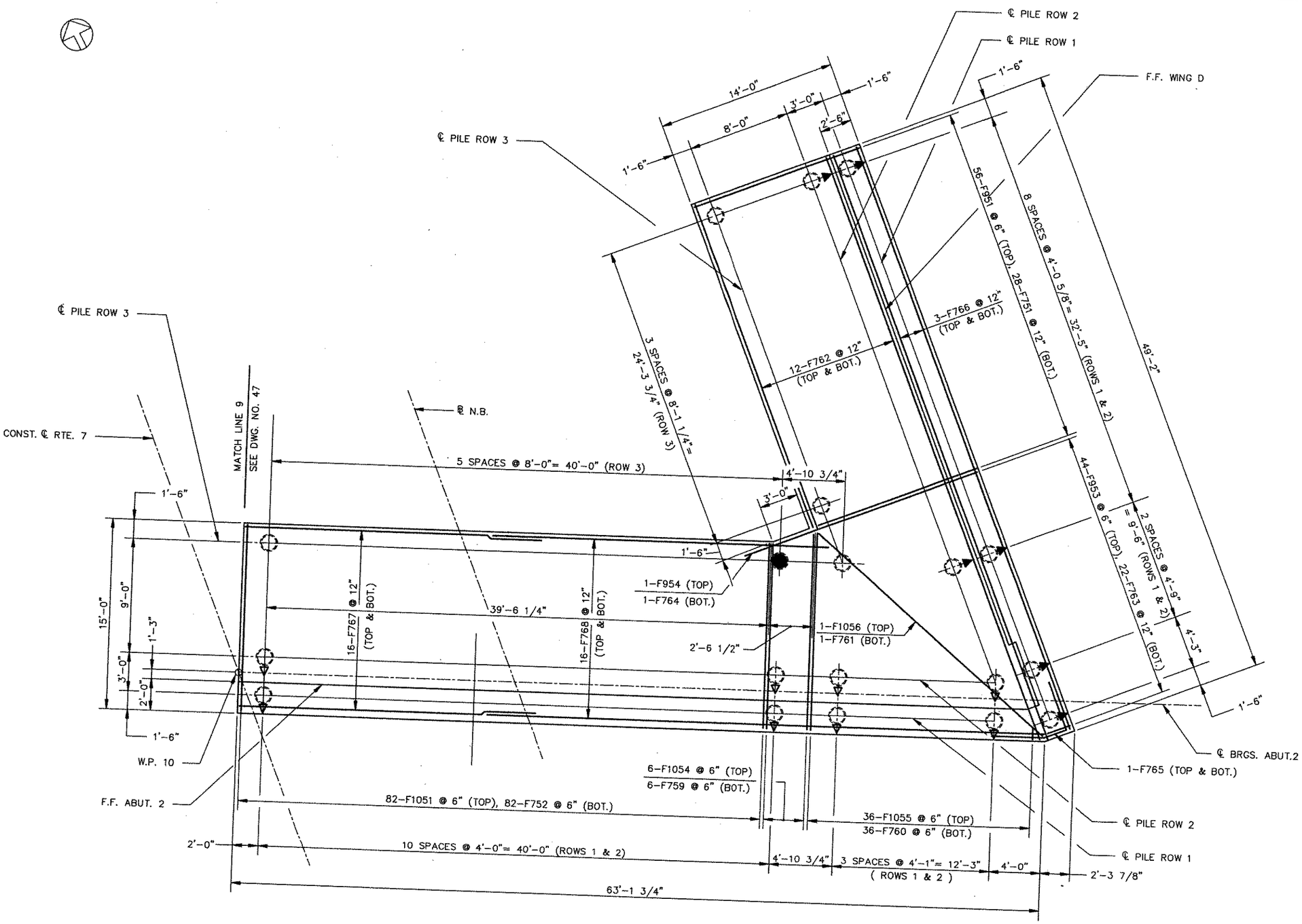

PLAN
SCALE: 1/4"=1'-0"

NOTES:

- PILES ARE 14"ø C.I.P. CONCRETE, CAPACITY = 60 T/PILE, FOR DETAIL SEE SHEET NO. 220
- ◯ = VERTICAL PILES
- ◀◯ = BATTERED PILES (3 1/2: 12)
- △◯ = BATTERED PILES (3 : 12)
- ● = TEST PILES
- FOR MIN. PILE TIP ELEVATIONS SEE GENERAL PLAN, DWG. NO. 33
- FOR BAR LIST SEE DWG. NO. 54

DWG. NO.	CONTRACT	COUNTY	FEDERAL AID PROJECT No.	SHEET No.	TOTAL SHEETS
49	83-101-02	NEW CASTLE	F-1045 (26)	334	492

ROUTE 7 OVER EAGLE RUN
3 SPAN CONT. COMP. P/S CONC. BOX BM. BRIDGE
ABUTMENT 2 DETAILS

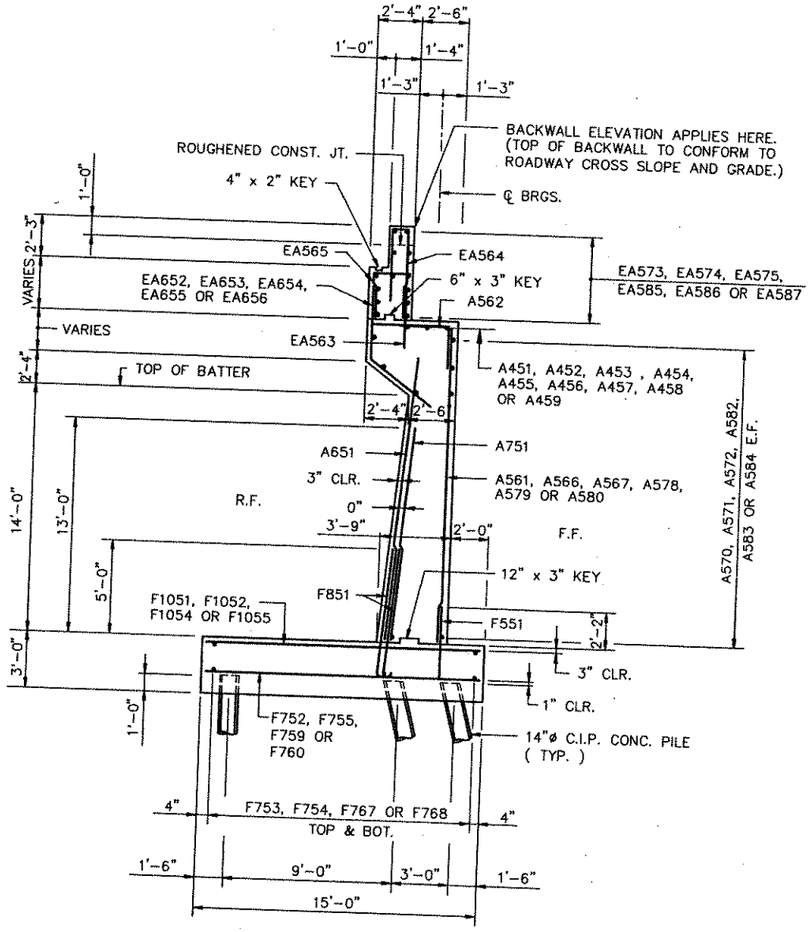

TYPICAL SECTION

SCALE: 1/4" = 1'-0"

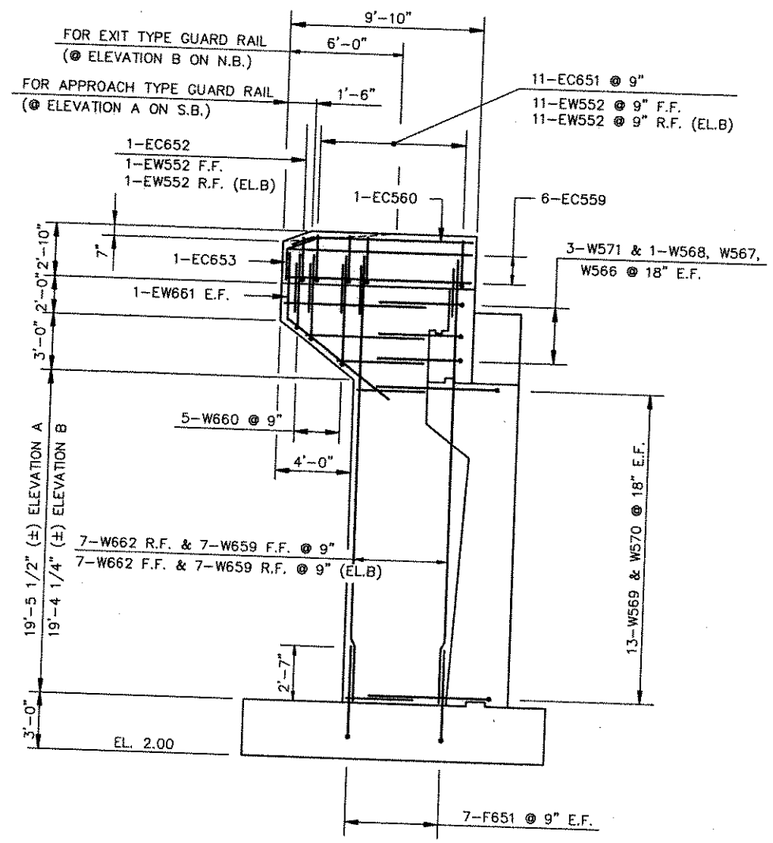

ELEVATION A (AS SHOWN)

ELEVATION B (SIMILAR U.N.)

SCALE: 1/4" = 1'-0"

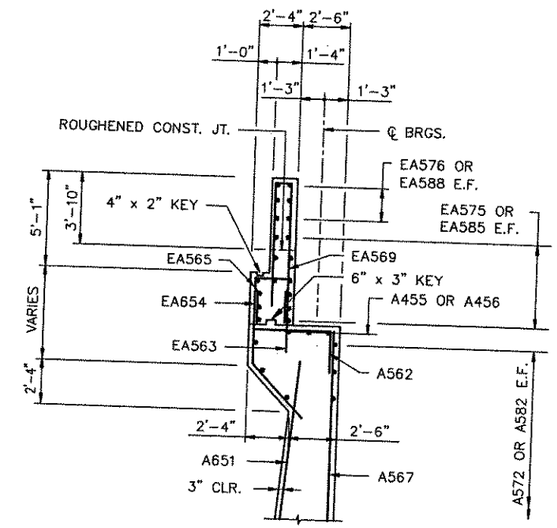

SECTION A-A

SCALE: 1/4" = 1'-0"

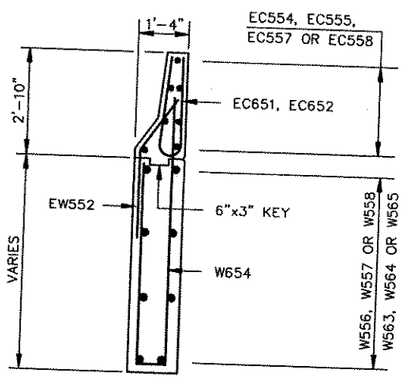

SECTION B - B

SCALE: 1/2" = 1'-0"

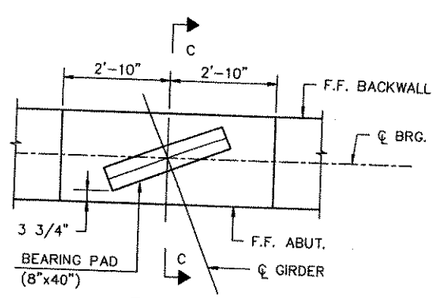

PLAN

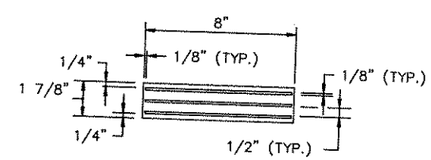

PAD SECTION

SCALE: 3" = 1'-0"

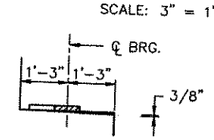

SECTION C - C

BEARING PAD DETAIL

SCALE: 1/2" = 1'-0"

NOTES

- FOR ABUTMENT 2 SEE DWG. NO. 43 & 44
- FOR LOCATION OF SECTION A-A SEE DWG. NO. 43 & 44
- FOR LOCATION OF ELEVATION A AND B SEE DWG. NO. 43 & 44
- FOR LOCATION OF SECTION B-B SEE DWG. NO. 45 & 46

DWG. NO.	CONTRACT	COUNTY	FEDERAL AID PROJECT No.	SHEET No.	TOTAL SHEETS
50	83-101-02	NEW CASTLE	F-1045 (26)	335	492

ROUTE 7 OVER
EAGLE RUN
3 SPAN CONT. COMP. P/S CONC. BOX BM. BRIDGE
CHEEKWALLS – ABUT. 2

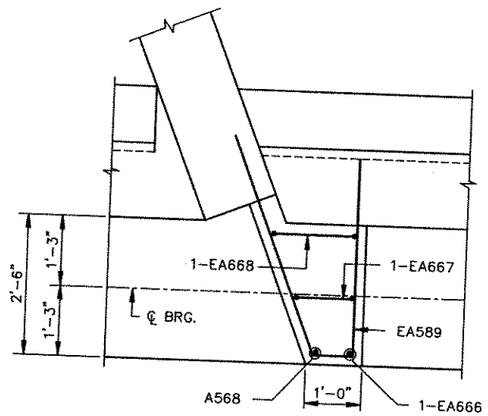

PLAN

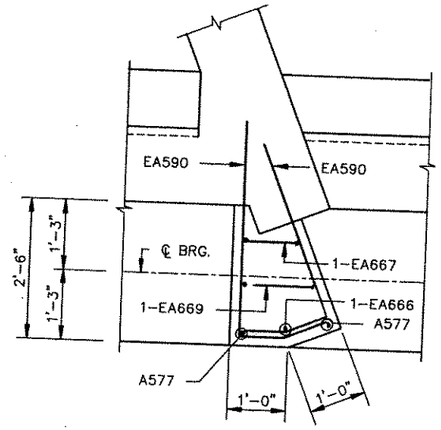

PLAN

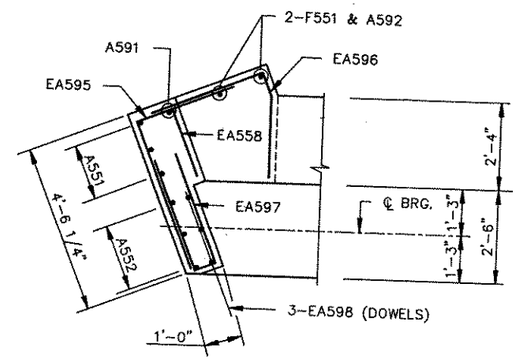

SECTION A – A

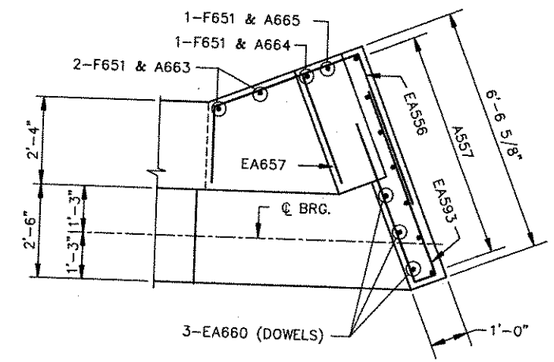

SECTION B – B

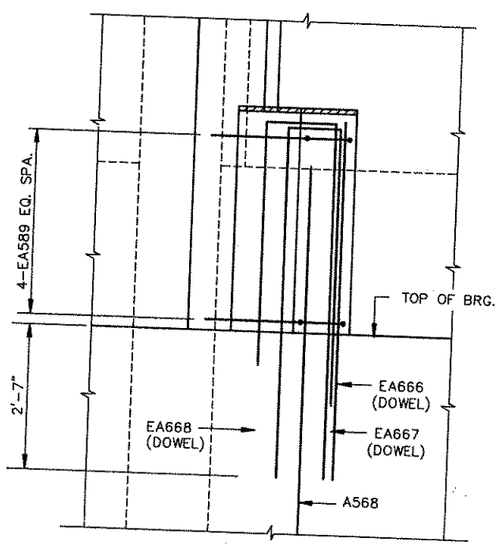

ELEVATION

CHEEKWALL AT G6 S.B.

SCALE: 3/4" = 1'-0"

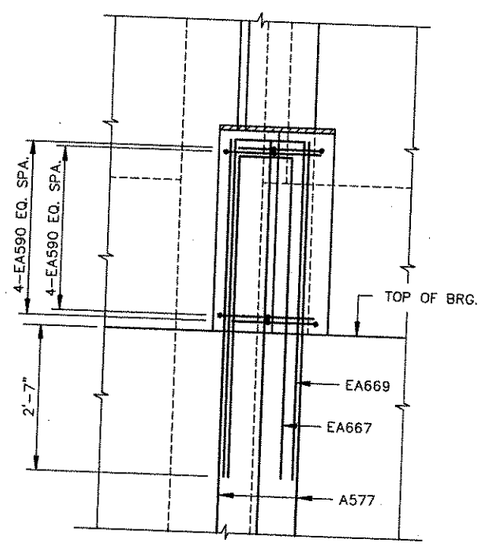

ELEVATION

CHEEKWALL AT G1 S.B.

SCALE: 3/4" = 1'-0"

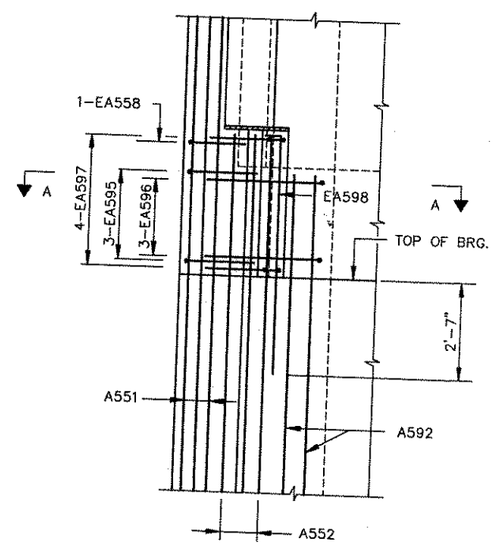

ELEVATION

CHEEKWALL & CORNER REINF.
WING C

SCALE: 1/2" = 1'-0"

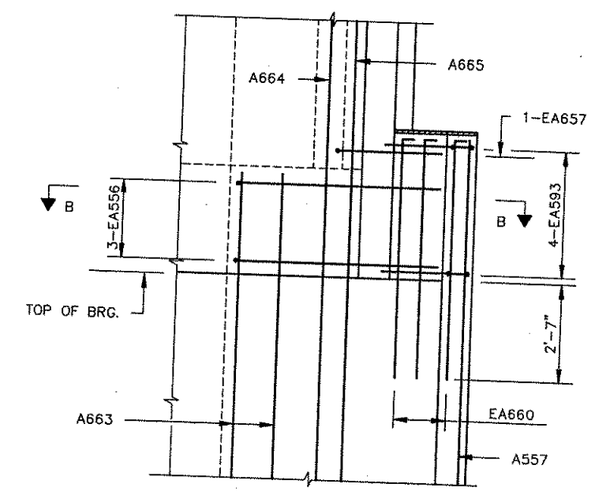

ELEVATION

CHEEKWALL & CORNER REINF.
WING D

SCALE: 1/2" = 1'-0"

NOTE: WORK THIS DWG. WITH DWG. NO. 43 & 44.

DWG. NO.	CONTRACT	COUNTY	FEDERAL AID PROJECT No.	SHEET No.	TOTAL SHEETS
51	83-101-02	NEW CASTLE	F-1045 (26)	336	492

ROUTE 7 OVER
EAGLE RUN
3 SPAN CONT. COMP. P/S CONC. BOX BM. BRIDGE
PAY LIMIT DETAILS

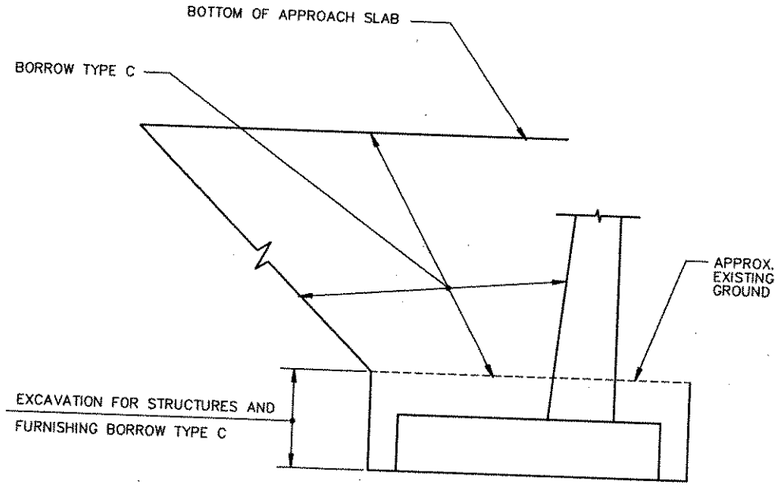

ABUTMENT 1
N.T.S.

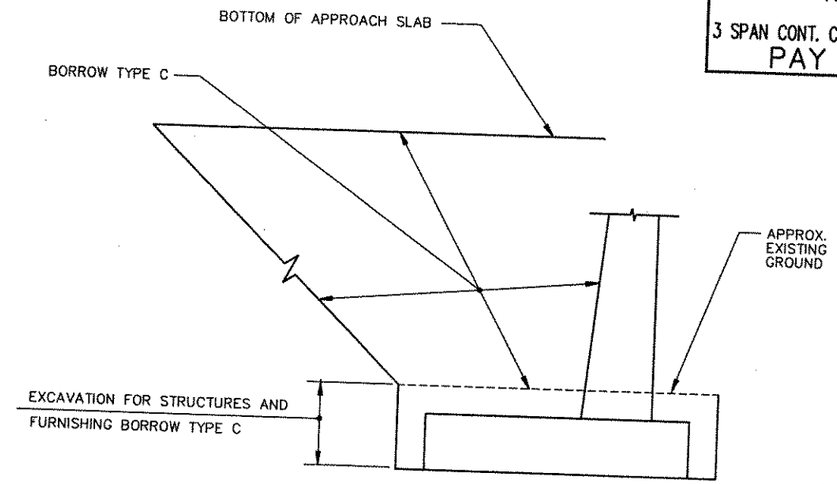

ABUTMENT 2
N.T.S.

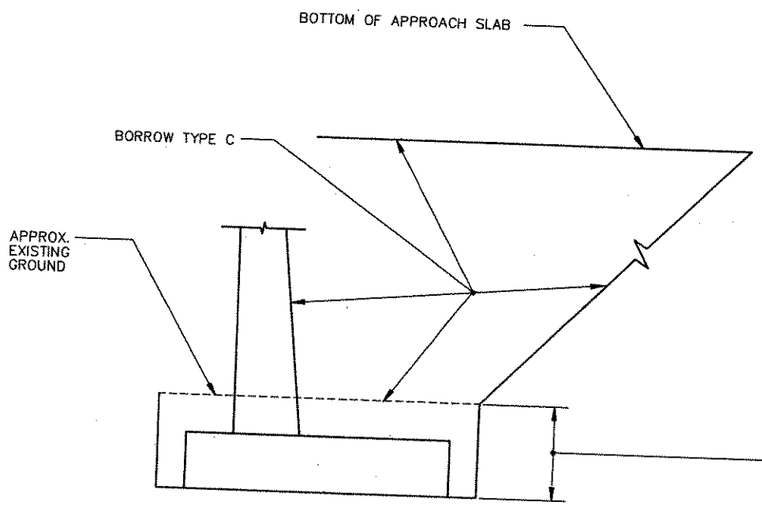

WING C
N.T.S.

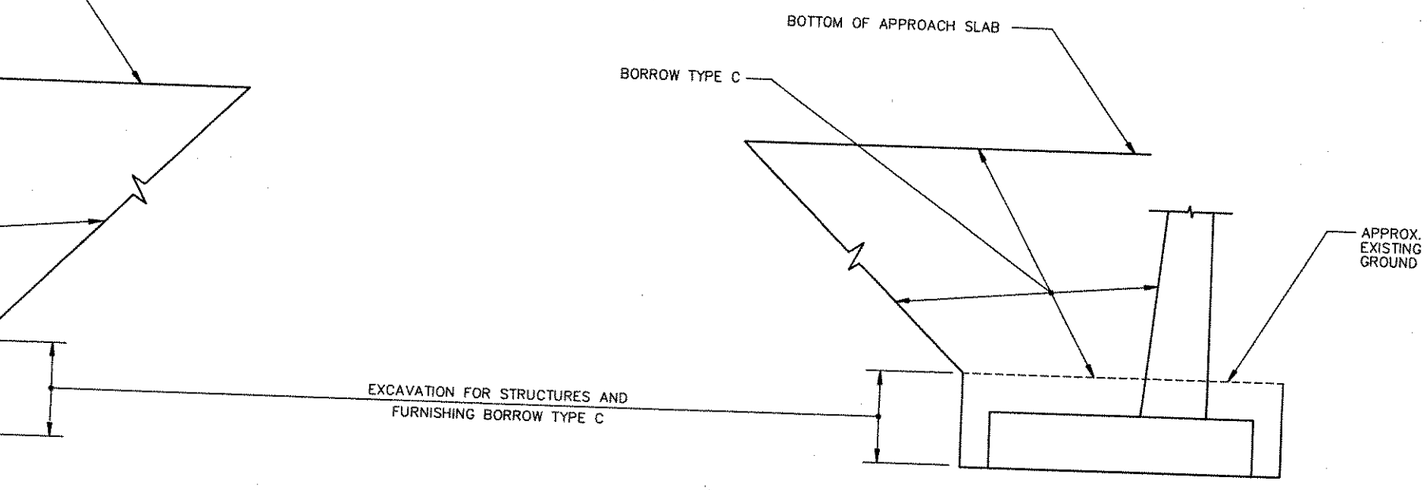

WING D
N.T.S.

NOTE: • FOR GENERAL NOTES AND TABLE OF QUANTITIES SEE DWG. NO. 35

DWG. NO.	CONTRACT	COUNTY	FEDERAL AID PROJECT No.	SHEET No.	TOTAL SHEETS
52	83-101-02	NEW CASTLE	F-1045 (26)	337	492

ROUTE 7 OVER
EAGLE RUN
3 SPAN CONT. COMP. P/S CONC. BOX BM. BRIDGE
SUBSTRUCTURE UNDERDRAIN DETAILS

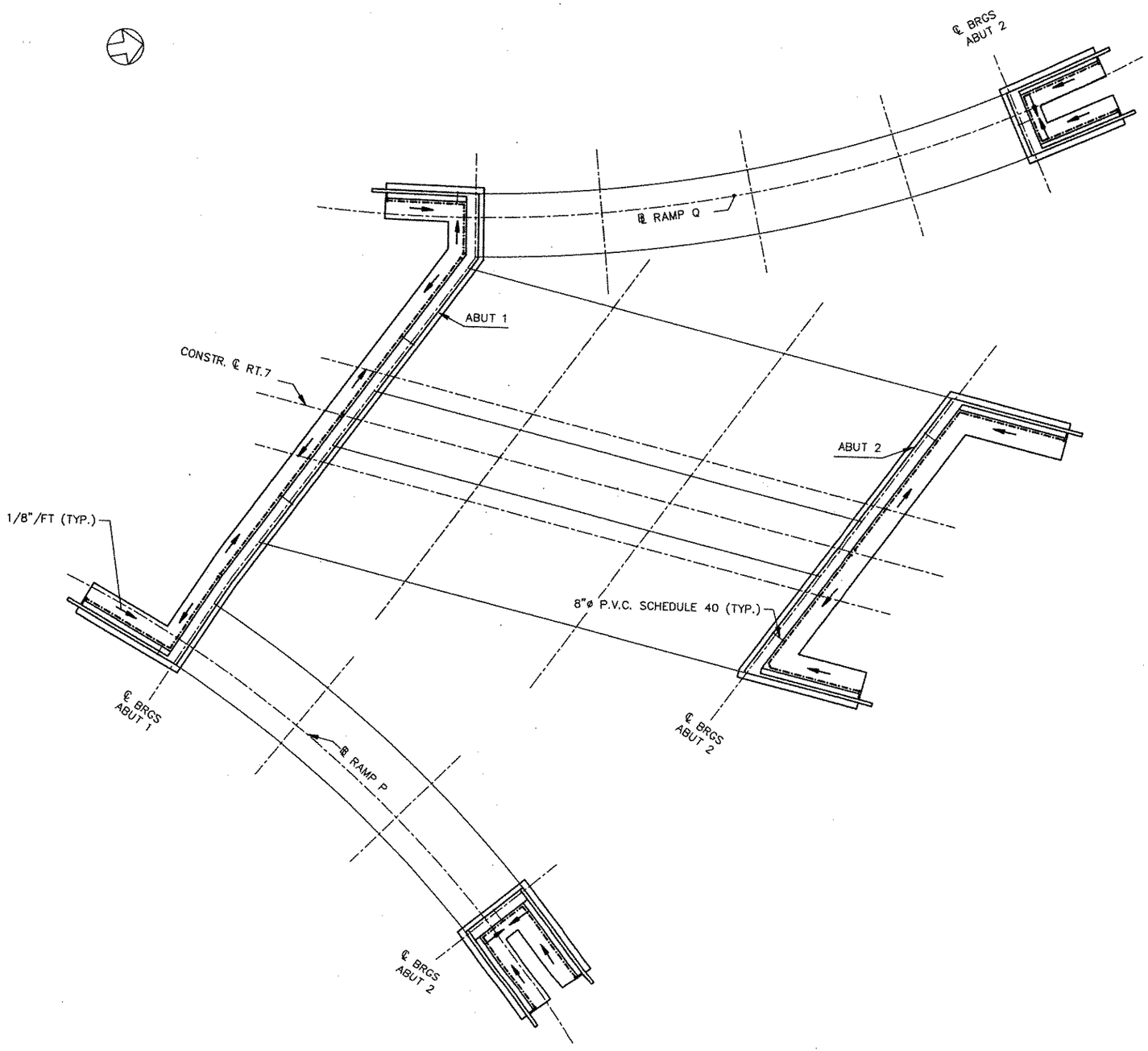

PLAN
SCALE: 1"=20'-0"

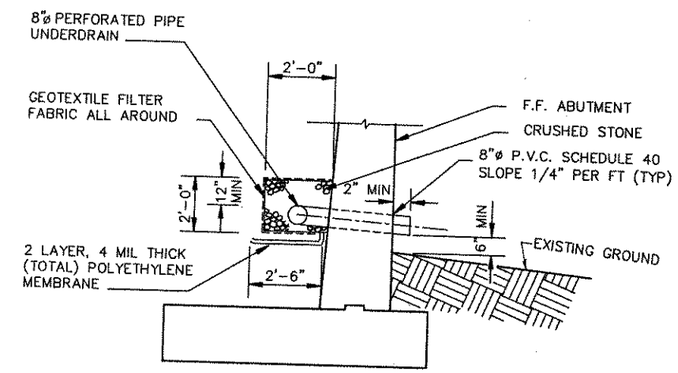

UNDERDRAIN DETAIL
SCALE: 1/4" = 1'-0"

REINFORCEMENT BAR SCHEDULE

DWG. NO.	CONTRACT	COUNTY	FEDERAL AID PROJECT No.	SHEET No.	TOTAL SHEETS
53	83-101-02	NEW CASTLE	F-1045 (26)	338	492

ROUTE 7 OVER
EAGLE RUN
3 SPAN CONT. COMP. P/S CONC. BOX BM. BRIDGE
ABUTMENT 1 BAR LIST

K	SIZE	LENGTH	NO.	TYPE	A	B	C	D	E	F	G	H	J	K	R	REMARKS
				ABUTMENT 1												
1	5	9'-6"	18	STR												
2	5	9'-6"	3	(19)	1'-5"	8'-1"										
3	5	1'-8"	7	STR								0'-6"				
1	6	5'-7"	36	(18)	2'-5"	0'-9"	2'-5"									
2	6	5'-1"	3	(18)	2'-2"	0'-9"	2'-2"							0'-3"	0'-3"	
3	6	3'-6"	3	(19)	1'-5"	2'-1"								0'-2 3/4"	0'-3"	
												0'-6"				
	4	25'-0"	3	STR												
	4	26'-2"	3	STR												
	4	29'-5"	6	STR												
	4	17'-0"	3	(19)	5'-6"	11'-6"										
	4	8'-0"	3	STR								0'-11 1/2"				
	4	10'-6"	3	STR												
	5	19'-11 1/2"	5	STR												
	5	16'-2"	2	STR												
	5	6'-10"	136	(4)	4'-4"	2'-6"	0'-0"									
	5	16'-3" TO 16'-7"	18	STR								0'-0"				
	5	16'-9"	30	STR												EACH VARY BY 1/4"
	5	16'-10"	38	STR												
	5	20'-8 1/2"	4	STR												
	5	4'-4"	129	STR												
	5	9'-5"	102	(8)	0'-0"	3'-7"	1'-0"	4'-10"								
	5	4'-8"	129	(4)	2'-8"	2'-0"	0'-0"									
	5	15'-2"	27	(8)	0'-0"	6'-5"	1'-0"	7'-9"				0'-0"				
	5	22'-3"	24	STR												
	5	29'-5"	47	STR												
	5	26'-2"	24	STR												
	5	21'-9"	13	STR												
	5	29'-5"	26	STR												
	5	26'-2"	13	STR												
	5	14'-0"	6	STR												
	5	16'-1" TO 16'-8"	30	STR												
	5	15'-8"	8	STR												EACH VARY BY 1/4"
	5	19'-6"	2	STR												
	5	18'-6"	20	STR												
	5	11'-9"	20	(8)	0'-0"	4'-10"	2'-1"	4'-10"								
	5	25'-4"	24	STR												
	5	25'-4"	13	STR												
	5	14'-0"	6	STR												
	5	31'-10"	11	STR												
	5	20'-2"	11	STR												
	5	11'-2"	11	STR												
	5	11'-3"	13	STR												
	5	19'-8"	10	STR												
	5	16'-9 1/2"	7	STR												
	5	21'-4"	2	STR												
		7'-3"	4	(5)	3'-6"	0'-9"	3'-0"									
		8'-7"	4	(5)	3'-6"	0'-9"	4'-4"						2'-9 3/8"			
		5'-3"	4	(5)	3'-9"	0'-9"	0'-9"						1'-7 1/2"			
		4'-10"	4	(5)	3'-4"	0'-9"	0'-9"						0'-8 3/8"			
		7'-8 1/2"	12	(5)	3'-8"	0'-6 1/2"	3'-6"						0'-8 3/8"			
		8'-2"	12	(5)	3'-6"	1'-0"	3'-8"						2'-10"			
		5'-6"	4	(19)	4'-3"	1'-3"							1'-4 1/2"			
		5'-5 1/2"	4	(5)	3'-8"	0'-6 1/2"	1'-3"				3'-11 1/4"					
		6'-8"	4	(5)	2'-0"	1'-0"	3'-8"						1'-0"			
		2'-7"	1	(4)	1'-0"	1'-7"	0'-0"									
		4'-7"	1	(5)	2'-0"	1'-0"	1'-7"				0'-0"					
		3'-5"	1	(5)	1'-10"	0'-7"	1'-0"						0'-7"			
		23'-9"	1	STR									0'-11 1/4"			

MARK	SIZE	LENGTH	NO.	TYPE	A	B	C	D	E	F	G	H	J	K	R	REMARKS
A601	6	12'-0"	143	STR												
A602	6	15'-0"	129	STR												
EA603	6	9'-0"	18	(19)	4'-3"	4'-9"										
EA604	6	9'-1"	30	(19)	4'-3"	4'-10"						3'-0"				
EA605	6	9'-3"	73	(19)	4'-3"	5'-0"						3'-0"				
EA606	6	8'-6"	8	(19)	4'-3"	4'-3"						3'-0"				
A607	6	15'-7"	20	STR								3'-0"				
EA608	6	5'-0"	20	(19)	2'-6"	2'-6"										
EA609	6	13'-7" TO 13'-2"	2	(5)	6'-2"		6'-2"					0'-7 5/8"				
EA610	6	13'-4"	2	(5)	6'-2"	1'-0"	6'-2"							0'-0"		1. VARY B BY 5"
EA611	6	13'-9"	3	(5)	6'-2"	1'-5"	6'-2"							0'-0"		
EA612	6	4'-9"	2	STR										0'-0"		
EA613	6	3'-10"	3	(19)	1'-2"	2'-8"										
EA614	6	6'-2"	2	STR								0'-7"				
W501	5	7'-0"	6	STR												
EW502	5	3'-8"	36	(19)	1'-2"	2'-6"										
W503	5	3'-3"	70	STR								0'-7"				
W504	5	4'-5"	6	STR												
W505	5	6'-5"	6	STR												
W506	5	5'-3"	70	(2)	0'-7"	4'-8"										
W507	5	4'-3"	18	(2)	0'-7"	3'-8"					0'-0"		0'-5"			
											0'-0"		0'-5"			
W601	6	22'-1"	14	STR												
W602	6	7'-6" TO 11'-10"	15	(8)	4'-4" TO 6'-6"	1'-0"	2'-2" TO 4'-4"	0'-0"								3. VARY A AND C BY 6 1/2"
EW603	6	11'-0"	6	(19)	7'-0"	4'-0"										
W604	6	24'-5"	14	STR								5'-7 1/4"				
W605	6	23'-3"	7	STR												
W606	6	20'-10"	7	STR												
F501	5	4'-6"	155	STR												
F601	6	5'-7"	42	(2)	0'-8"	4'-11"					0'-0"		0'-6"			
F701	7	45'-6"	90	STR												
F702	7	30'-6" TO 34'-10"	30	STR												2. EACH VARY BY 3 3/4"
F801	8	8'-2"	303	(2)	0'-11"	7'-3"					0'-0"		0'-8"			
F901	9	13'-6"	468	STR												
F902	9	1'-3" TO 13'-0"	8	STR												EACH VARY BY 1'-8"
F903	9	1'-3" TO 11'-4"	4	STR												EACH VARY BY 3'-4"

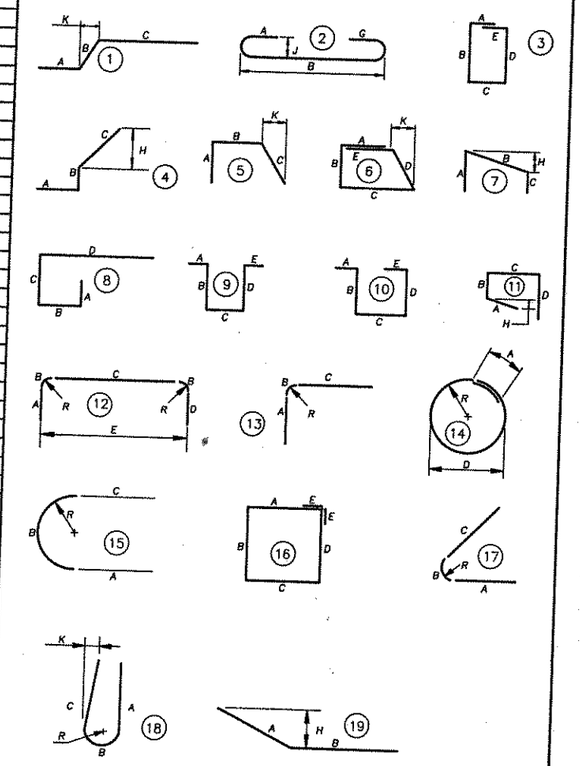

- *All dimensions are out to out of bar except "A" and "G" on standard 135° and 180° hooks, and "R" which is shown to the inside of the bar.*
- *Figures in circles show types.*
- *Prefix "E" indicates epoxy coated reinforcement.*

REINFORCEMENT BAR SCHEDULE

DWG. NO.	CONTRACT	COUNTY	FEDERAL AID PROJECT No.	SHEET No.	TOTAL SHEETS
54	83-101-02	NEW CASTLE	F-1045 (26)	339	492

ROUTE 7 OVER
EAGLE RUN
3 SPAN CONT. COMP. P/S CONC. BOX BM. BRIDGE
ABUTMENT 2 BAR LIST

SIZE	LENGTH	NO.	TYPE	A	B	C	D	E	F	G	H	J	K	R	REMARKS
				ABUTMENT 2											
5	2'-2"	7	STR												
5	3'-2"	7	STR												
6	5'-7"	7	(18)	2'-5"	0'-9"	2'-5"							0'-3"	0'-3"	
4	7'-6"	3	STR												
4	19'-3"	3	(19)	7'-0"	12'-3"										
4	8'-0"	3	STR								0'-8"				
4	24'-6"	3	(19)	7'-0"	17'-6"										
4	25'-1"	3	STR								0'-8"				
4	26'-0"	3	(19)	6'-6"	19'-6"										
4	19'-8"	3	(19)	2'-2"	17'-6"						0'-7 1/2"				
4	15'-0"	3	(19)	7'-0"	8'-0"						0'-2 1/2"				
4	7'-0"	3	STR								0'-8"				
4	4'-6"	3	STR												
5	25'-3"	3	STR												
5	21'-9"	3	STR												
5	3'-8"	7	(19)	1'-2"	2'-6"										
5	9'-5"	13	(5)	3'-0"	4'-3"	2'-2"					0'-11 1/2"				
5	4'-8"	2	(5)	1'-10"	1'-0"	1'-10"						0'-10"			
5	10'-4"	3	(5)	4'-4"	4'-0"	2'-0"						0'-0"			
5	21'-5 1/2"	7	STR									0'-9"			
5	7'-3"	1	(5)	4'-3"	1'-0"	2'-0"									
5	7'-5"	12	(5)	4'-2"	0'-9"	2'-6"						0'-0"			
5	18'-0 1/2"	2	STR									2'-4"			
5	18'-1"	19	STR												
5	6'-10"	126	(4)	2'-6"	4'-4"	0'-0"									
5	4'-4"	126	STR								0'-0"				
5	9'-6"	99	(8)	0'-0"	3'-7"	1'-0"	4'-11"								
5	4'-9"	126	(4)	2'-9"	2'-0"	0'-0"									
5	18'-7"	29	STR								0'-0"				
5	18'-11"	35	STR												
5	22'-10"	1	STR												
5	15'-2"	27	(8)	0'-0"	6'-5"	1'-0"	7'-9"								
5	23'-4"	26	STR												
5	28'-11"	26	STR												
5	26'-2"	26	STR												
5	23'-4"	13	STR												
5	28'-11"	13	STR												
5	26'-2"	13	STR												
5	13'-6"	6	STR												
5	22'-9"	2	STR												
5	18'-9 1/2"	9	STR												
5	18'-5 1/2"	20	STR												
5	17'-8"	19	STR												
5	21'-5"	1	STR												
5	24'-9"	26	STR												
5	19'-8"	26	STR												
5	20'-7"	24	STR												
5	24'-9"	13	STR												
5	19'-8"	13	STR												
5	19'-10"	13	STR												
5	12'-10"	6	STR												
5	8'-6"	4	(5)	3'-5"	0'-9"	4'-4"									
5	5'-1"	8	(5)	3'-6"	0'-9"	0'-10"						1'-7 1/2"			
5	23'-2"	1	STR									0'-9 1/4"			
5	20'-10"	2	STR												
5	9'-3"	4	(5)	4'-4"	0'-9"	4'-2"									
5	8'-0"	13	(5)	3'-0"	1'-3"	3'-9"						0'-0"			
5	7'-3"	4	(4)	3'-0"	4'-3"	0'-0"						3'-5 3/4"			
5	5'-9"	4	(5)	3'-0"	0'-9"	2'-0"					0'-0"				
5	8'-3"	4	(5)	3'-9"	0'-9"	3'-9"						1'-10 1/4"			
5	6'-9"	3	(4)	6'-3"	0'-6"	0'-0"						0'-0"			
5	12'-5"	12	(5)	4'-2"	4'-0"	4'-3"					0'-0"				
												1'-7"			

MARK	SIZE	LENGTH	NO.	TYPE	A	B	C	D	E	F	G	H	J	K	R	REMARKS
					ABUTMENT 2											
A651	6	16'-0"	126	STR												
EA652	6	8'-8"	19	(19)	4'-3"	4'-5"										
EA653	6	9'-2"	29	(19)	4'-3"	4'-11"						3'-0"				
EA654	6	9'-4"	44	(19)	4'-3"	5'-1"						3'-0"				
EA655	6	8'-11"	20	(19)	4'-3"	4'-8"						3'-0"				
EA656	6	8'-6"	14	(19)	4'-3"	4'-3"						3'-0"				
EA657	6	9'-1"	1	(5)	4'-4"	1'-7"	3'-2"									
EA658	6	12'-2"	5	(5)	7'-7"	1'-0"	3'-7"							0'-0"		
EA659	6	7'-3"	5	(4)	1'-11"	5'-4"	0'-0"							0'-0"		
EA660	6	6'-8"	3	(4)	6'-2"	0'-6"	0'-0"					0'-0"				
EA661	6	6'-8"	2	(5)	2'-10"	1'-0"	2'-10"					0'-0"				
EA662	6	4'-8"	3	STR										0'-0"		
A663	6	20'-7"	2	STR												
A664	6	22'-10"	1	STR												
A665	6	25'-3"	1	STR												
EA666	6	6'-2"	2	STR												
EA667	6	13'-4"	2	(5)	6'-2"	1'-0"	6'-2"									
EA668	6	13'-9"	1	(5)	6'-2"	1'-5"	6'-2"							0'-0"		
EA669	6	13'-7"	1	(5)	6'-2"	1'-3"	6'-2"							0'-0"		
														0'-0"		
A751	7	13'-6"	127	STR												
F551	5	4'-6"	241	STR												
F651	6	5'-10"	32	(2)	0'-8"	5'-2"					0'-0"	0'-6"				
F751	7	13'-6"	67	STR												
F752	7	14'-6"	218	STR												
F753	7	42'-0"	32	STR												
F754	7	33'-1" TO 42'-0"	32	STR												
F755	7	1'-3" TO 13'-6"	16	STR												2, EACH VARY BY 7 1/4"
F756	7	38'-2" TO 48'-8"	32	STR												EACH VARY BY 9 7/8"
F757	7	16'-11"	1	STR												2, EACH VARY BY 8 1/2"
F758	7	1'-10" TO 13'-2"	9	STR												
F759	7	14'-7" TO 15'-6"	6	STR												EACH VARY BY 1'-3"
F760	7	1'-0" TO 15'-6"	36	STR												EACH VARY BY 2 1/4"
F761	7	24'-0"	1	STR												EACH VARY BY 4 7/8"
F762	7	27'-0" TO 48'-8"	24	STR												
F763	7	2'-2" TO 13'-6"	22	STR												2, EACH VARY BY 1'-11 5/8"
F764	7	8'-6"	1	(4)	4'-6"	4'-0"	0'-0"									EACH VARY BY 6 1/2"
F765	7	10'-1"	2	(5)	4'-0"	2'-1"	4'-0"					0'-0"				
F766	7	48'-8"	6	STR									3'-8 1/2"			
F767	7	24'-10"	32	STR												
F768	7	24'-6" TO 42'-0"	32	STR												
F769	7	8'-0"	32	(19)	4'-0"	4'-0"						3'-8 1/2"				2, EACH VARY BY 1'-2"
F851	8	8'-2"	419	(2)	0'-11"	7'-3"					0'-0"	0'-8"				
F951	9	13'-6"	134	STR												
F952	9	1'-2" TO 13'-2"	19	STR												
F953	9	2'-2" TO 13'-6"	44	STR												EACH VARY BY 8"
F954	9	8'-6"	1	(4)	4'-6"	4'-0"	0'-0"					0'-0"				EACH VARY BY 3 1/4"
F1051	10	14'-6"	218	STR												
F1052	10	1'-3" TO 13'-6"	16	STR												
F1053	10	16'-11"	1	STR												EACH VARY BY 9 7/8"
F1054	10	14'-7" TO 15'-6"	6	STR												
F1055	10	1'-0" TO 15'-6"	36	STR												EACH VARY BY 2 1/4"
F1056	10	24'-0"	1	STR												EACH VARY BY 4 7/8"

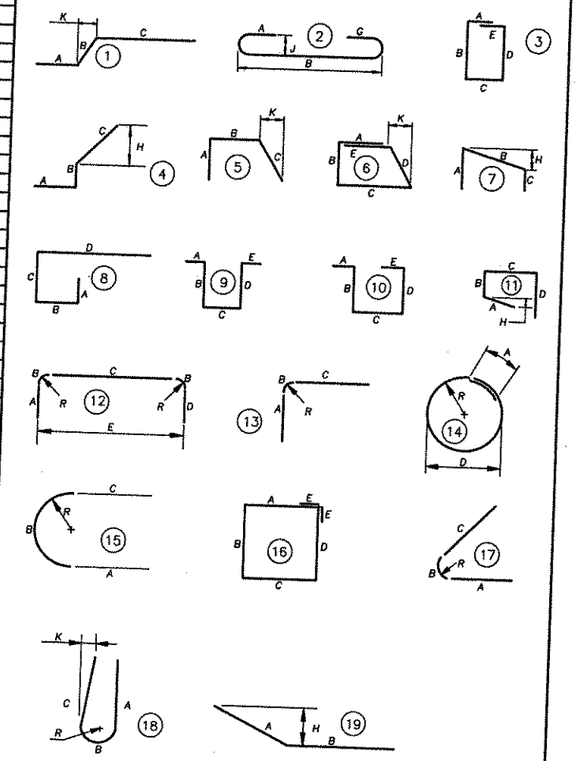

- *All dimensions are out to out of bar except "A" and "G" on standard 135° and 180° hooks, and "R" which is shown to the inside of the bar.*
- *Figures in circles show types.*
- *Prefix "E" indicates epoxy coated reinforcement.*

REINFORCEMENT BAR SCHEDULE

SIZE	LENGTH	NO.	TYPE	A	B	C	D	E	F	G	H	J	K	R	REMARKS
						WING C AND WING D									
5	23'-8"	7	STR												
5	24'-5"	6	STR												
5	24'-5"	1	(19)	1'-5"	23'-0"						0'-6"				
5	22'-8"	7	STR												
5	22'-5"	6	STR												
5	22'-6"	1	(19)	1'-5"	21'-1"						0'-6"				
5	9'-6"	12	STR												
5	9'-6"	2	(19)	1'-5"	8'-1"						0'-6"				
6	5'-7"	116	(18)	2'-5"	0'-9"	2'-5"							0'-3"	0'-3"	
6	5'-1"	4	(18)	2'-2"	0'-9"	2'-2"							0'-2 3/4"	0'-3"	
6	3'-6"	4	(19)	1'-5"	2'-1"						0'-6"				
5	25'-6"	24	STR												
5	3'-8"	120	(19)	1'-2"	2'-6"						0'-7"				
5	26'-0"	19	STR												
5	23'-8"	34	STR												
5	18'-5"	26	STR												
5	18'-11"	2	STR												
5	21'-5"	2	STR												
5	24'-5"	4	STR												
5	25'-1"	23	STR												
5	25'-4 1/2"	18	STR												
5	22'-8"	34	STR												
5	16'-5"	26	STR												
5	17'-6"	2	STR												
5	20'-7"	2	STR												
5	22'-5"	4	STR												
5	7'-0"	4	STR												
5	6'-5"	4	STR												
5	4'-5"	4	STR												
5	5'-3"	52	(2)	0'-7"	4'-8"					0'-0"		0'-5"			
5	3'-6"	52	STR												
5	4'-3"	12	(2)	0'-7"	3'-8"					0'-0"		0'-5"			
6	19'-6"	43	STR												
6	6'-9"	24	STR												
6	7'-0"	19	STR												
6	7'-0" TO 11'-4"	12	(8)	1'-11" TO 4'-1"	1'-0"	4'-1" TO 6'-3"	0'-0"								1, VARY A AND C BY 5 1/4"
6	11'-9"	4	(19)	7'-9"	4'-0"						6'-11 1/4"				
6	19'-0"	41	STR												
6	7'-2"	23	STR												
6	7'-6"	18	STR												
6	24'-2"	14	STR												
6	7'-6" TO 11'-10"	10	(8)	4'-4" TO 6'-6"	1'-0"	2'-2" TO 4'-4"	0'-0"								2, VARY A AND C BY 6 1/2"
6	11'-0"	4	(19)	7'-0"	4'-0"						5'-7 1/4"				
6	26'-7 1/2"	14	STR												
7	14'-6"	83	STR												

MARK	SIZE	LENGTH	NO.	TYPE	A	B	C	D	E	F	G	H	J	K	R	REMARKS

DWG. NO.	CONTRACT	COUNTY	FEDERAL AID PROJECT No.	SHEET No.	TOTAL SHEETS
55	83-101-02	NEW CASTLE	F-1045 (26)	340	492

ROUTE 7 OVER
EAGLE RUN
3 SPAN CONT. COMP. P/S CONC. BOX BM. BRIDGE

WINGWALL BAR LIST

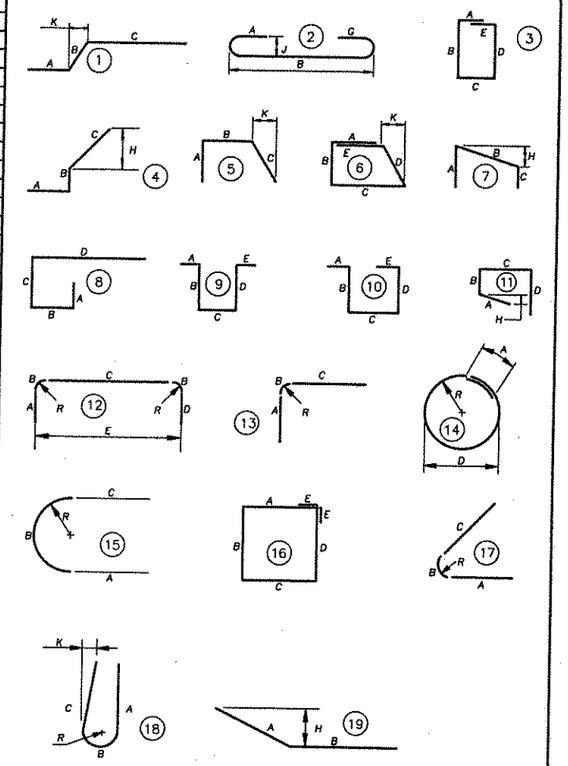

- *All dimensions are out to out of bar except "A" and "G" on standard 135° and 180° hooks, and "R" which is shown to the inside of the bar.*
- *Figures in circles show types.*
- *Prefix "E" indicates epoxy coated reinforcement.*

DWG. NO.	CONTRACT	COUNTY	FEDERAL AID PROJECT No.	SHEET No.	TOTAL SHEETS
56	83-101-02	NEW CASTLE	F-1045 (26)	341	492

ROUTE 7 OVER EAGLE RUN
3 SPAN CONT. COMP. P/S CONC. BOX BM. BRIDGE
BENT 1 S.B.

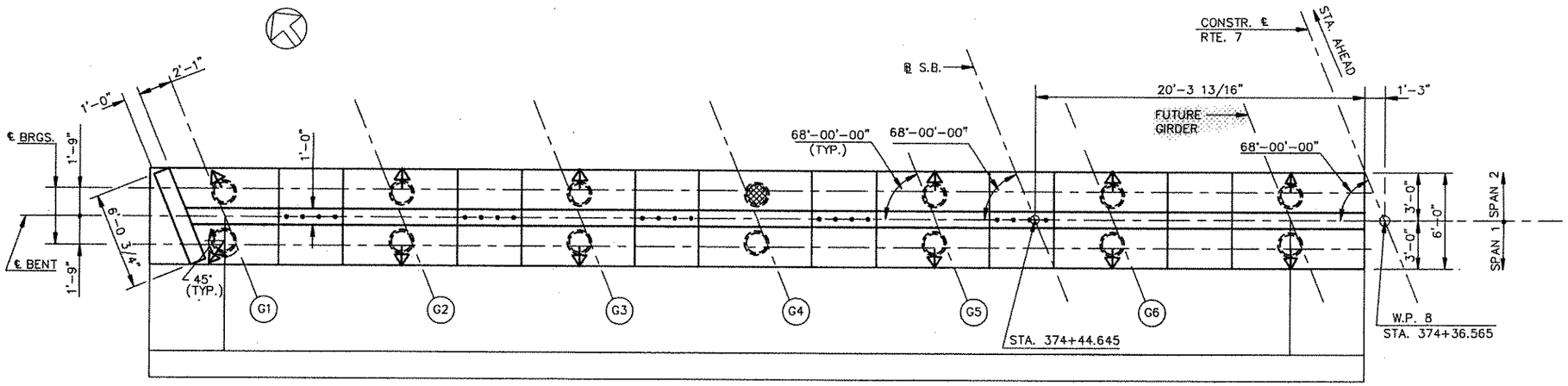

PLAN
SCALE: 1/4" = 1'-0"

NOTES:

- FOR ADDITIONAL DETAILS SEE DWG. NO. 60
- FOR BAR LIST SEE DWG. NO. 61
- FOR PILE DETAILS SEE SHEET NO. 235
- FOR ELEVATIONS A THROUGH F SEE TABLE ON DWG. NO. 60
- ● DENOTES TEST PILE
- ↓ DENOTES PILE BATTER 1 TO 6 IN DIRECTION OF ARROW
- FOR MIN. PILE TIP ELEVATIONS SEE GENERAL PLAN, DWG. NO. 33

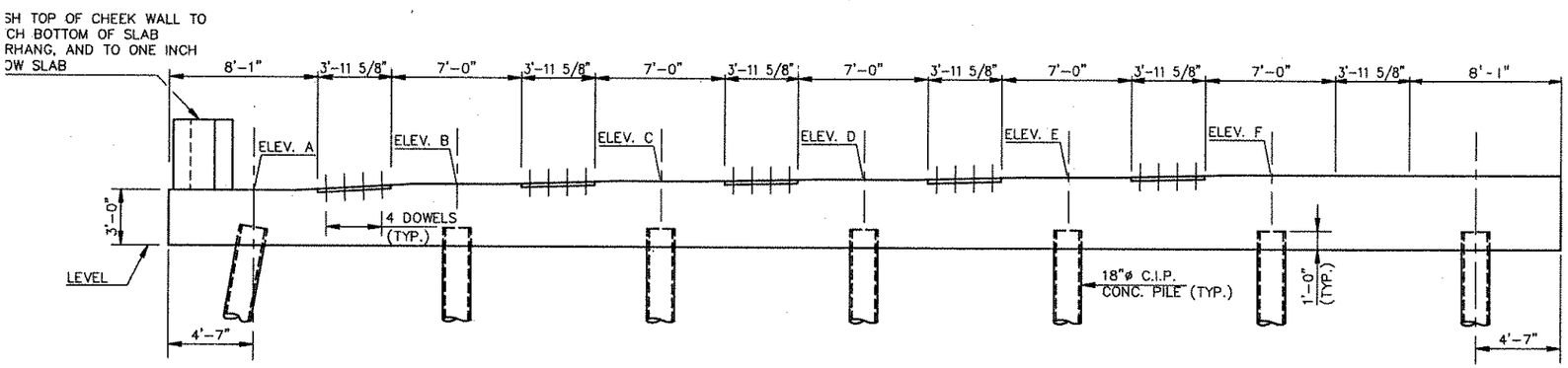

ELEVATION
SCALE: 1/4" = 1'-0"

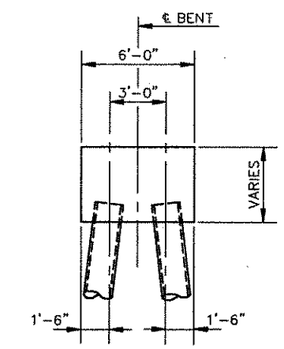

SIDE ELEVATION
SCALE: 1/4" = 1'-0"

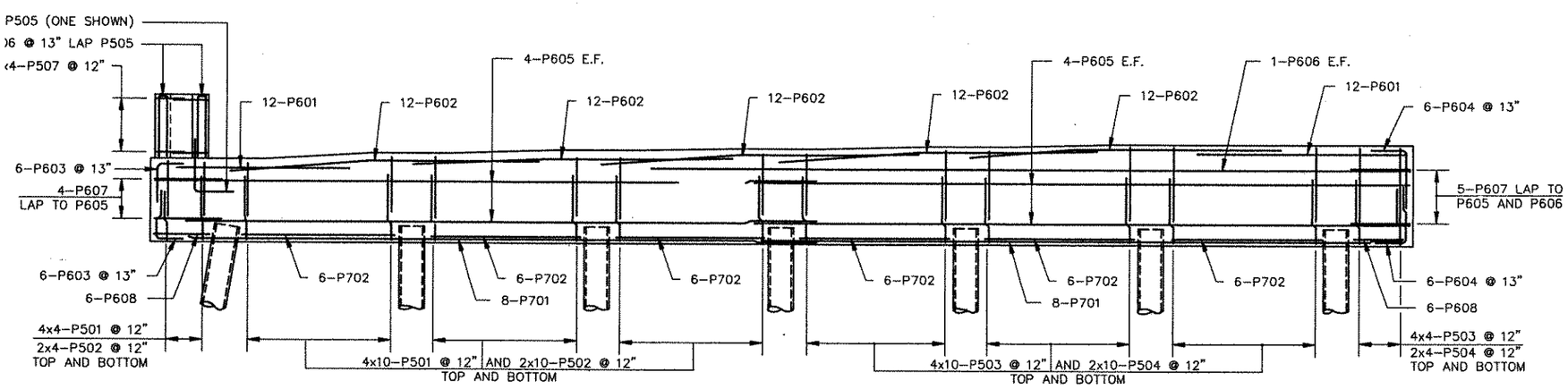

ELEVATION REINFORCEMENT
HORIZ. SCALE: 1/4" = 1'-0"

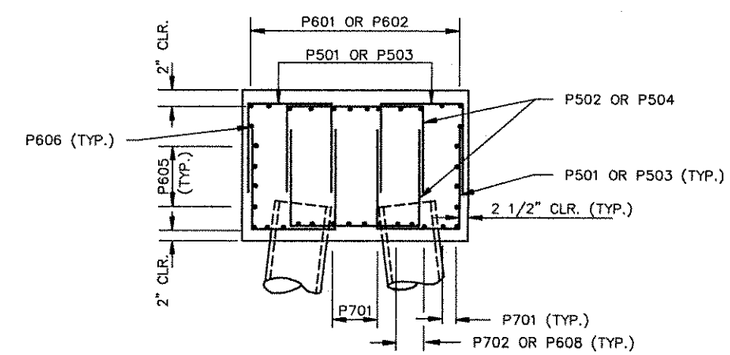

TYPICAL SECTION
SCALE: 1/2" = 1'-0"

DWG. NO.	CONTRACT	COUNTY	FEDERAL AID PROJECT No.	SHEET No.	TOTAL SHEETS
57	83-101-02	NEW CASTLE	F-1045 (26)	342	492

ROUTE 7 OVER
EAGLE RUN
3 SPAN CONT. COMP. P/S CONC. BOX BM. BRIDGE
BENT 2 S.B.

NOTE:

- FOR NOTES SEE DWG. NO. 56

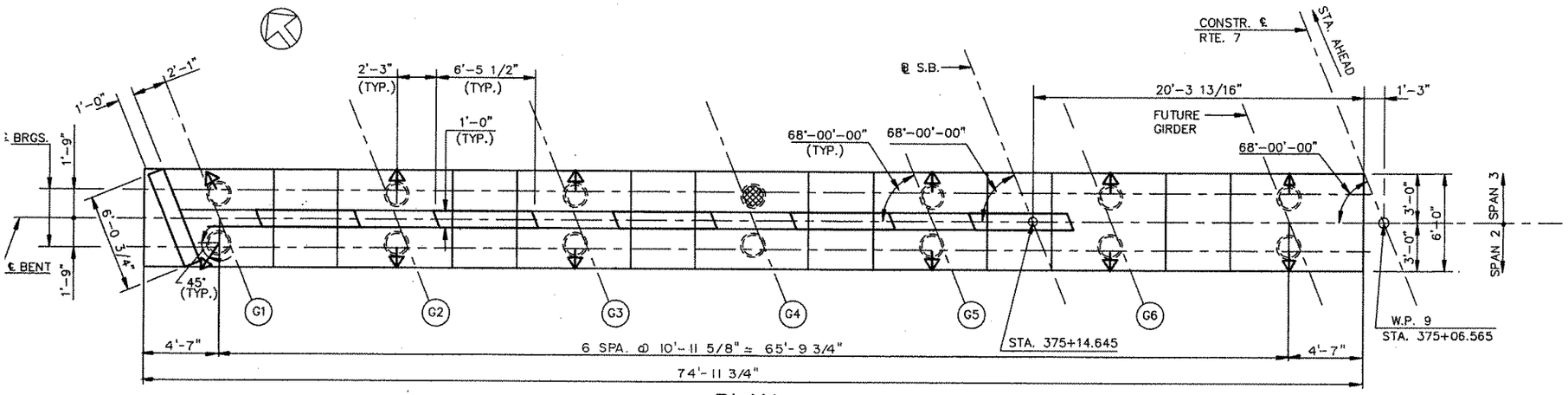

PLAN

SCALE: 1/4" = 1'-0"

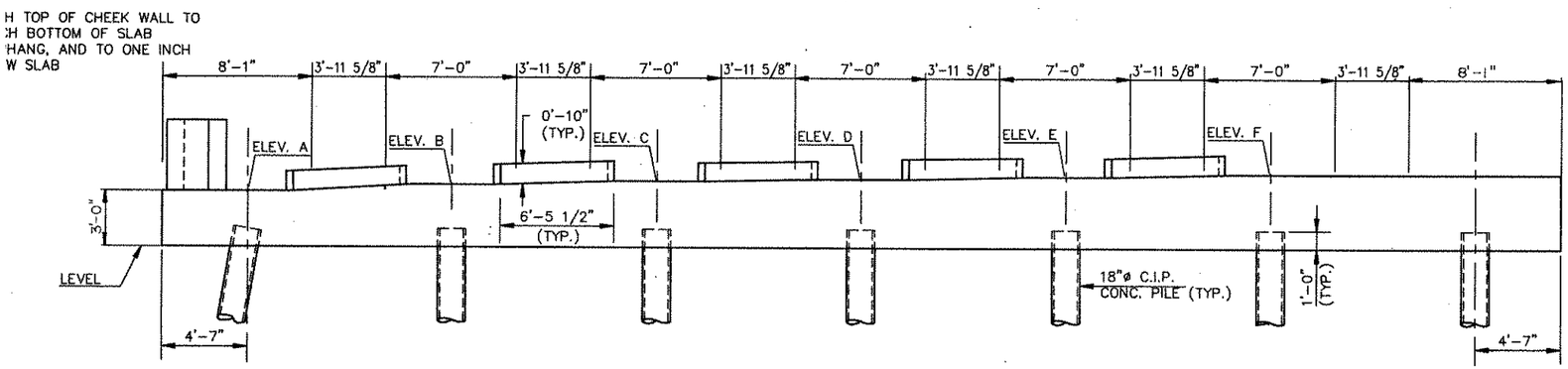

ELEVATION

SCALE: 1/4" = 1'-0"

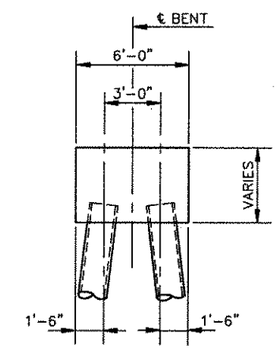

SIDE ELEVATION

SCALE: 1/4" = 1'-0"

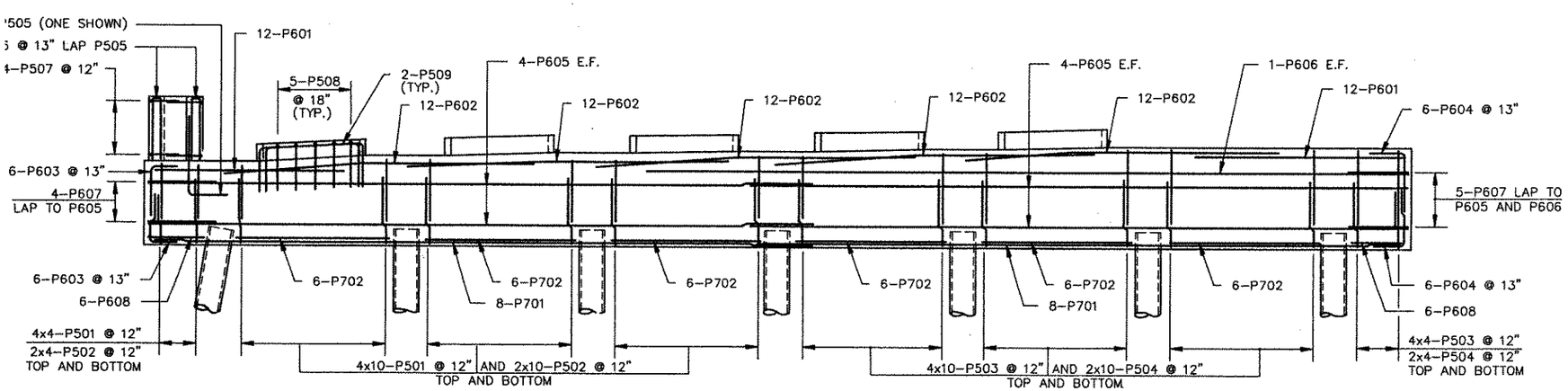

ELEVATION REINFORCEMENT

HORIZ. SCALE: 1/4" = 1'-0"

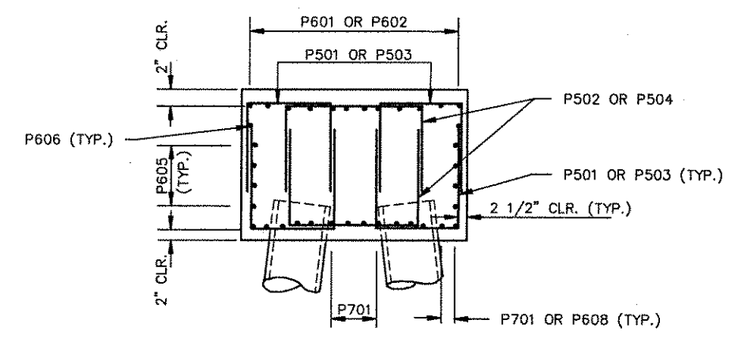

TYPICAL SECTION

SCALE: 1/2" = 1'-0"

DWG. NO.	CONTRACT	COUNTY	FEDERAL AID PROJECT No.	SHEET No	TOTAL SHEETS
58	83-101-02	NEW CASTLE	F-1045 (26)	343	492

ROUTE 7 OVER
EAGLE RUN
3 SPAN CONT. COMP. P/S CONC. BOX BM. BRIDGE
BENT 1 N.B.

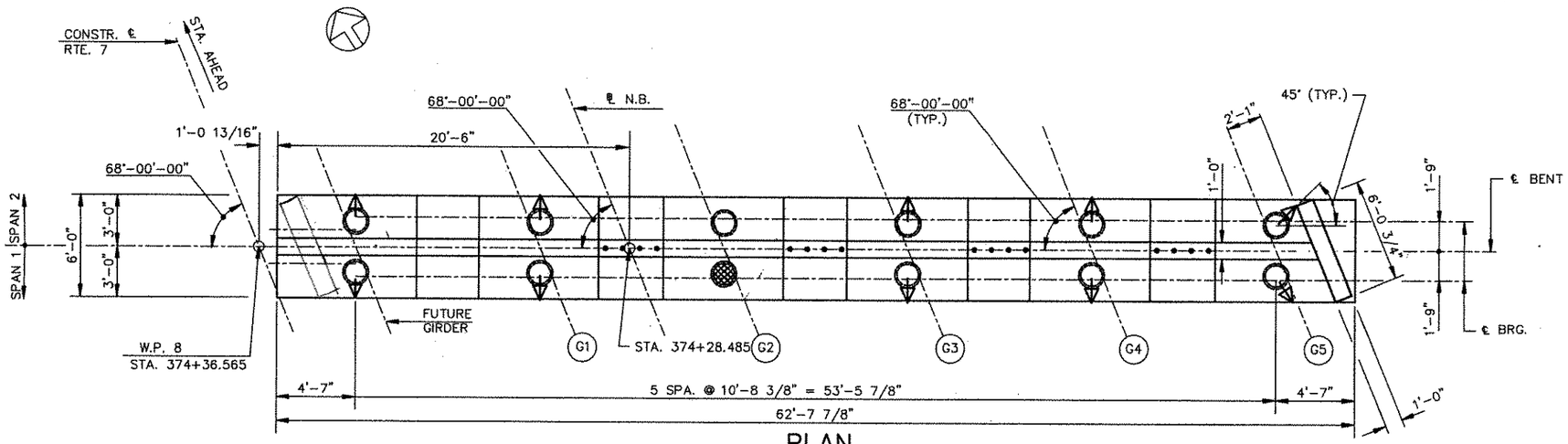

PLAN
SCALE: 1/4" = 1'-0"

NOTES:

- FOR ADDITIONAL DETAILS SEE DWG. NO. 60
- FOR BAR LIST SEE DWG. NO. 61
- FOR PILE DETAILS SEE SHEET NO. 235
- FOR ELEVATIONS A THROUGH E SEE TABLE ON DWG. NO. 60
- ● DENOTES TEST PILE
- ✦ DENOTES PILE BATTER 1 TO 6 IN DIRECTION OF ARROW
- FOR MIN. PILE TIP ELEVATIONS SEE GENERAL PLAN, DWG. NO. 33

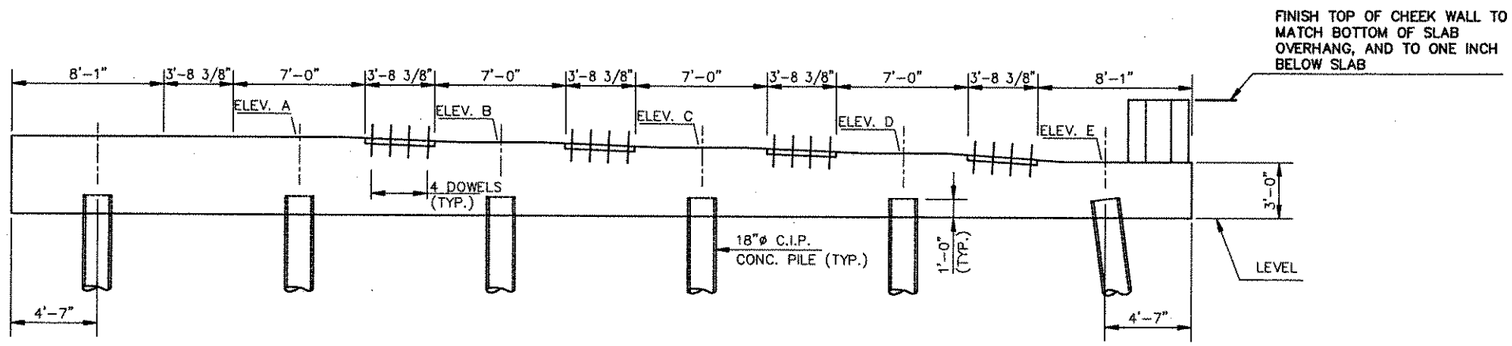

ELEVATION
SCALE: 1/4" = 1'-0"

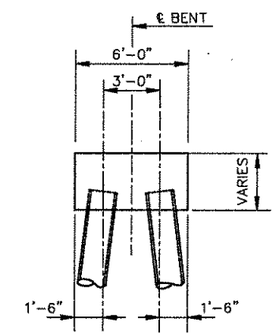

SIDE ELEVATION
SCALE: 1/4" = 1'-0"

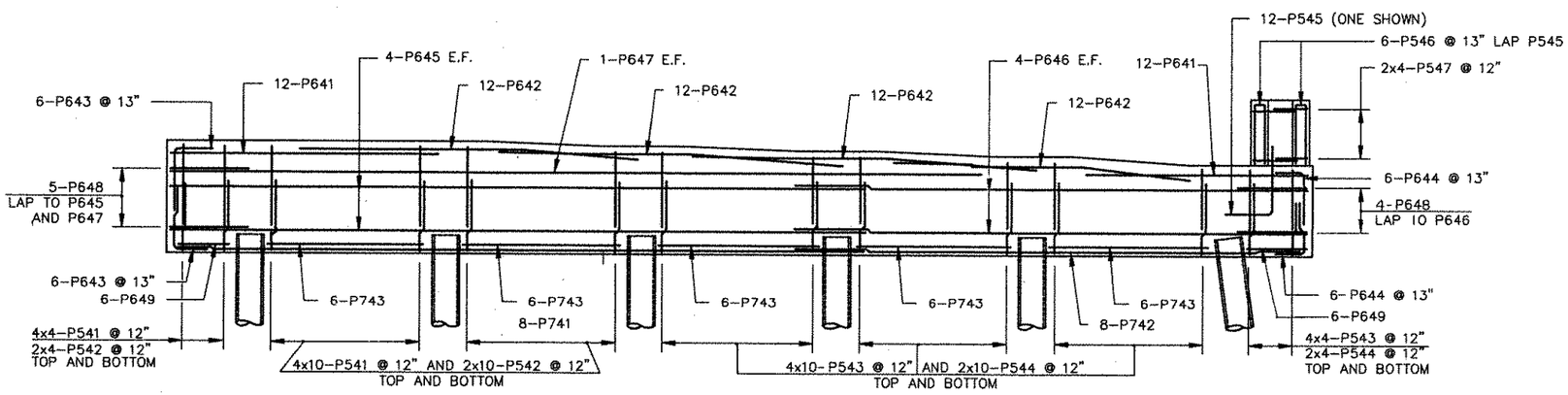

ELEVATION REINFORCEMENT
HORIZ. SCALE: 1/4" = 1'-0"

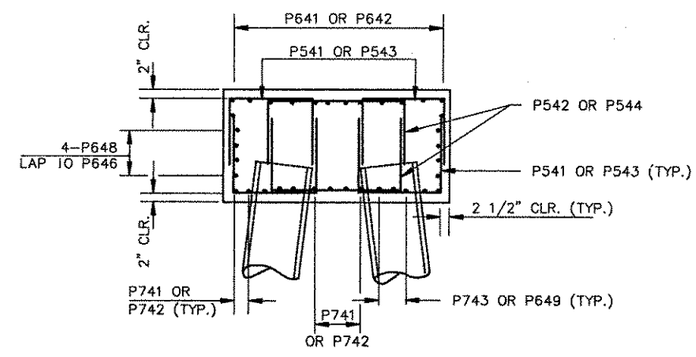

TYPICAL SECTION
SCALE: 1/2" = 1'-0"

DWG. NO.	CONTRACT	COUNTY	FEDERAL AID PROJECT No.	SHEET No.	TOTAL SHEETS
59	83-101-02	NEW CASTLE	F-1045 (26)	344	492

ROUTE 7 OVER EAGLE RUN
3 SPAN CONT. COMP. P/S CONC. BOX BM. BRIDGE
BENT 2 N.B.

NOTE:

- FOR NOTES SEE DWG. NO. 58

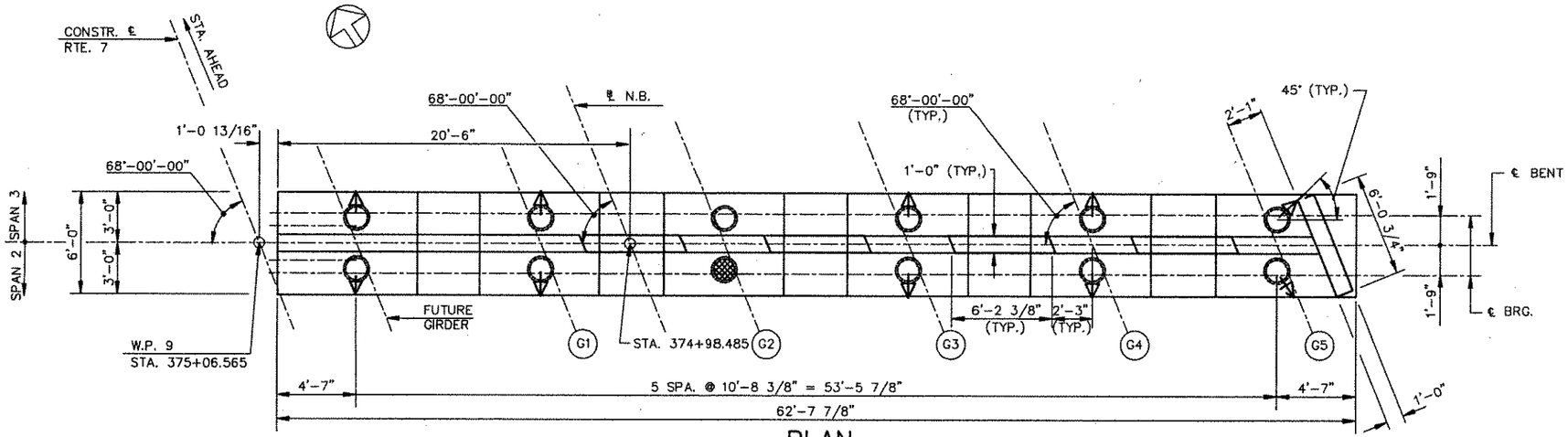

PLAN
SCALE: 1/4" = 1'-0"

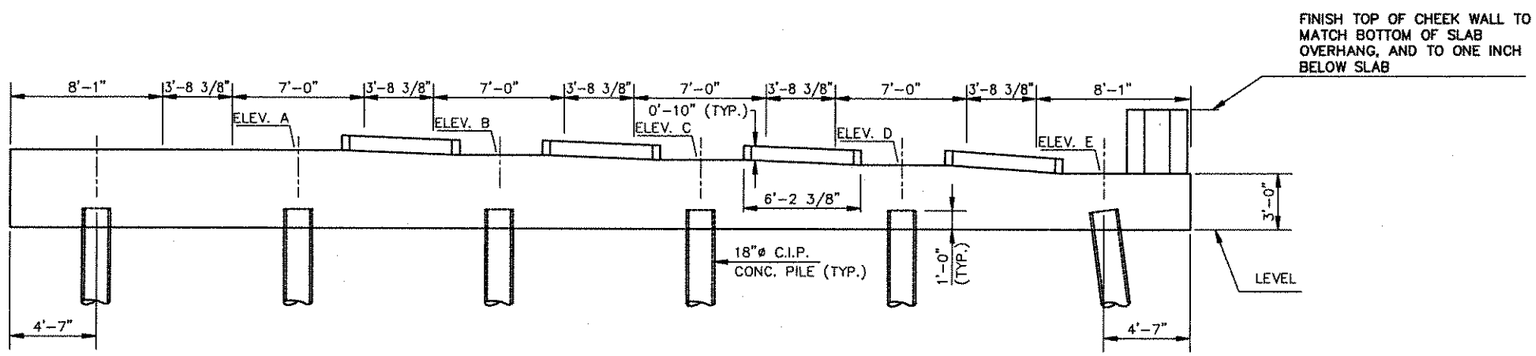

ELEVATION
SCALE: 1/4" = 1'-0"

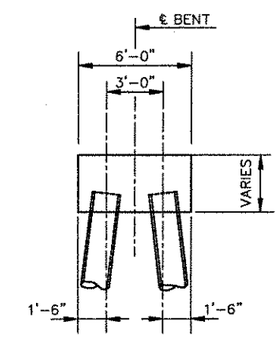

SIDE ELEVATION
SCALE: 1/4" = 1'-0"

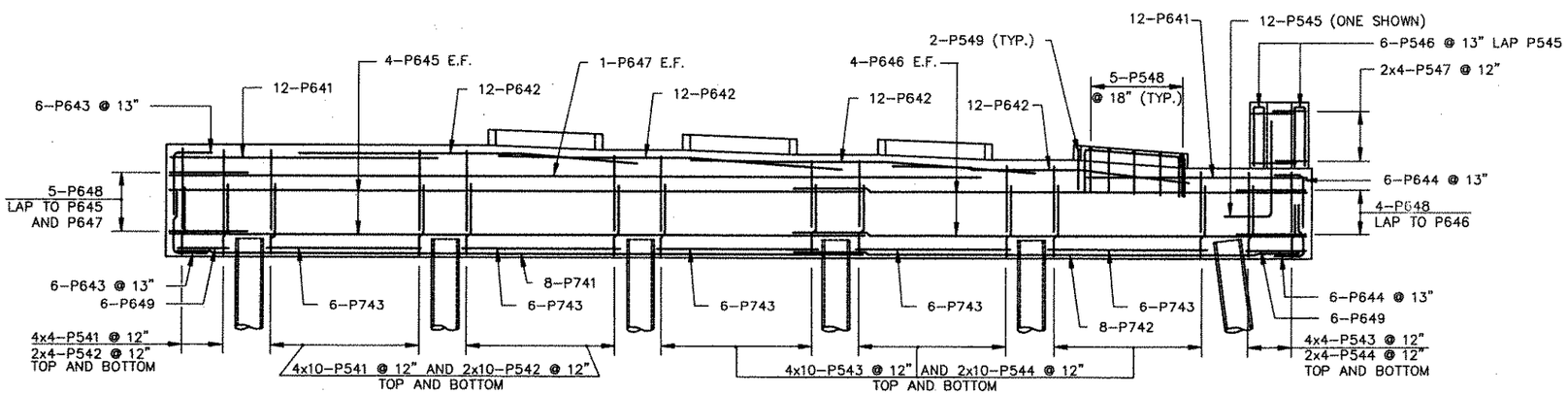

ELEVATION REINFORCEMENT
HORIZ. SCALE: 1/4" = 1'-0"

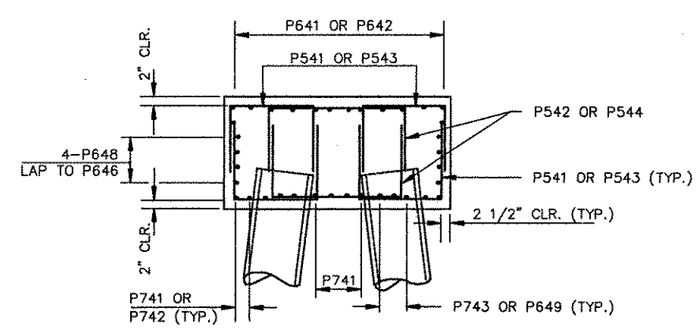

TYPICAL SECTION
SCALE: 1/2" = 1'-0"

DWG. NO.	CONTRACT	COUNTY	FEDERAL AID PROJECT No.	SHEET No.	TOTAL SHEETS
60	83-101-02	NEW CASTLE	F-1045 (26)	345	492

ROUTE 7 OVER EAGLE RUN
3 SPAN CONT. COMP. P/S CONC. BOX BM. BRIDGE
BENT DETAILS

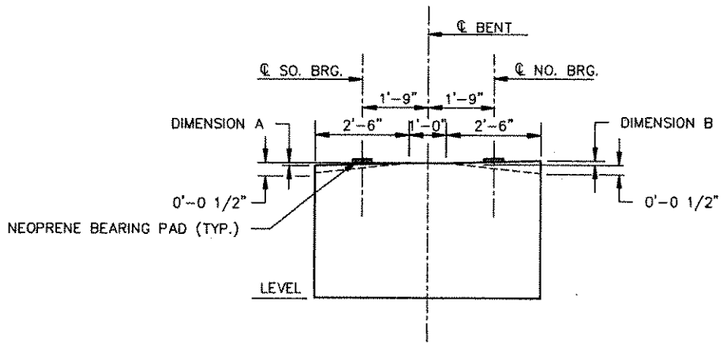

TYPICAL SECTION
N.T.S.

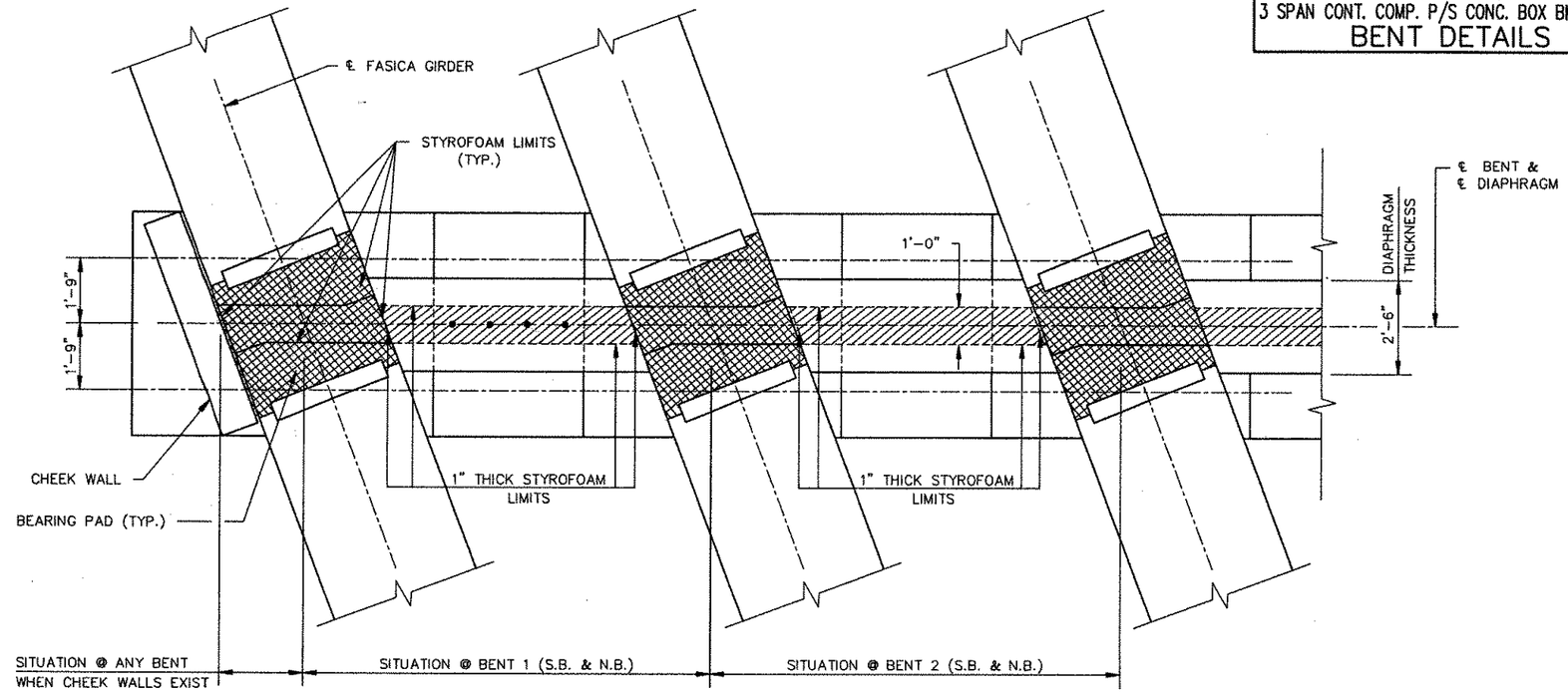

PLAN
N.T.S.

DIMENSIONS A & B					
LOCATION		BENT 1		BENT 2	
		A	B	A	B
SOUTH BOUND	G1	1/8"	3/8"	3/8"	3/8"
	G2	1/8"	3/8"	3/8"	3/8"
	G3	1/8"	3/8"	3/8"	3/8"
	G4	1/8"	3/8"	3/8"	3/8"
	G5	1/4"	3/8"	3/8"	3/8"
	G6	1/4"	3/8"	3/8"	3/8"
NORTH BOUND	G1	1/4"	1/4"	1/4"	3/8"
	G2	1/4"	1/4"	1/4"	3/8"
	G3	1/4"	1/4"	1/4"	3/8"
	G4	1/4"	1/4"	1/4"	3/8"
	G5	1/4"	1/4"	1/4"	3/8"

ELEVATIONS @ ℄ BENTS			
	ELEVATION	BENT 1	BENT 2
SOUTH BOUND	A	21.79	22.47
	B	22.16	22.84
	C	22.32	23.00
	D	22.48	23.17
	E	22.64	23.32
	F	22.80	23.47
NORTH BOUND	A	22.70	23.35
	B	22.46	23.11
	C	22.23	22.87
	D	21.97	22.60
	E	21.54	22.17

BEARING PAD NOTES:

- ALL NEOPRENE BEARING PADS HAVE A SURFACE AREA OF 8"x40" (50 DUROMETER).
- BEARING PADS LOCATED ON BENT 1 ARE 1 1/4" THICK.
- BEARING PADS LOCATED ON BENT 2 ARE 1 7/8" THICK.
- ALL BEARING PADS ARE NORMAL TO ℄ GIRDERS.

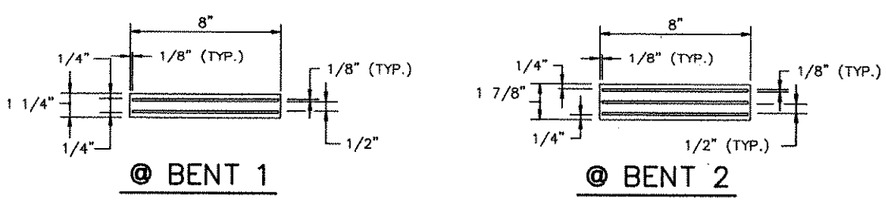

BEARING PAD SECTION
SCALE: 3" = 1'-0"

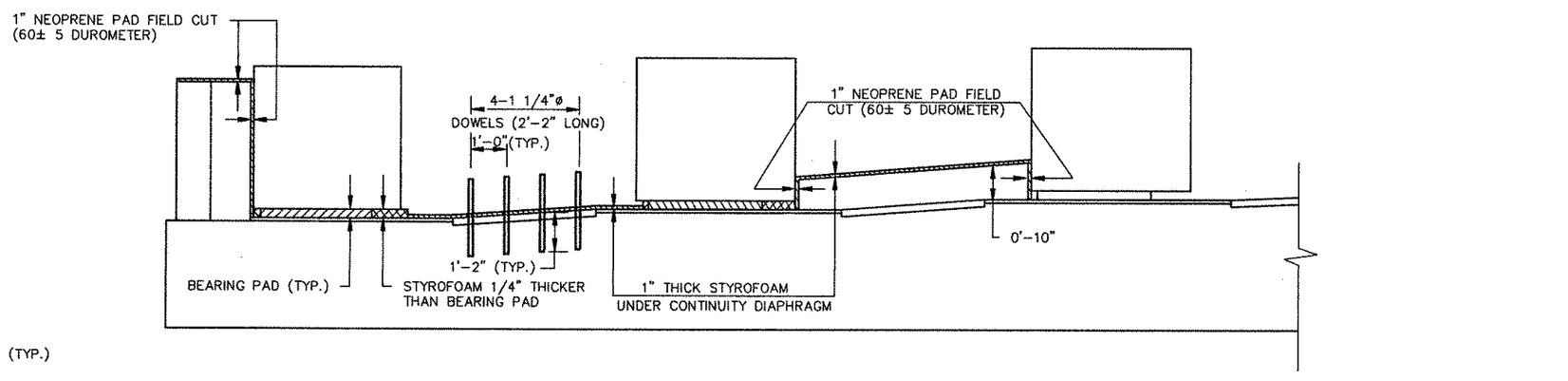

ELEVATION
N.T.S.

NOTE:

- WORK THIS DWG. WITH DWG. NO. 56, 57, 58 OR 59

REINFORCEMENT BAR SCHEDULE

DWG. NO.	CONTRACT	COUNTY	FEDERAL AID PROJECT No.	SHEET No.	TOTAL SHEETS
61	83-101-02	NEW CASTLE	F-1045 (26)	346	492

ROUTE 7 OVER
EAGLE RUN
3 SPAN CONT. COMP. P/S CONC. BOX BM. BRIDGE

BENT BAR LIST

BENT 1 S.B. AND BENT 2 S.B.

MARK	SIZE	LENGTH	NO.	TYPE	A	B	C	D	E	F	G	H	J	K	R	REMARKS
	5	7'-7"	272	(5)	2'-7"	2'-5"	2'-7"							0'-0"		
	5	8'-7"	136	(5)	2'-7"	3'-5"	2'-7"							0'-0"		
	5	8'-5"	272	(5)	3'-0"	2'-5"	3'-0"							0'-0"		
	5	9'-5"	136	(5)	3'-0"	3'-5"	3'-0"							0'-0"		
	5	5'-10"	24	(4)	2'-2"	3'-8"	0'-0"					0'-0"				
	5	7'-9"	12	(5)	3'-7"	0'-7"	3'-7"							0'-0"		
	5	8'-8"	16	(5)	4'-0"	0'-8"	4'-0"							0'-0"		
	5	4'-10"	25	(5)	2'-1"	0'-8"	2'-1"							0'-0"		
	5	10'-5"	10	(7)	2'-1"	6'-2"	2'-1"					0'-2"				
	6	11'-4"	48	STR												
	6	18'-0"	120	(19)	7'-0"	11'-0"						0'-3 3/8"				
	6	5'-3"	24	(4)	2'-9"	2'-6"	0'-0"					0'-0"				
	6	5'-9"	24	(4)	2'-9"	3'-0"	0'-0"					0'-0"				
	6	38'-9"	32	STR												
	6	45'-0"	4	STR												
	6	11'-0"	18	(5)	2'-9"	5'-6"	2'-9"							0'-0"		
	6	3'-5"	24	STR												
	7	39'-6"	32	STR												
	7	9'-1"	72	STR												
	1 1/4"ϕ	2'-2"	20	STR												

BENT 1 N.B. AND BENT 2 N.B.

MARK	SIZE	LENGTH	NO.	TYPE	A	B	C	D	E	F	G	H	J	K	R	REMARKS
P541	5	8'-7"	192	(5)	3'-1"	2'-5"	3'-1"							0'-0"		
P542	5	9'-7"	96	(5)	3'-1"	3'-5"	3'-1"							0'-0"		
P543	5	7'-7"	272	(5)	2'-7"	2'-5"	2'-7"							0'-0"		
P544	5	8'-7"	136	(5)	2'-7"	3'-5"	2'-7"							0'-0"		
P545	5	5'-10"	24	(4)	2'-2"	3'-8"	0'-0"					0'-0"				
P546	5	7'-9"	12	(5)	3'-7"	0'-7"	3'-7"							0'-0"		
P547	5	8'-8"	16	(5)	4'-0"	0'-8"	4'-0"							0'-0"		
P548	5	4'-10"	20	(5)	2'-1"	0'-8"	2'-1"							0'-0"		
P549	5	10'-1"	8	(7)	2'-1"	5'-11"	2'-1"					0'-2"				
P641	6	14'-6"	48	STR												
P642	6	18'-0"	96	(19)	7'-0"	11'-0"						0'-3 3/8"				
P643	6	5'-11"	24	(4)	2'-9"	3'-2"	0'-0"					0'-0"				
P644	6	5'-3"	24	(4)	2'-9"	2'-6"	0'-0"					0'-0"				
P645	6	38'-0"	16	STR												
P646	6	27'-4"	16	STR												
P647	6	44'-6"	4	STR												
P648	6	11'-0"	18	(5)	2'-9"	5'-6"	2'-9"							0'-0"		
P649	6	3'-5"	24	STR												
P741	7	38'-7"	16	STR												
P742	7	27'-11"	16	STR												
P743	7	8'-10"	60	STR												
DOWELS	1 1/4"ϕ	2'-2"	16	STR												

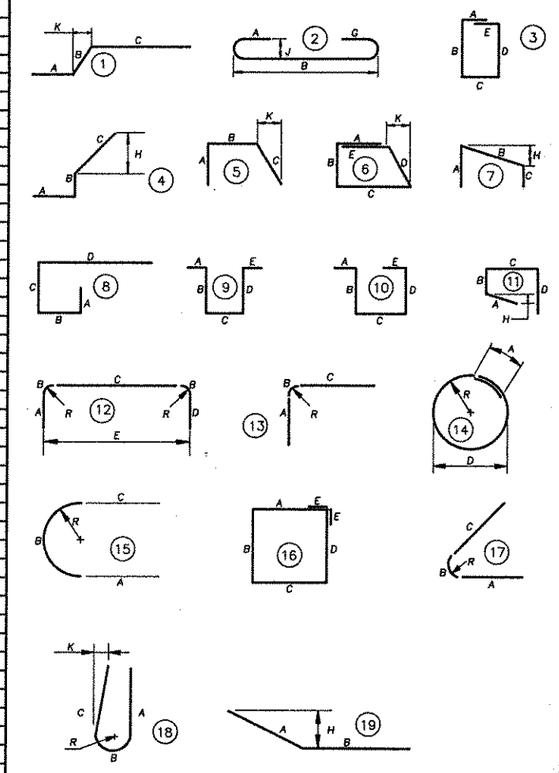

- *All dimensions are out to out of bar except "A" and "G" on standard 135° and 180° hooks, and "R" which is shown to the inside of the bar.*
- *Figures in circles show types.*

DWG. NO.	CONTRACT	COUNTY	FEDERAL AID PROJECT No.	SHEET No.	TOTAL SHEETS
62	83-101-02	NEW CASTLE	F-1045 (26)	347	492

ROUTE 7 OVER
EAGLE RUN
3 SPAN CONT. COMP. P/S CONC. BOX BM. BRIDGE
FRAMING PLAN S.B.

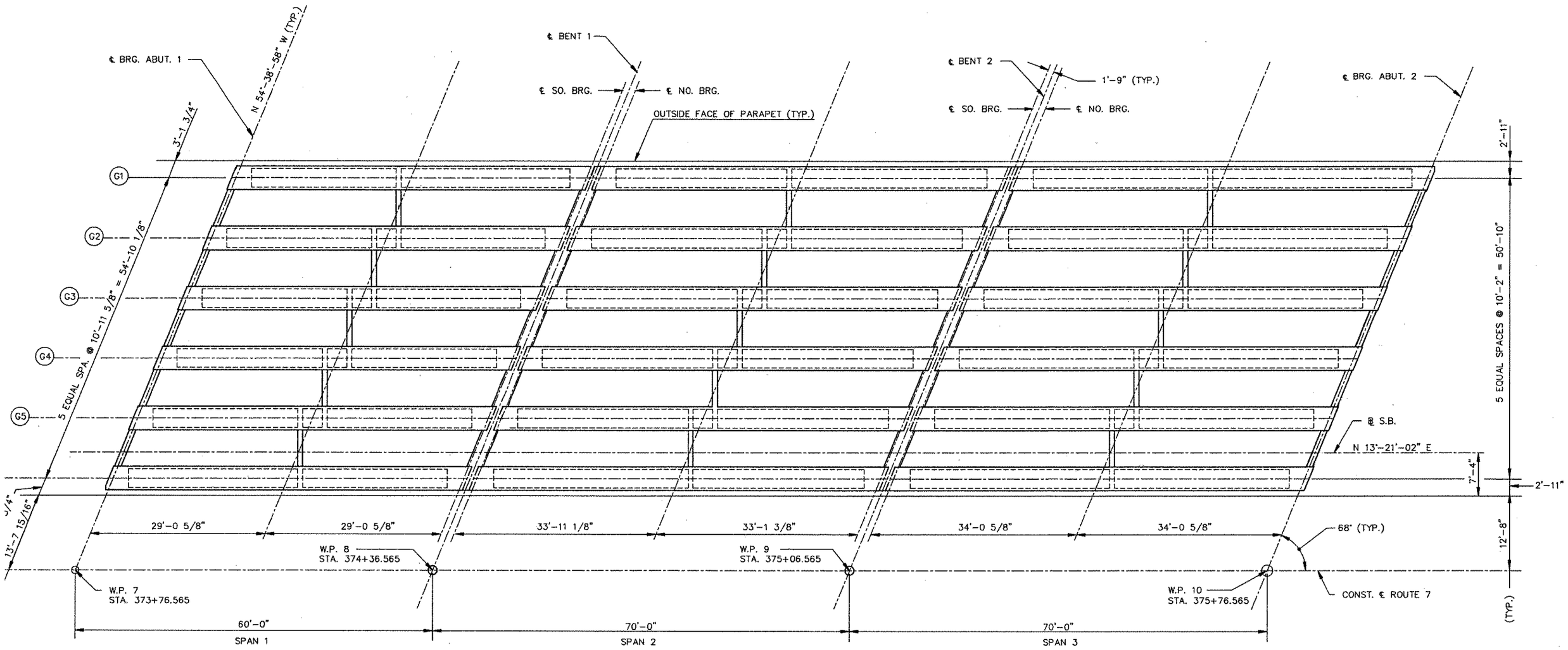

FRAMING PLAN S.B.

SCALE: 1/8"=1'-0"

NOTE:

- FOR NOTES SEE DWG. NO. 63

DWG. NO.	CONTRACT	COUNTY	FEDERAL AID PROJECT No.	SHEET No.	TOTAL SHEETS
63	83-101-02	NEW CASTLE	F-1045 (26)	348	492

ROUTE 7 OVER
EAGLE RUN
3 SPAN CONT. COMP. P/S CONC. BOX BM. BRIDGE
FRAMING PLAN N.B.

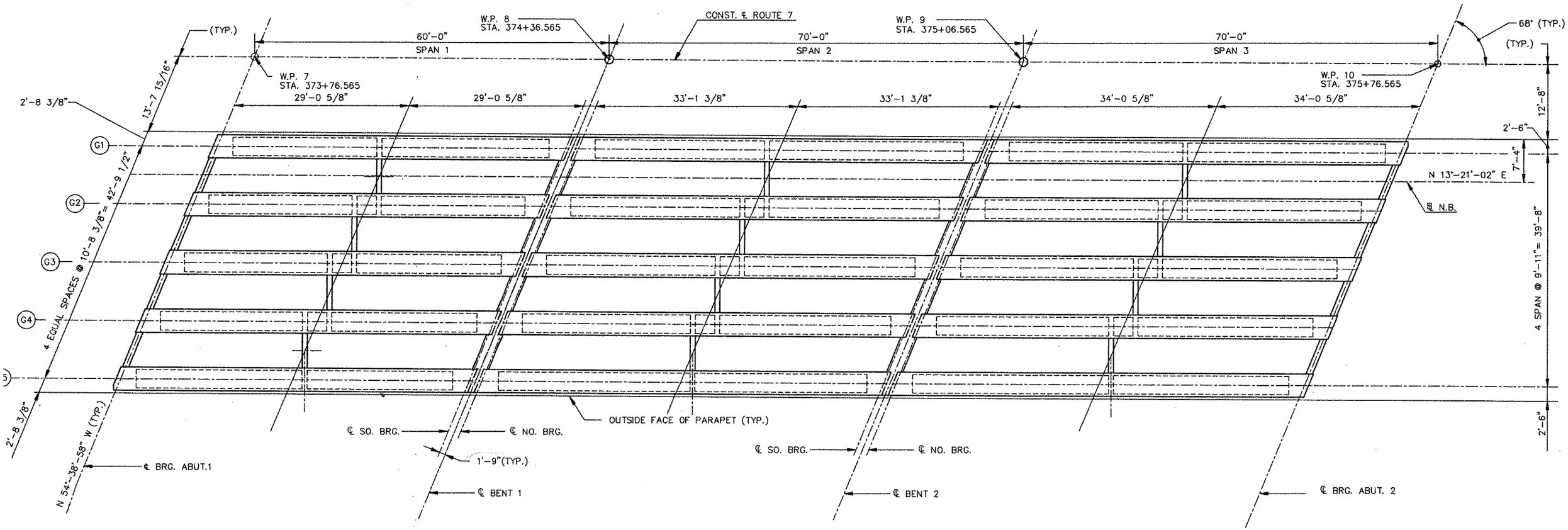

FRAMING PLAN N.B.

SCALE: 1/8"=1'-0"

NOTES:

- FOR STAKE-OUT PLANS SEE DWG. NO. 37
- FOR BENT PLANS SEE DWG. NO. 56, 57, 58 & 59
- FOR GIRDER DETAILS AND NOTES SEE DWG. NOS. 64 & 65
- FOR ABUTMENT PLANS SEE DWG. NOS. 38, 39, 43 & 44
- FOR CONTINUITY DIAPHRAGMS SEE DWG. NO. 71 & 73
- FOR INTERMEDIATE AND END DIAPHRAGMS SEE DWG. NO. 70 & 72

DWG. NO.	CONTRACT	COUNTY	FEDERAL AID PROJECT No.	SHEET No.	TOTAL SHEETS
64	83-101-02	NEW CASTLE	F-1045 (26)	349	492

ROUTE 7 OVER
EAGLE RUN
3 SPAN CONT. COMP. P/S CONC. BOX BM. BRIDGE
GIRDER DETAILS 1

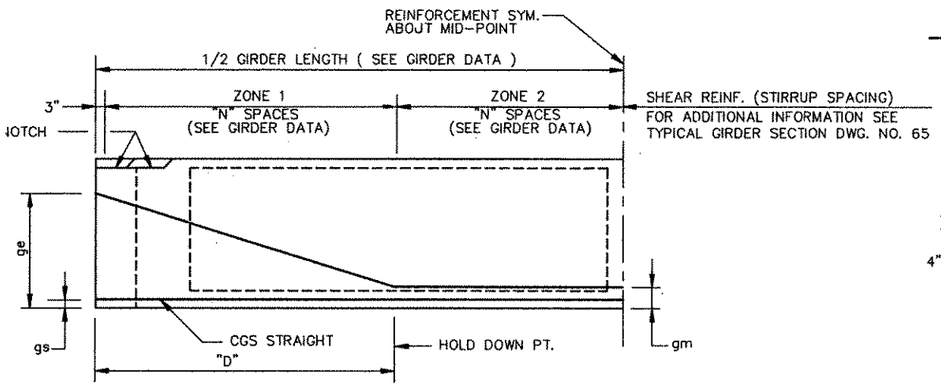

TYPICAL GIRDER HALF ELEVATION

N.T.S.

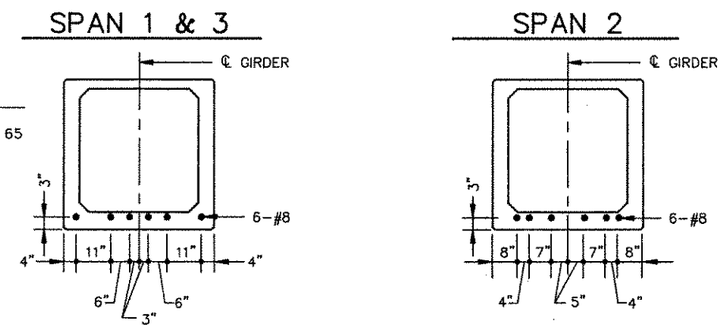

POSITIVE MOMENT REINF. LOCATIONS

SCALE: 1/2"=1'-0"

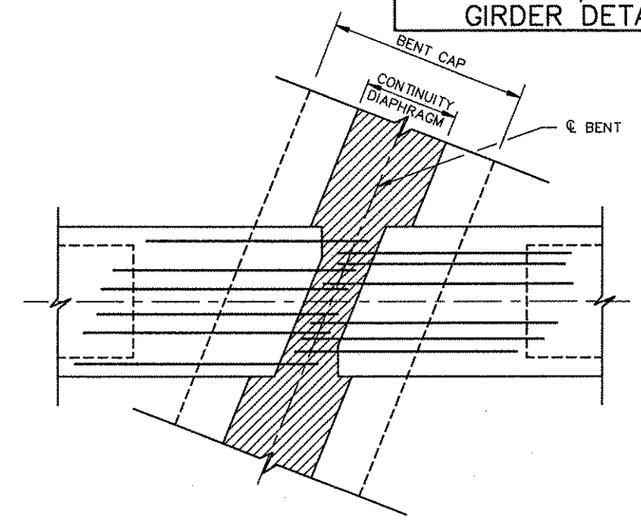

GIRDER END PLAN VIEW @ BENTS

SCALE: 1/2"=1'-0"

GIRDER DATA

LOCATION		GIRDER LENGTH		STRAND DATA						CONC. DATA		SHEAR REINF.				CAMBER DEFLECTION		
	GIRDER NO.			STRAIGHT		DRAPED STRANDS						ZONE 1		ZONE 2				
	S.B.	N.B.	S.B.	N.B.	P/S FORCE	gs	P/S FORCE	gm	ge	"D"	F'ci (PSI)	F'c (PSI)	"N"	MAX. SPA.	"N"	MAX. SPA.	A	B	C
	1 TO 6	1 TO 5	60'-3"	60'-3"	636.17	~~2.75~~ 3.00	115.67	~~6.75~~ 7.00	40	18'-0"	5100	6000	34	5"	8	24"	1.33	0.28	1.05
	1 TO 6	1 TO 5	~~69'-9"~~ 68'-11"	~~69'-9"~~ 68'-11"	809.68	~~2.75~~ 3.00	173.50	~~7.75~~ 8.00	40	21'-0"	5100	6000	35	5"	10	24"	2.50	0.52	1.98
	1 TO 6	1 TO 5	70'-3"	70'-3"	867.51	~~2.75~~ 3.00	173.50	~~7.75~~ 8.00	40	21'-0"	5100	6000	36	5"	10	24"	2.32	.52	1.8

⚠ ⚠ ⚠ ⚠

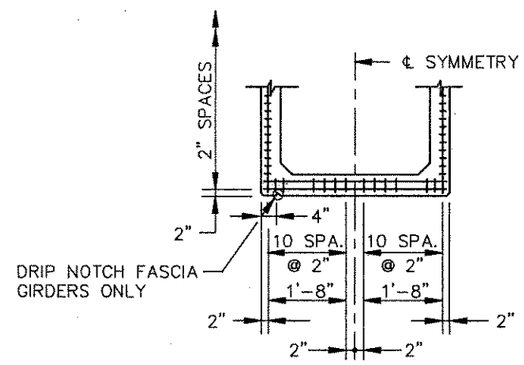

TYPICAL STRAND PATTERN

N.T.S.

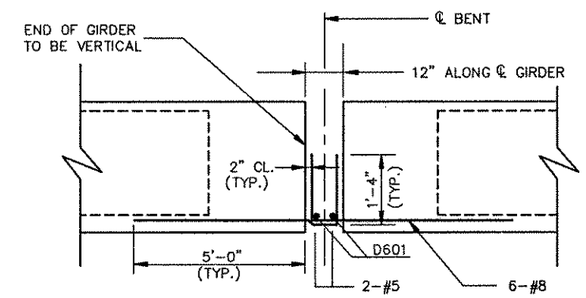

POSITIVE MOMENT CONNECTION DETAIL AT BENTS

SCALE: 1/2"=1'-0"

CAMBER NOTES

A = CAMBER LESS DEFLECTION DUE TO DEAD LOAD OF GIRDER TIMES CREEP FACTOR OF 2.0.

B = DEFLECTION DUE TO DEAD LOAD OF SLAB, PERMANENT METAL DECK FORMS AND PARAPET.

C = A – B = NET FINAL CAMBER

BEARING SEAT ELEVATION AND SLOPE AND HAUNCH DEPTH ARE CALCULATED CONSIDERING THE VALUE C.

THE THICKNESS OF HAUNCH ON GIRDERS IS TO BE VARIED TO COMPENSATE FOR ANY INACCURACIES IN THE CAMBER OF GIRDERS.

A AND B ARE THEORETICAL VALUES AND MAY VARY WITH ACTUAL CONCRETE STRENGTH AGE, VARIOUS PRESTRESSING CONDITIONS, CREEP FACTOR AND PRESTRESS LOSSES.

CAMBER & DEFLECTION VALUES A, B & C ARE GIVEN IN INCHES.

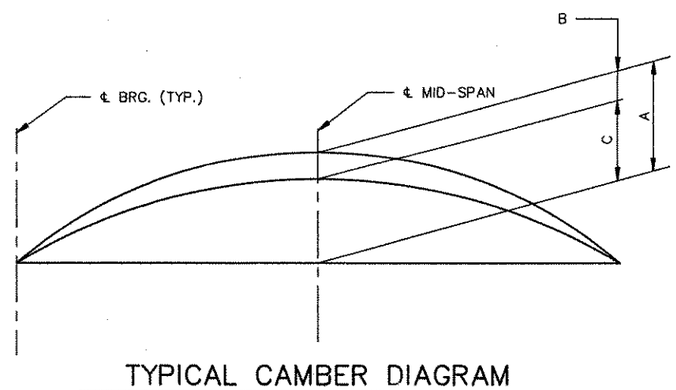

TYPICAL CAMBER DIAGRAM

N.T.S.

PRESTRESS NOTES

1. F'Ci = COMPRESSIVE STRENGTH OF CONCRETE AT RELEASE.
2. F'C = COMPRESSIVE STRENGTH OF CONCRETE AT 28 DAYS.
3. P/S FORCE = PRESTRESSING FORCE @ RELEASE IN KIPS (DRAPED & STRAIGHT GIVEN SEPARATELY).
4. PRESTRESSING STEEL SHALL BE SEVEN WIRE 1/2"ø LOW RELAXATION STRANDS CONFORMING TO ASTM A416 (GRADE 270).
5. INITIAL PRESTRESS PER STRAND SHALL BE 189 KSI.
6. CREEP AND SHRINKAGE FOR CONTINUOUS SPAN EFFECT IS BASED ON :
   (A) RELEASE OF PRESTRESS AT 1 DAY.
   (B) TIME BETWEEN BEAM CASTING AND MOVEMENT CONNECTION OF 60 DAYS.
   (C) RELATIVE HUMIDTY = 70%.
7. ALL GIRDER REINFORCEMENT THAT PROJECTS INTO THE DECK SLAB SHALL BE EPOXY COATED.
8. ALL GIRDERS ENDS ARE TO BE FABRICATED NORMAL TO THE ℄ OF GIRDER AND VERTICAL UNDER DEAD LOADS.
9. THE CONCRETE SURFACE OF THE TOP FLANGE WHICH COMES IN CONTACT WITH THE DECK SLAB IS TO RECEIVE A STIFF BROOM FINISH.

NOTES:

- FOR FRAMING PLANS SEE DWG. NO. 62 & 63
- FOR GENERAL NOTES SEE DWG. NO. 35

DWG. NO.	CONTRACT	COUNTY	FEDERAL AID PROJECT No.	SHEET No.	TOTAL SHEETS
65	83-101-02	NEW CASTLE	F-1045 (26)	350	492

ROUTE 7 OVER
EAGLE RUN
3 SPAN CONT. COMP. P/S CONC. BOX BM. BRIDGE
GIRDER DETAILS 2

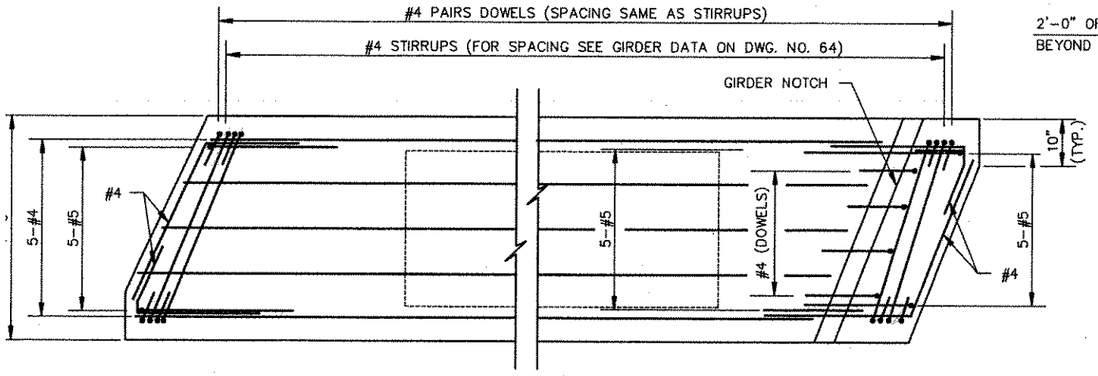

PLAN GIRDER REINFORCEMENT SPAN 1 & 3
SCALE: 3/4"=1'-0"

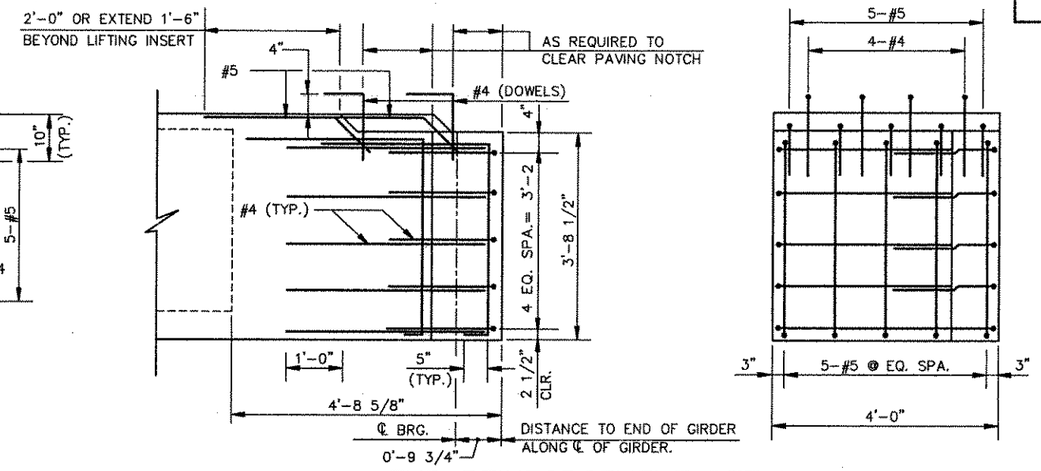

END REINFORCEMENT DETAIL
(WITH GIRDER NOTCH @ ABUTMENTS)
SCALE: 3/4"=1'-0"

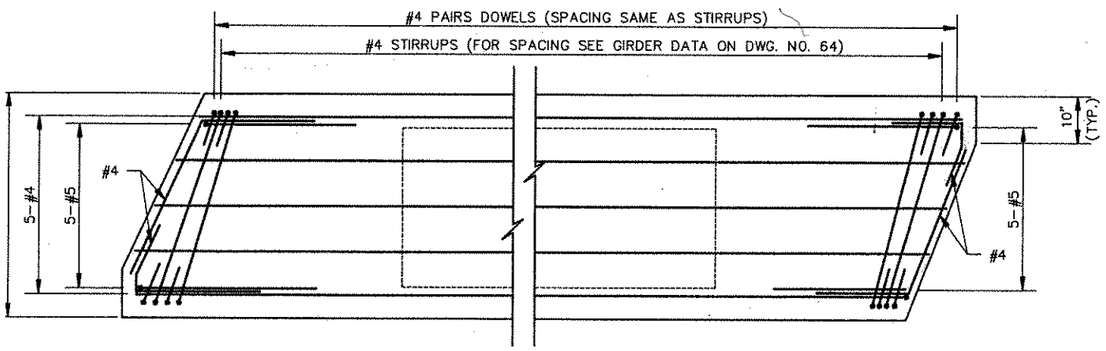

PLAN GIRDER REINFORCEMENT SPAN 2
SCALE: 3/4"=1'-0"

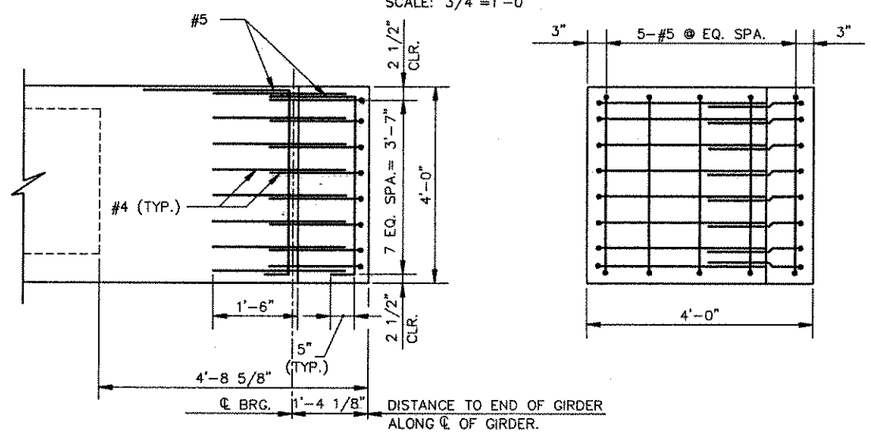

END REINFORCEMENT DETAIL
(WITHOUT GIRDER NOTCH @ BENTS)
SCALE: 3/4"=1'-0"

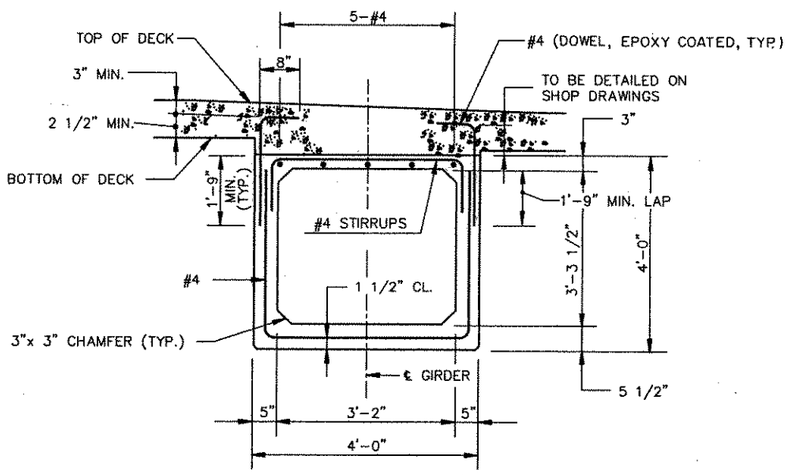

TYPICAL GIRDER SECTION
SCALE: 3/4"=1'-0"

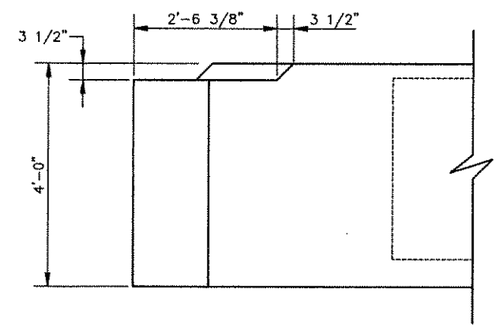

GIRDER PAVING NOTCH DETAIL
SCALE: 3/4"=1'-0"

NOTE: WORK THIS DWG. WITH DWG. NO. 64

DWG. NO.	CONTRACT	COUNTY	FEDERAL AID PROJECT No.	SHEET No.	TOTAL SHEETS
66	83-101-02	NEW CASTLE	F-1045 (26)	351	492

ROUTE 7 OVER
EAGLE RUN
3 SPAN CONT. COMP. P/S CONC. BOX BM. BRIDGE
DECK PLAN S.B.

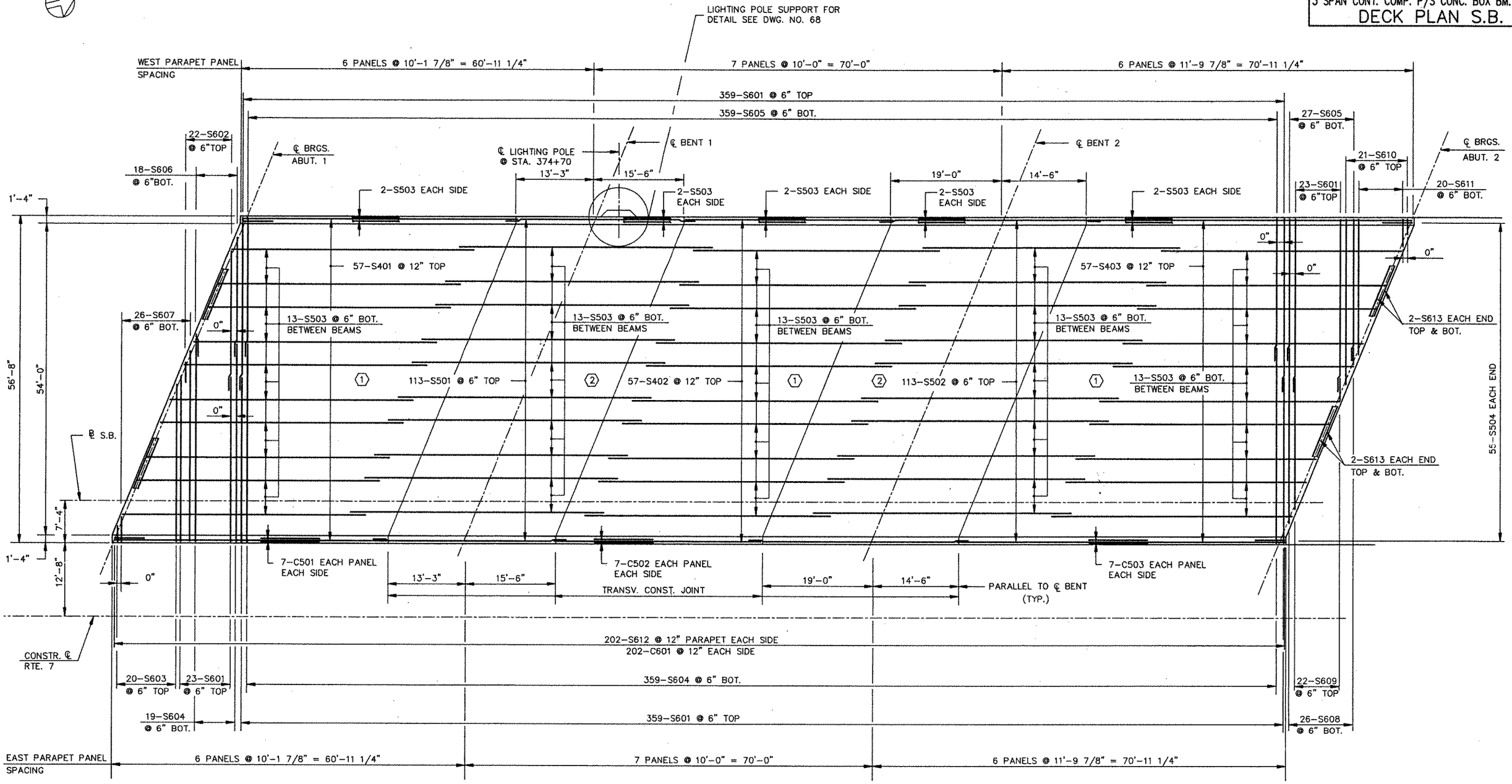

DECK PLAN
SCALE: 1/8"=1'-0"

NOTE:
- FOR NOTES SEE DWG. NO. 67

DWG. NO.	CONTRACT	COUNTY	FEDERAL AID PROJECT No.	SHEET No.	TOTAL SHEETS
67	83-101-02	NEW CASTLE	F-1045 (26)	352	492

ROUTE 7 OVER
EAGLE RUN
3 SPAN CONT. COMP. P/S CONC. BOX BM. BRIDGE
DECK PLAN N.B.

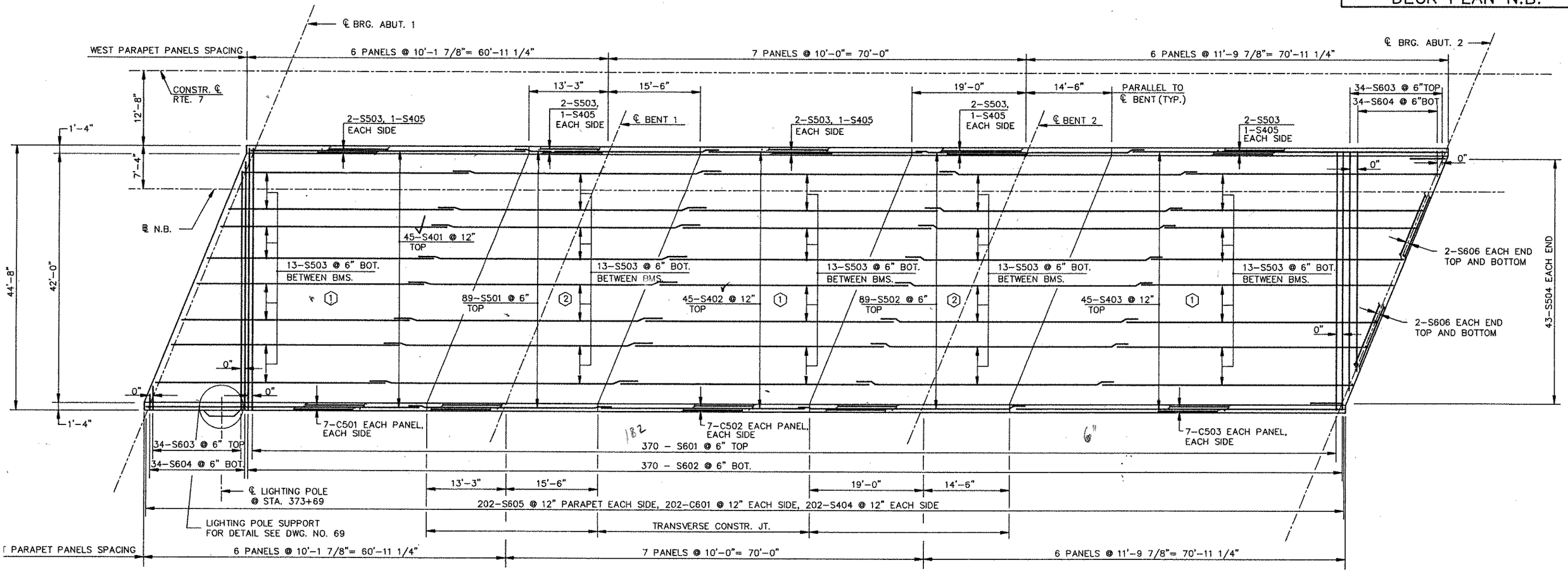

DECK PLAN
SCALE: 1/8"=1'-0"

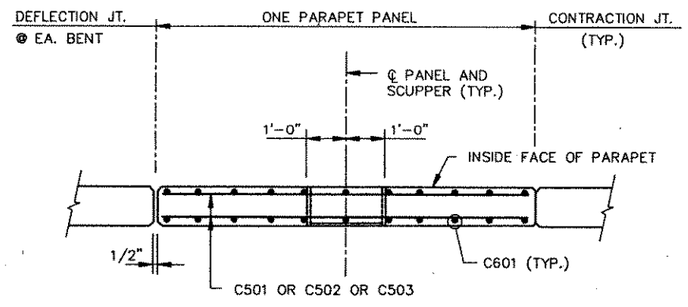

PARAPET PANEL PLAN
(TYPICAL FOR S.B. & N.B.)
N.T.S.

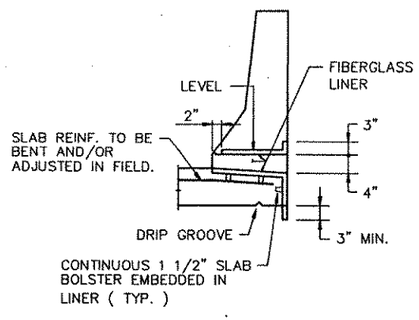

SCUPPER SECTION
N.T.S.

NOTES:

- OMIT OPENINGS IN PANELS EACH SIDE OF BENTS AND ABUTMENTS AND IN THOSE SECTIONS WHICH CARRY LIGHT POST SUPPORT BRACKETS.
- NORMAL PARAPET REINFORCING SHALL BE PROVIDED IN ALL SECTIONS WITHOUT OPENINGS.
- PARAPET OPENINGS TO BE 2' LONG.

NOTES:

- PREFABRICATED EXPANSION JOINTS SHALL BE PLACED @ ABUTMENTS 1 & 2. FOR DETAILS SEE DWG. NO. 78
- ⬡ DENOTES THE POURING SEQUENCE.
- CONTINUITY DIAPHRAGMS SHALL BE PLACED @ EACH BENT. FOR DETAILS SEE DWG. NO. 71 & 73
- INTERMEDIATE AND END DIAPHRAGMS SHALL BE PLACED AS SHOWN ON THE FRAMING PLANS DWGS. 62 & 63 . FOR DETAILS SEE DWG. NO. 70 & 72
- FOR TYPICAL DECK SECTIONS SEE DWG. NO. 68 & 69
- FOR BAR LIST SEE DWG. NO. 77
- SCUPPERS SHALL BE PLACED ALONG THE WEST PARAPET ON THE S.B. DECK AND ALONG THE EAST PARAPET ON THE N.B. DECK.
- INTERMEDIATE AND END DIAPHRAGMS SHALL BE POURED AT LEAST 2 HOURS BEFORE POURING SEQUENCE 1
- CONTINUITY DIAPHRAGMS SHALL BE POURED 2 HOURS BEFORE POURING SEQUENCE 2
- 48 HOUR INTERVAL IS REQUIRED BETWEEN POURING SEQUENCE 1 & 2

DWG. NO.	CONTRACT	COUNTY	FEDERAL AID PROJECT No.	SHEET No.	TOTAL SHEETS
68	83-101-02	NEW CASTLE	F-1045 (26)	353	492

ROUTE 7 OVER
EAGLE RUN
3 SPAN CONT. COMP. P/S CONC. BOX BM. BRIDGE
DECK SECTION S.B.

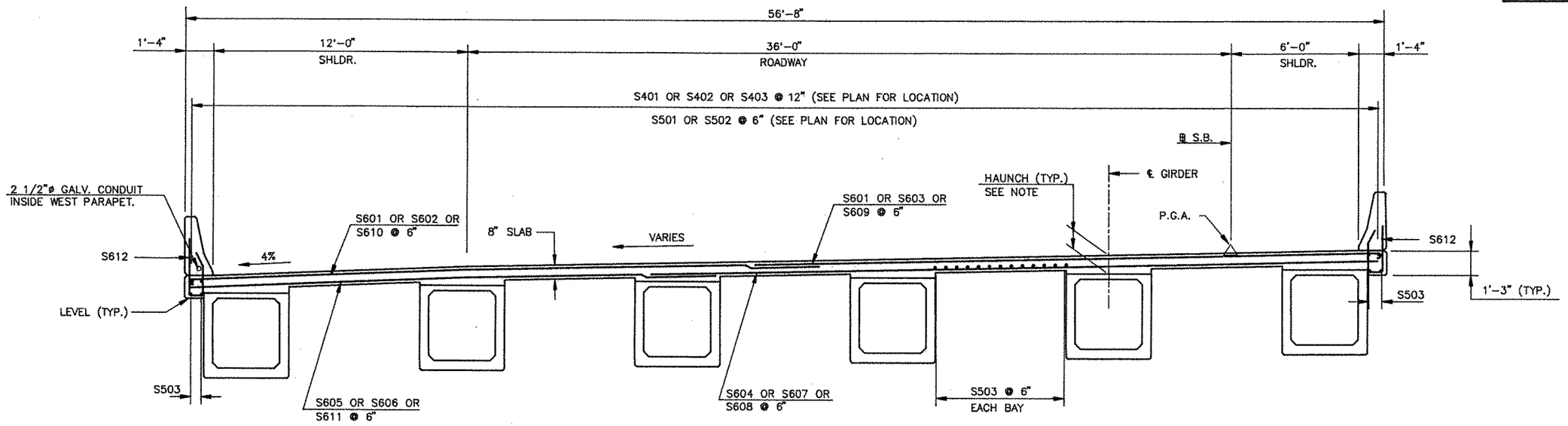

TYPICAL SECTION

SCALE: 3/8"=1'-0"

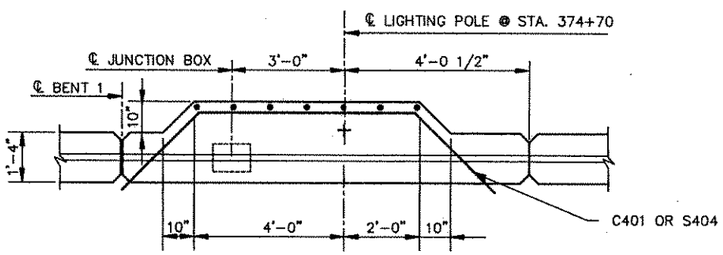

PLAN

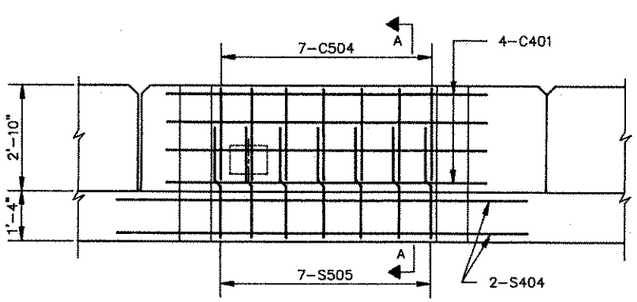

ELEVATION

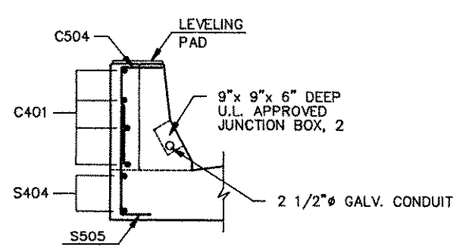

SECTION A – A

NOTE: ONLY ADDITIONAL BARS ARE SHOWN.

LIGHTING POLE SUPPORT DETAIL

SCALE: 1/2"=1'-0"

NOTE:
- FOR NOTES SEE DWG. NO. 69

DWG. NO.	CONTRACT	COUNTY	FEDERAL AID PROJECT No.	SHEET No.	TOTAL SHEETS
69	83-101-02	NEW CASTLE	F-1045 (26)	354	492

ROUTE 7 OVER
EAGLE RUN
3 SPAN CONT. COMP. P/S CONC. BOX BM. BRIDGE
DECK SECTION N.B.

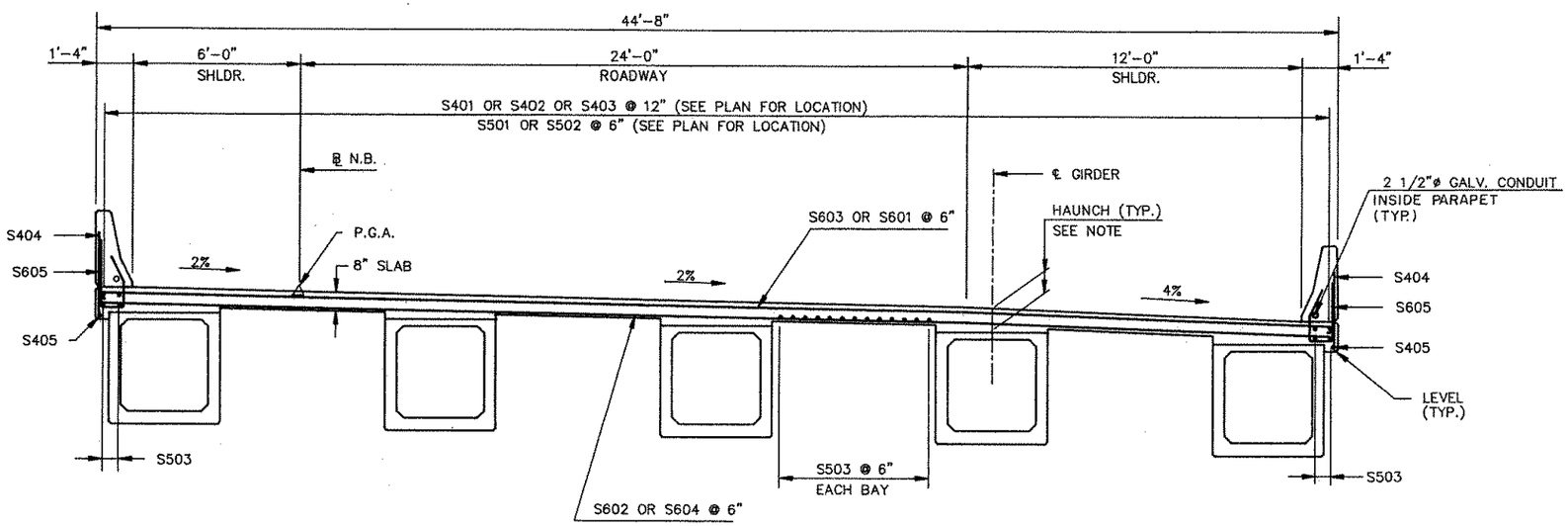

TYPICAL SECTION
SCALE: 3/8"=1'-0"

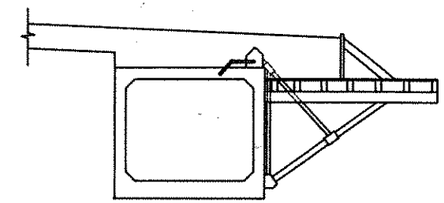

OVERHANG FORM SCHEMATIC DETAIL
N.T.S.

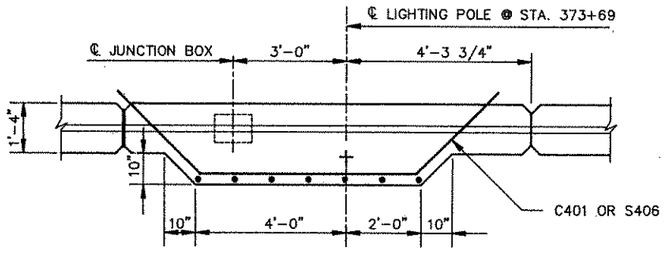

PLAN

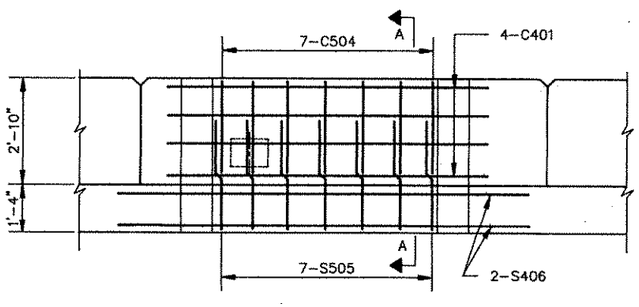

ELEVATION

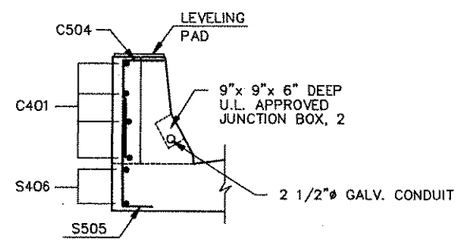

SECTION A – A

NOTE: ONLY ADDITIONAL BARS ARE SHOWN.

LIGHTING POLE SUPPORT DETAIL
SCALE: 1/2"=1'-0"

NOTES:

- FOR HAUNCH DIMENSIONS SEE TABLE MARKED DECK ELEVATIONS @ INTERSECTION OF ℄ BEARINGS & ℄ GIRDERS ON DWG. NO. 74
- FOR DECK SLAB PLAN SEE DWG. NO. 66 & 67
- FOR PARAPET REINFORCEMENT SEE DWG. NO. 67
- FOR BAR LISTS SEE DWG. NO. 77
- FOR DECK ELEVATIONS SEE DWG. NO. 75 & 76
- SUGGESTED STAY-IN-PLACE FORM DETAILS, TRANSVERSE CONSTRUCTION JOINT DETAIL & PARAPET JOINT DETAIL ON SHEET 243 ARE APPLICABLE FOR THIS SUPERSTRUCTURE.

DWG. NO.	CONTRACT	COUNTY	FEDERAL AID PROJECT No.	SHEET No.	TOTAL SHEETS
70	83-101-02	NEW CASTLE	F-1045 (26)	355	492

ROUTE 7 OVER
EAGLE RUN
3 SPAN CONT. COMP. P/S CONC. BOX BM. BRIDGE
DIAPHRAGM DETAILS 1-S.B.

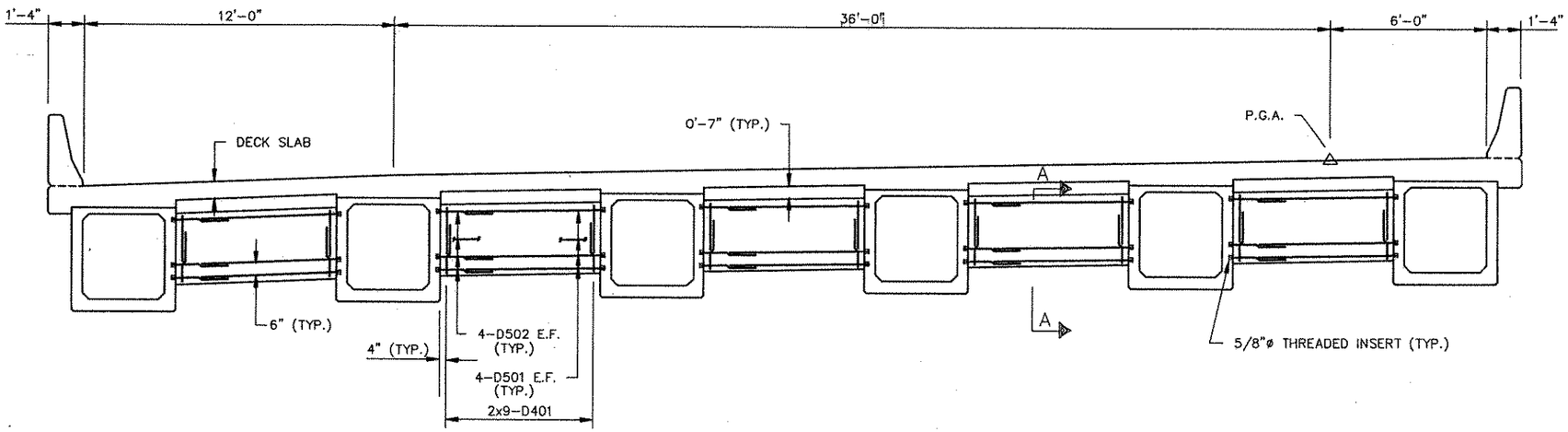

INTERMEDIATE DIAPHRAGM ELEVATION
SCALE: 3/8"=1'-0"

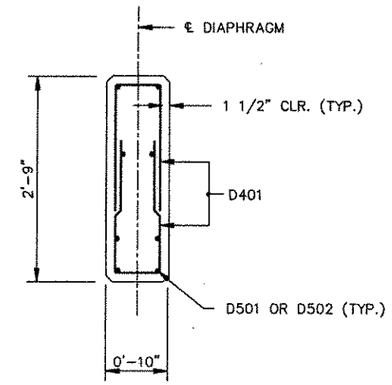

SECTION A-A
SCALE: 1"=1'-0"

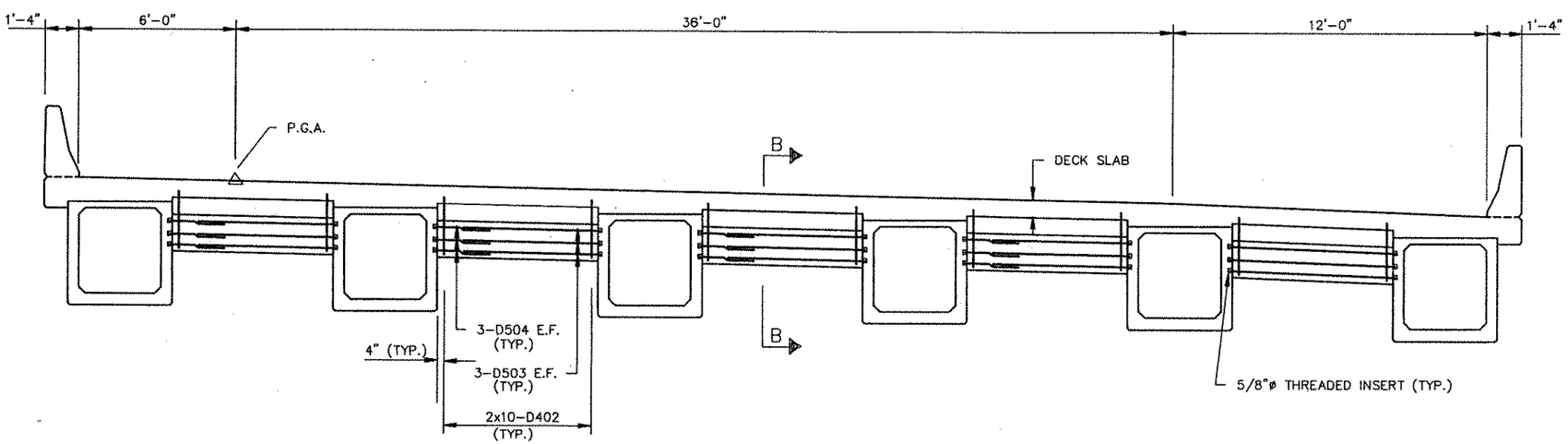

END DIAPHRAGM ELEVATION AT ABUTMENTS
SCALE: 3/8"=1'-0"

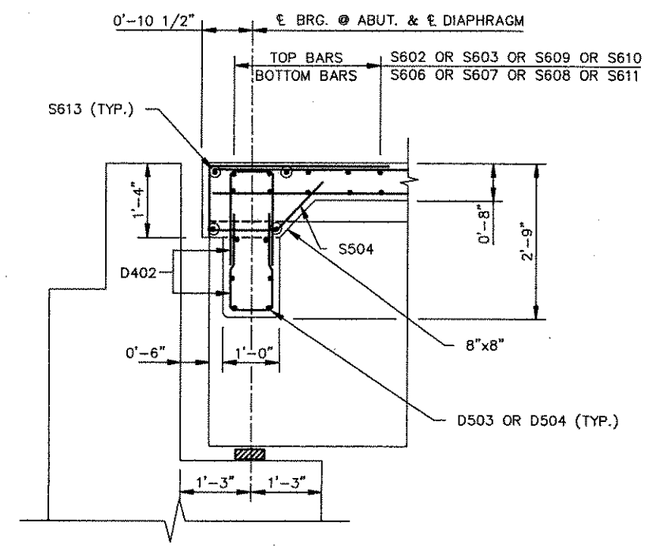

SECTION B-B
SCALE: 3/4"=1'-0"

NOTES:

- FOR LOCATION OF INTERMEDIATE DIAPHRAGMS SEE FRAMING PLAN DWG. NO. 62
- 5/8"ø THREADED INSERTS SHALL BE PLACED IN THE EXTERIOR FACE OF INSIDE FASICA GIRDERS (GIRDER LINE G6) AT ALL DIAPHRAGMS TO ACCOMMODATE FUTURE WIDENING
- FOR BAR LIST SEE DWG. NO. 77

DWG. NO.	CONTRACT	COUNTY	FEDERAL AID PROJECT No.	SHEET No.	TOTAL SHEETS
71	83-101-02	NEW CASTLE	F-1045 (26)	356	492

ROUTE 7 OVER
EAGLE RUN
3 SPAN CONT. COMP. P/S CONC. BOX BM. BRIDGE
DIAPHRAGM DETAILS 2-S.B.

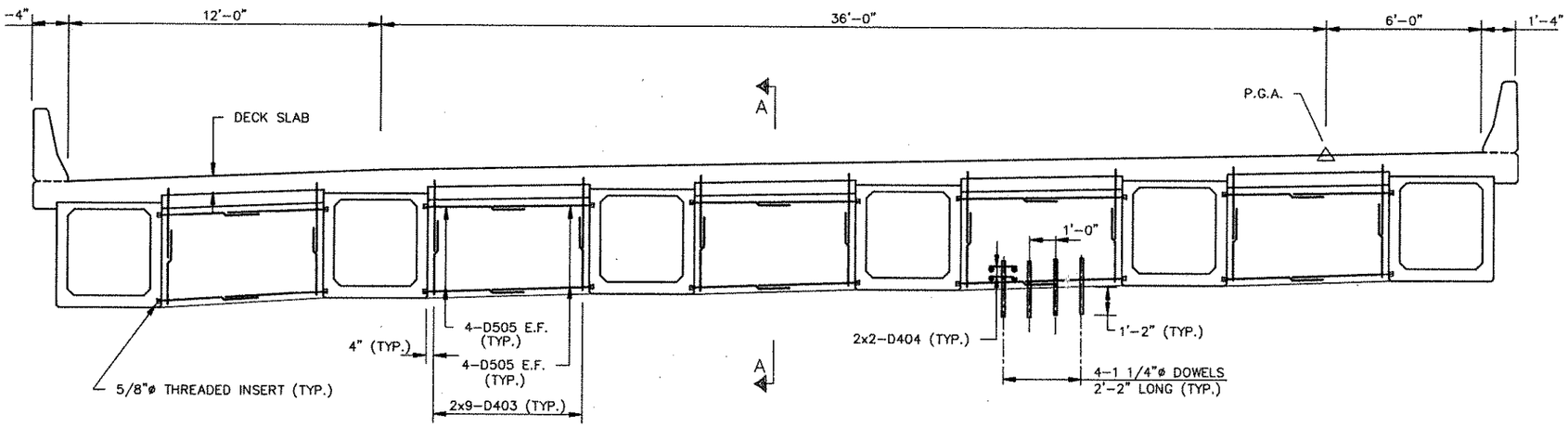

CONTINUITY DIAPHRAGM ELEVATION AT BENT 1
SCALE: 3/8"=1'-0"

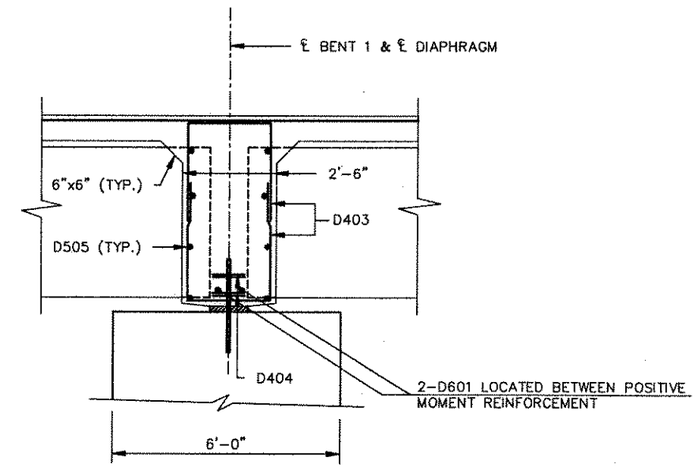

SECTION A-A
SCALE: 1/2"=1'-0"

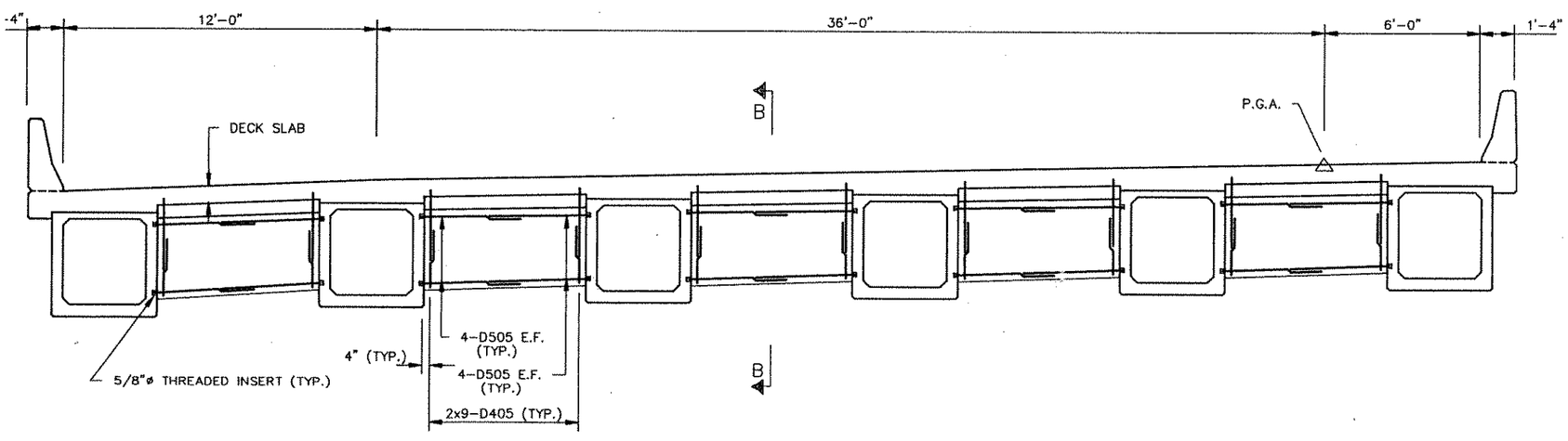

CONTINUITY DIAPHRAGM ELEVATION AT BENT 2
SCALE: 3/8"=1'-0"

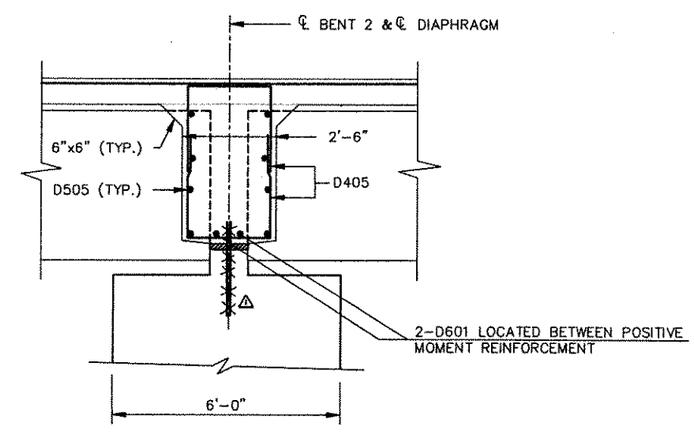

SECTION B-B
SCALE: 1/2"=1'-0"

NOTE:

- FOR NOTES SEE DWG. NO. 70

DWG. NO.	CONTRACT	COUNTY	FEDERAL AID PROJECT No.	SHEET No.	TOTAL SHEETS
72	83-101-02	NEW CASTLE	F-1045 (26)	357	492

ROUTE 7 OVER
EAGLE RUN
3 SPAN CONT. COMP. P/S CONC. BOX BM. BRIDGE
DIAPHRAGM DETAILS 1-N.B.

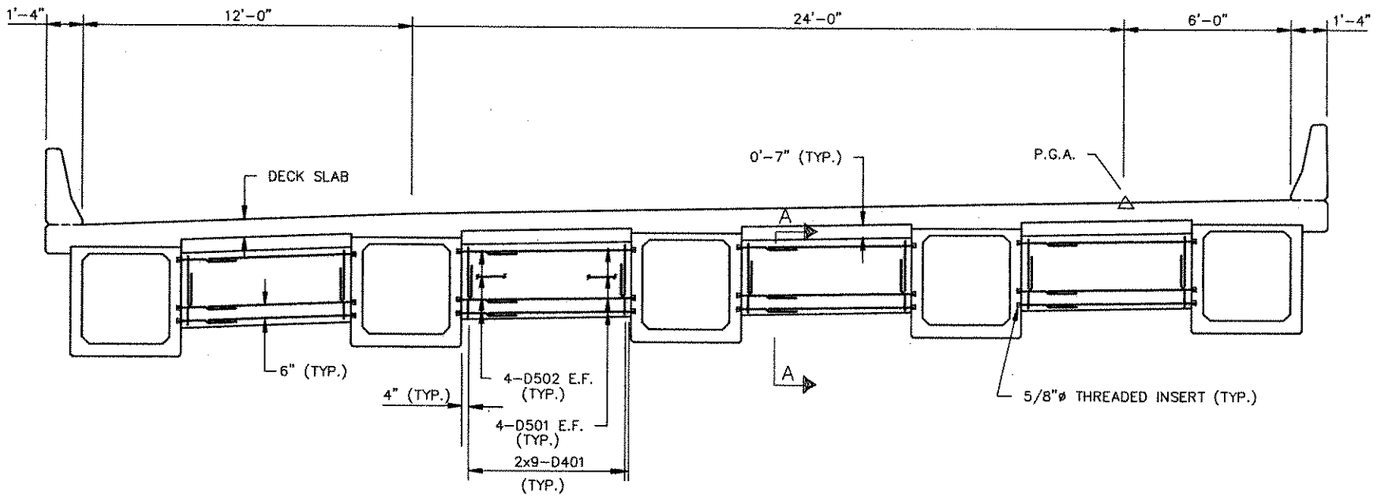

INTERMEDIATE DIAPHRAGM ELEVATION
SCALE: 3/8"=1'-0"

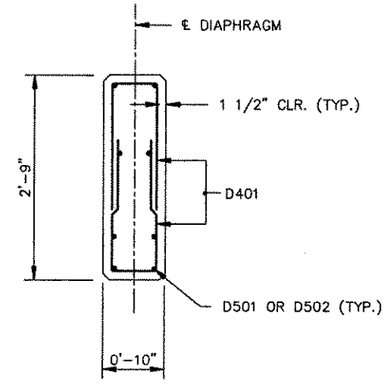

SECTION A-A
SCALE: 1"=1'-0"

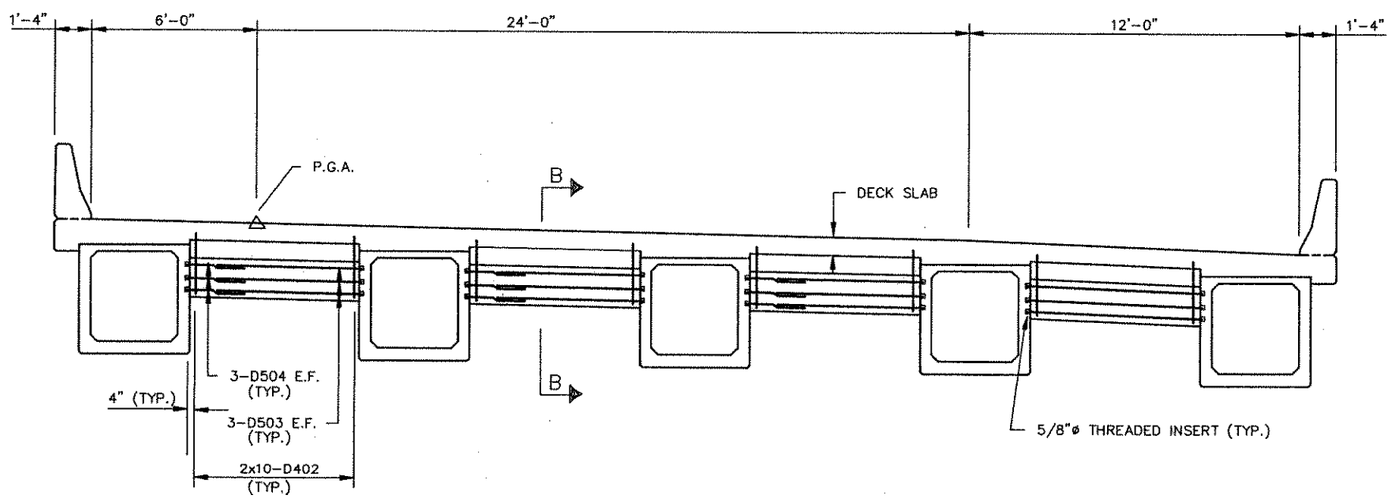

END DIAPHRAGM ELEVATION AT ABUTMENTS
SCALE: 3/8"=1'-0"

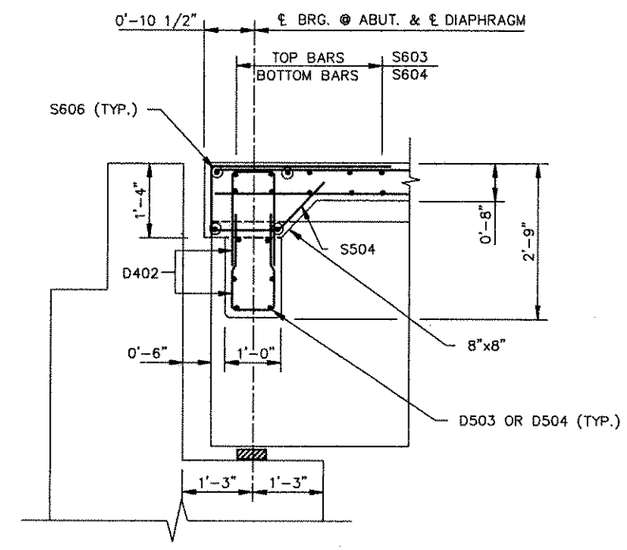

SECTION B-B
SCALE: 3/4"=1'-0"

NOTES:

- FOR LOCATION OF INTERMEDIATE DIAPHRAGMS SEE FRAMING PLAN DWG. NO. 63
- 5/8"ø THREADED INSERTS SHALL BE PLACED IN THE EXTERIOR FACE OF INSIDE FASICA GIRDERS (GIRDER LINE G1) AT ALL DIAPHRAGMS TO ACCOMMODATE FUTURE WIDENING
- FOR BAR LIST SEE DWG. NO. 77

DWG. NO.	CONTRACT	COUNTY	FEDERAL AID PROJECT No.	SHEET No.	TOTAL SHEETS
73	83-101-02	NEW CASTLE	F-1045 (26)	358	492

ROUTE 7 OVER
EAGLE RUN
3 SPAN CONT. COMP. P/S CONC. BOX BM. BRIDGE
DIAPHRAGM DETAILS 2-N.B.

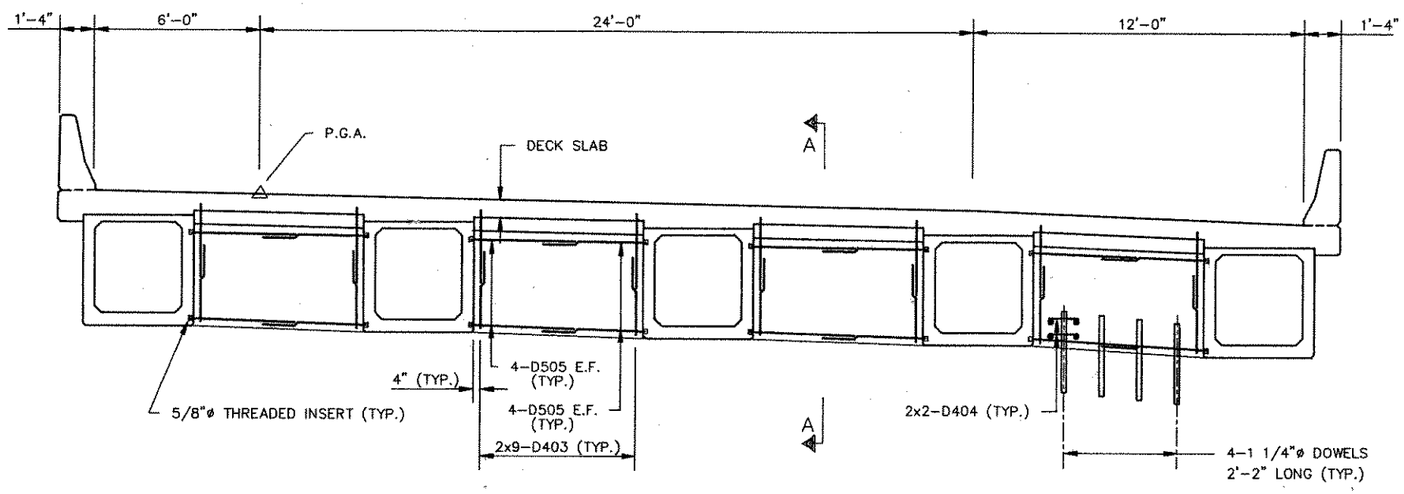

CONTINUITY DIAPHRAGM ELEVATION AT BENT 1
SCALE: 3/8"=1'-0"

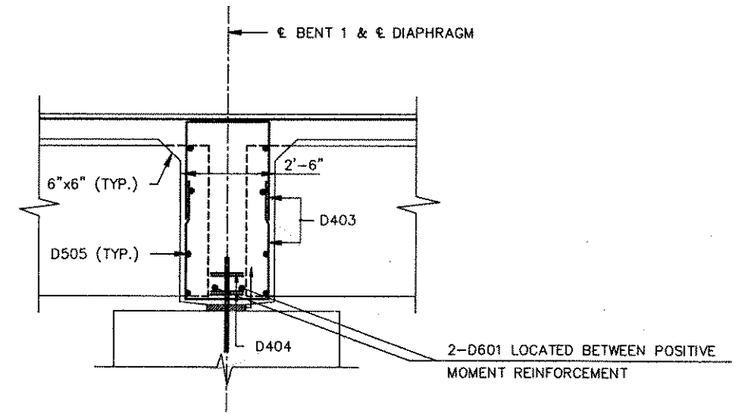

SECTION A-A
SCALE: 1/2"=1'-0"

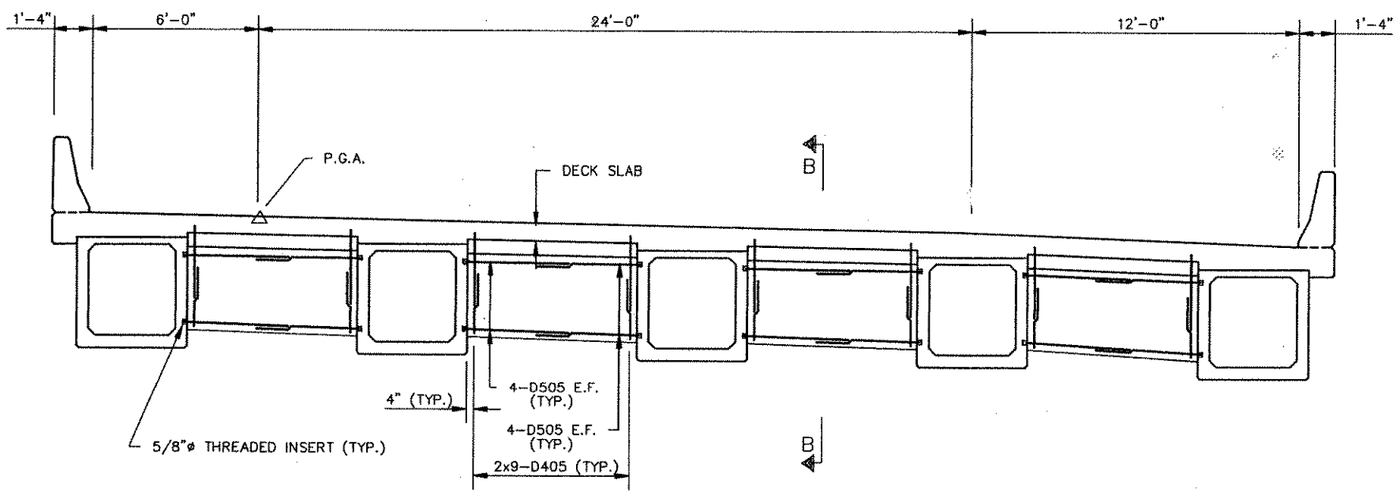

CONTINUITY DIAPHRAGM ELEVATION AT BENT 2
SCALE: 3/8"=1'-0"

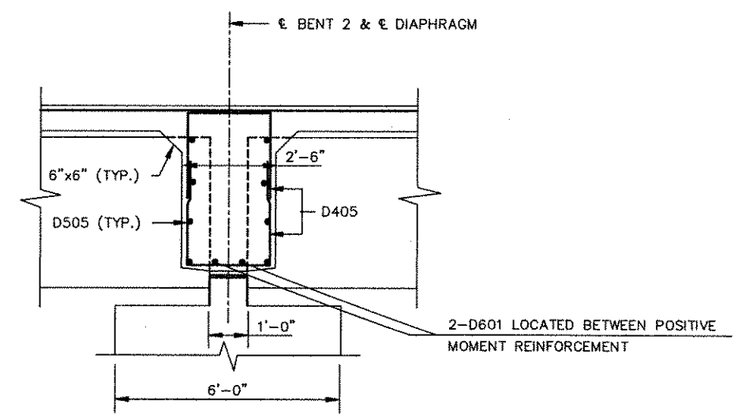

SECTION B-B
SCALE: 1/2"=1'-0"

NOTE:
- FOR NOTES SEE DWG. NO. 72

DWG. NO.	CONTRACT	COUNTY	FEDERAL AID PROJECT No.	SHEET No.	TOTAL SHEETS
74	83-101-02	NEW CASTLE	F-1045 (26)	359	492

ROUTE 7 OVER
EAGLE RUN
3 SPAN CONT. COMP. P/S CONC. BOX BM. BRIDGE

DECK ELEVATIONS

DECK ELEVATIONS AT 10' INTERVALS

STATION	A	B	P.G.A./S.B.	C	D	P.G.A./N.B.	E	F
373+00	–	–	–	–	26.79	26.67	26.19	25.71
373+10	–	–	–	–	26.86	26.74	26.26	25.78
373+20	–	–	–	–	26.94	26.82	26.34	25.86
373+30	–	–	–	–	27.01	26.89	26.41	25.93
373+40	–	–	–	–	27.09	26.97	26.49	26.01
373+50	–	27.05	27.04	27.05	27.16	27.04	26.56	26.08
373+60	–	27.05	27.12	27.14	27.24	27.12	26.64	26.16
373+70	–	27.06	27.20	27.23	27.33	27.20	26.73	26.25
373+80	–	27.07	27.28	27.32	27.41	27.28	26.81	26.33
373+90	–	27.09	27.37	27.42	27.50	27.37	26.90	26.42
374+00	26.62	27.10	27.46	27.52	27.58	27.46	26.98	26.50
374+10	26.64	27.12	27.55	27.62	27.67	27.55	27.07	26.59
374+20	26.65	27.13	27.64	27.72	27.77	27.64	27.17	26.69
374+30	26.68	27.16	27.73	~~27.80~~ 27.83	27.86	27.73	27.26	26.78
374+40	26.71	27.19	27.83	~~27.90~~ 27.84	27.96	27.83	27.36	26.88
374+50	26.73	27.22	27.93	28.05	28.05	27.93	27.45	26.97
374+60	26.84	27.32	28.03	28.15	28.15	28.03	27.55	27.07
374+70	26.94	27.42	28.13	28.25	28.26	28.13	27.66	27.18

STATION	A	B	P.G.A./S.B.	C	D	P.G.A./N.B.	E	F
374+80	27.05	27.53	28.24	28.36	28.36	28.24	27.76	27.28
374+90	27.15	27.63	28.35	28.47	28.47	28.35	27.87	27.39
375+00	27.25	27.73	28.45	28.57	28.57	28.45	27.97	27.49
375+10	27.36	27.84	28.56	28.68	28.68	28.56	28.08	27.60
375+20	27.47	27.95	28.67	28.79	28.79	28.67	28.19	27.71
375+30	27.58	28.06	28.78	28.90	28.90	28.78	28.30	27.82
375+40	27.69	28.17	28.89	29.01	~~29.13~~ 29.01	28.89	28.41	27.93
375+50	27.80	28.28	29.00	29.13	29.12	29.00	28.52	28.04
375+60	27.91	28.39	29.11	29.23	29.23	29.11	28.63	28.15
375+70	28.02	28.50	29.22	29.34	29.34	29.22	28.74	28.26
375+80	28.13	28.61	29.33	29.45	29.45	29.33	28.85	28.37
375+90	28.24	28.72	29.44	29.56	29.56	29.44	28.96	28.48
376+00	28.35	28.83	29.55	29.67	29.67	29.55	29.07	28.59
376+10	28.46	28.94	29.66	29.78	29.78	29.66	29.18	28.70
376+20	28.57	29.05	29.77	29.89	29.89	29.77	29.29	28.81
376+30	28.68	29.16	29.88	30.00	30.00	29.88	29.40	28.92
–	–	–	–	–	–	–	–	–
–	–	–	–	–	–	–	–	–

DECK ELEVATIONS AT INTERSECTIONS OF ℄ BEARINGS AND ℄ GIRDERS

	GIRDER NO.	ABUTMENT 1	BENT 1		BENT 2		ABUTMENT 2
	LOCATION	℄ BRG.	SOUTH BRG.	NORTH BRG.	SOUTH BRG.	NORTH BRG.	℄ BRG.
SOUTHBOUND	G1	26.68	26.91	26.95	27.65	27.69	28.45
	G2	27.09	27.28	27.32	28.02	28.06	28.82
	G3	27.18	27.44	27.48	28.18	28.22	28.98
	G4	27.24	27.60	27.64	28.35	28.39	29.15
	G5	27.29	27.76	27.80	28.50	28.54	29.30
	G6	27.33	27.92	27.96	28.65	28.69	29.45
NORTHBOUND	G1	27.31	27.82	27.86	28.53	28.57	29.33
	G2	27.07	27.58	27.62	28.29	28.33	29.08
	G3	26.84	27.35	27.39	28.05	28.09	~~28.94~~ 28.84
	G4	26.58	27.09	27.13	27.78	27.82	28.58
	G5	26.16	26.66	26.70	27.35	29.39	28.14
HAUNCH		1'-0 1/2"	1'-0 1/2"		1'-0 1/2"		1'-0 1/2"

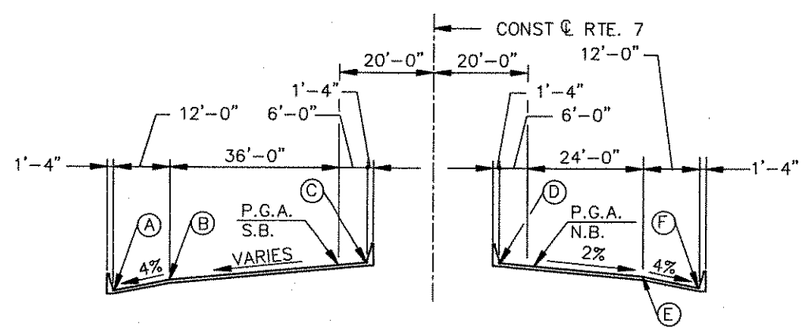

SOUTHBOUND NORTHBOUND

TYPICAL CROSS SECTION

SCALE: 1/16"=1'-0"

DWG. NO.	CONTRACT	COUNTY	FEDERAL AID PROJECT No.	SHEET No.	TOTAL SHEETS
75	83-101-02	NEW CASTLE	F-1045 (26)	360	492

ROUTE 7 OVER
EAGLE RUN
3 SPAN CONT. COMP. P/S CONC. BOX BM. BRIDGE
DECK ELEVATIONS S.B.

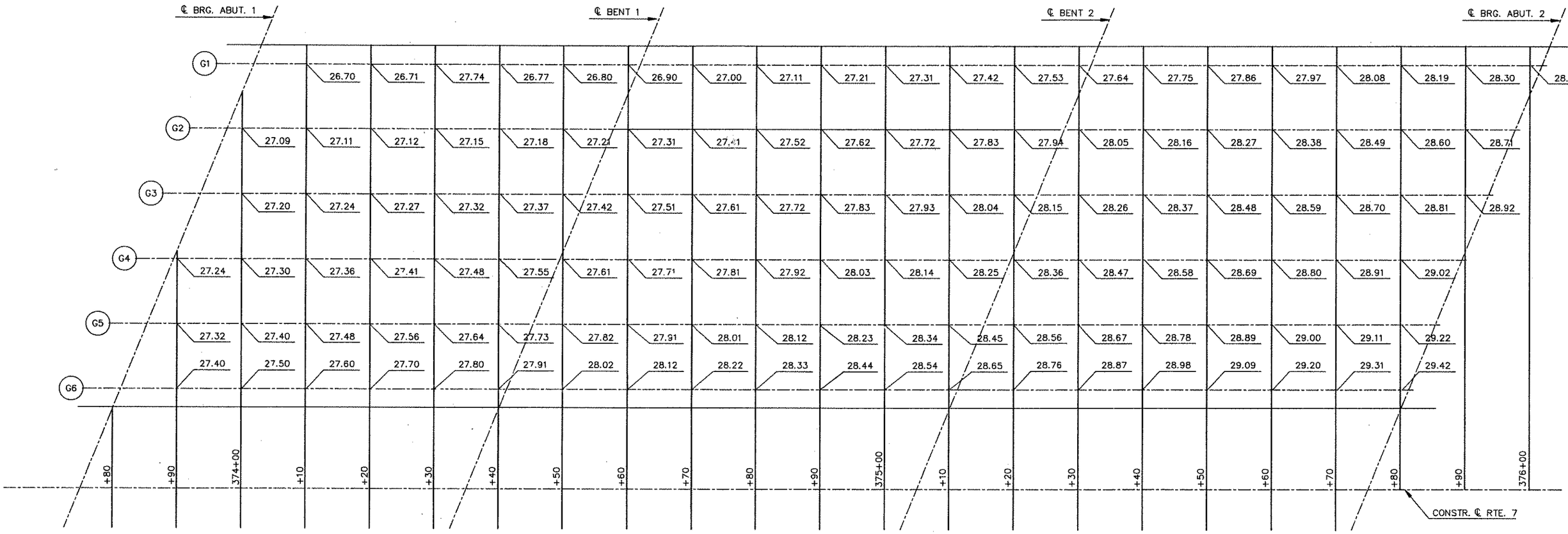

DECK ELEVATIONS AT ℄ GIRDERS

N.T.S.

DWG. NO.	CONTRACT	COUNTY	FEDERAL AID PROJECT No.	SHEET No.	TOTAL SHEETS
76	83-101-02	NEW CASTLE	F-1045 (26)	361	492

ROUTE 7 OVER
EAGLE RUN
3 SPAN CONT. COMP. P/S CONC. BOX BM. BRIDGE
DECK ELEVATIONS N.B.

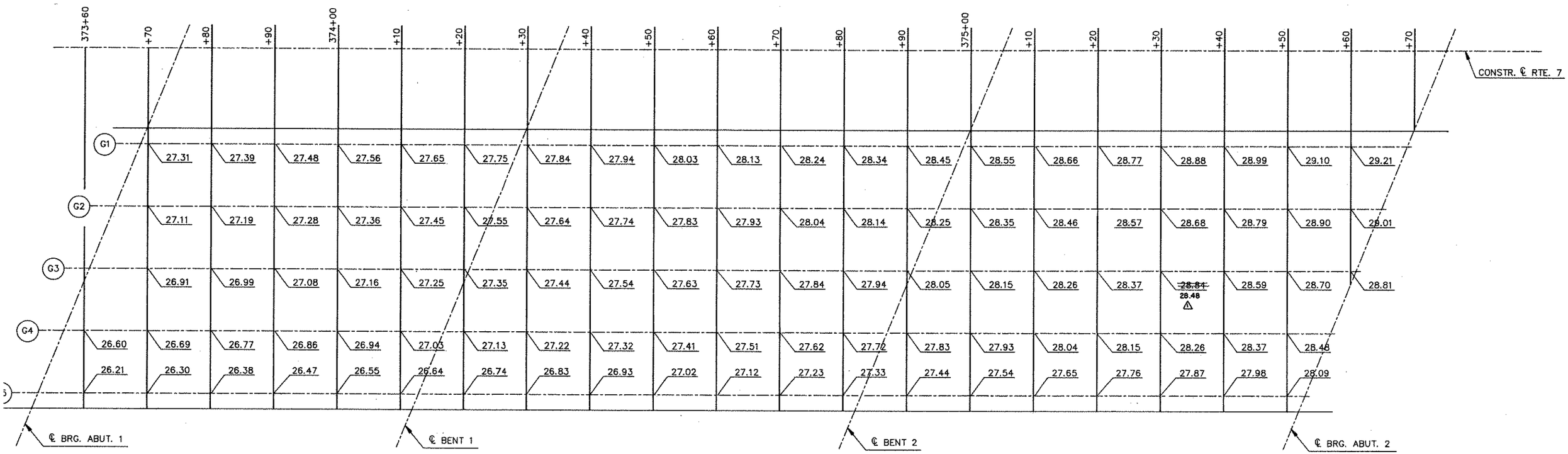

DECK ELEVATIONS AT ℄ GIRDERS

N.T.S.

NOTES:

- THIS DRAWING IS A SCHEMATIC REPRESENTATION SHOWING DECK ELEVATIONS AT 10' INTERVALS ALONG THE ℄ OF GIRDERS.
- FOR DECK ELEVATIONS AT THE INTERSECTION OF THE ℄ OF BEARINGS AND THE ℄ OF THE GIRDERS AT EACH SUBSTRUCTURE UNIT SEE DWG. NO. 74
- AFTER ALL GIRDERS HAVE BEEN ERECTED, THE ENGINEER SHALL TAKE ELEVATIONS ALONG THE TOPS OF THE GIRDERS AT POINTS WHERE THE ELEVATIONS ARE SHOWN ABOVE.
- FOR GEOMETRIC DATA SEE STAKE-OUT PLAN DWG. NO. 37 AND FRAMING PLANS SEE DWG. NO. 62 & 63

REINFORCEMENT BAR SCHEDULE

DWG. NO.	CONTRACT	COUNTY	FEDERAL AID PROJECT No.	SHEET No.	TOTAL SHEETS
77	83-101-02	NEW CASTLE	F-1045 (26)	362	492

ROUTE 7 OVER
EAGLE RUN
3 SPAN CONT. COMP. P/S CONC. BOX BM. BRIDGE
SUPERSTRUCTURE BAR LIST

SOUTH BOUND DECK

SIZE	LENGTH	NO.	TYPE	A	B	C	D	E	F	G	H	J	K	R	REMARKS
4	47'-3"	57	STR												
4	35'-0"	57	STR												
4	56'-0"	57	STR												
4	11'-9"	2	20	3"-0"	5'-9"	3'-0"					2'-1 1/2"				
5	35'-3"	113	STR												
5	40'-0"	113	STR												
5	42'-4"	345	STR												
5	6'-9"	110	11	1'-3"	1'-2"	1'-1"	3'-3"				0'-11"				
5	3'-11"	7	5	3'-0"	0'-11"	0'-0"							0'-0"		
6	30'-8"	764	2	0'-8"	30'-0"					0'-0"		0'-6"			
6	4'-0" TO 28'-0"	22	STR												VARY EACH BY 1'-1 3/4"
6	3'-2" TO 29'-8"	20	2	0'-8"	2'-6" TO 29'-0"					0'-0"		0'-6"			VARY B BY 1'-4 3/4"
6	34'-6"	378	STR												
6	24'-4"	386	STR												
6	4'-0" TO 23'-4"	18	STR												VARY EACH BY 1'-1 5/8"
6	2'-6" TO 33'-6"	26	STR												VARY EACH BY 1'-2 7/8"
6	2'-6" TO 32'-8"	26	STR												VARY EACH BY 1'-2 1/2"
6	4'-0" TO 28'-0"	22	STR												VARY EACH BY 1'-1 3/4"
6	3'-2" TO 29'-8"	21	2	0'-8"	2'-6" TO 29'-0"					0'-0"		0'-6"			VARY B BY 1'-4"
6	4'-0" TO 23'-4"	20	STR												VARY EACH BY 1'-0 1/4"
6	5'-7"	404	11	1'-6"	0'-11"	0'-8"	2'-6"				1'-2 3/4"				
6	32'-0"	16	STR												
4	8'-11"	4	20	1'-7"	5'-9"	1'-7"					1'-1 1/2"				
5	9'-10"	84	STR												
5	9'-8"	98	STR												
5	11'-5"	84	STR												
5	3'-5"	7	5	2'-6"	0'-11"	0'-0"							0'-0"		
6	5'-7"	404	18	2'-5"	0'-9"	2'-5"							0'-3"	0'-3"	
5/8"ø		624	STR												THREADED INSERTS

NORTH BOUND DECK

MARK	SIZE	LENGTH	NO.	TYPE	A	B	C	D	E	F	G	H	J	K	R	REMARKS
S401	4	47'-3"	45	STR												
S402	4	35'-0"	45	STR												
S403	4	56'-0"	45	STR												
S404	4	3'-0"	404	STR												
S405	4	42'-4"	10	STR												
S406	4	11'-9"	2	20	3'-0"	5'-9"	3'-0"					2'-1 1/2"				
S501	5	35'-3"	89	STR												
S502	5	40'-0"	89	STR												
S503	5	42'-4"	280	STR												
S504	5	6'-9"	86	11	1'-3"	1'-2"	1'-1"	3'-3"				0'-11"				
S505	5	3'-11"	7	5	3'-0"	0'-11"	0'-0"							0'-0"		
S601	6	45'-8"	370	2	0'-8"	44'-4"					0'-8"		0'-6"			
S602	6	44'-4"	370	STR												
S603	6	3'-2" TO 43'-1"	68	2	0'-8"	2'-6" TO 42'-5"					0'-0"		0'-6"			2, VARY B BY 1'-2 1/2"
S604	6	2'-6" TO 42'-5"	68	STR												2, EACH VARY BY 1'-2 1/2"
S605	6	5'-11"	404	11	1'-6"	0'-11"	1'-0"	2'-6"				1'-2 3/4"				
S606	6	25'-6"	16	STR												
C401	4	8'-11"	4	20	1'-7"	5'-9"	1'-7"					1'-1 1/2"				
C501	5	9'-10"	84	STR												
C502	5	9'-8"	98	STR												
C503	5	11'-5"	84	STR												
C504	5	3'-5"	7	5	2'-6"	0'-11"	0'-0"							0'-0"		
C601	6	5'-7"	404	18	2'-5"	0'-9"	2'-5"							0'-3"	0'-3"	
*	5/8"ø		520	STR												THREADED INSERTS

S.B. DIAPHRAGMS

SIZE	LENGTH	NO.	TYPE	A	B	C	D	E	F	G	H	J	K	R	REMARKS
4	4'-11"	270	5	2'-2"	0'-7"	2'-2"							0'-0"		
4	5'-1"	200	5	2'-2"	0'-9"	2'-2"							0'-0"		
4	7'-8"	90	5	2'-9"	2'-2"	2'-9"							0'-0"		
4	2'-3"	80	5	0'-9"	0'-9"	0'-9"							0'-0"		
4	6'-10"	90	5	2'-4"	2'-2"	2'-4"							0'-0"		
5	5'-6"	120	STR												
5	2'-0"	120	STR												
5	5'-10"	60	STR												
5	2'-2"	60	STR												
5	4'-0"	160	STR												
6	59'-0"	4	STR												

N.B. DIAPHRAGMS

MARK	SIZE	LENGTH	NO.	TYPE	A	B	C	D	E	F	G	H	J	K	R	REMARKS
D401	4	4'-11"	216	5	2'-2"	0'-7"	2'-2"							0'-0"		
D402	4	5'-1"	160	5	2'-2"	0'-9"	2'-2"							0'-0"		
D403	4	7'-8"	72	5	2'-9"	2'-2"	2'-9"							0'-0"		
D404	4	2'-3"	64	5	0'-9"	0'-9"	0'-9"							0'-0"		
D405	4	6'-10"	72	5	2'-4"	2'-2"	2'-4"							0'-0"		
D501	5	5'-6"	96	STR												
D502	5	2'-0"	96	STR												
D503	5	5'-10"	48	STR												
D504	5	2'-2"	48	STR												
D505	5	4'-0"	128	STR												
D601	6	46'-0"	4	STR												

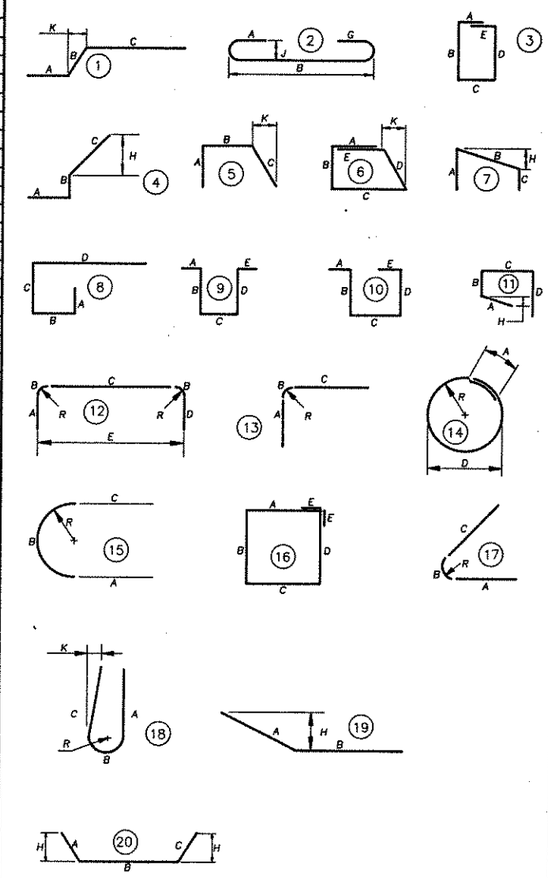

- *Threaded Inserts to be paid under Section 623000*
- *All bars in Superstructure are Epoxy Coated.*
- *All dimensions are out to out of bar except "A" and "G" on standard 135° and 180° hooks, and "R" which is shown to the inside of the bar.*
- *Figures in circles show types.*

DWG. NO.	CONTRACT	COUNTY	FEDERAL AID PROJECT No.	SHEET No.	TOTAL SHEETS
78	83-101-02	NEW CASTLE	F-1045 (26)	363	492

ROUTE 7 OVER
EAGLE RUN
3 SPAN CONT. COMP. P/S CONC. BOX BM. BRIDGE

EXPANSION JOINT DETAILS

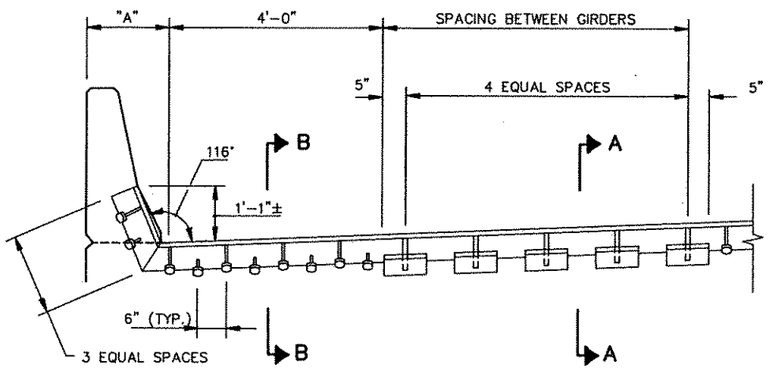

NOTE: • FOR DIMENSION "A", WORK WITH DWG. NO. 62 & 63

PARTIAL ELEVATION @ ABUTMENT

SCALE: 3/4"=1'-0"

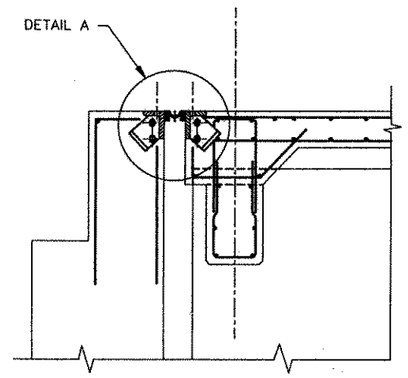

{TO IDENTIFY BAR REINFORCEMENT, IN DIAPHRAGM SEE DWG. NO. 70 & 72}

SECTION A–A @ DIAPHRAGM

SCALE: 3/4"=1'-0"

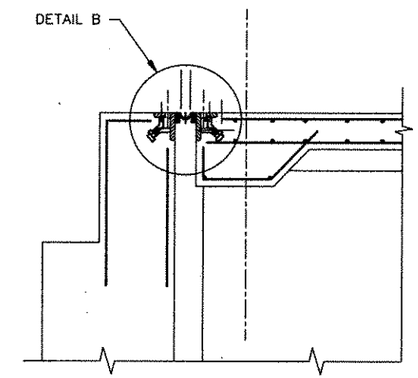

SECTION B–B @ GIRDER

SCALE: 3/4"=1'-0"

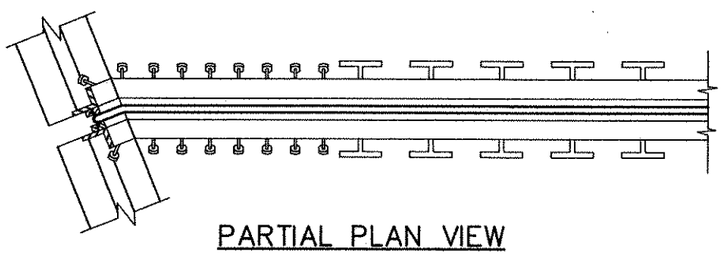

PARTIAL PLAN VIEW

SCALE: 3/4"=1'-0"

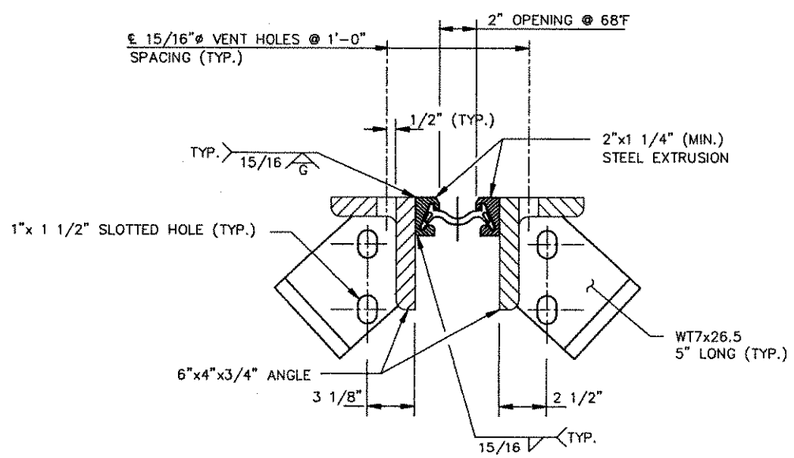

DETAIL A

SCALE: 3"=1'-0"

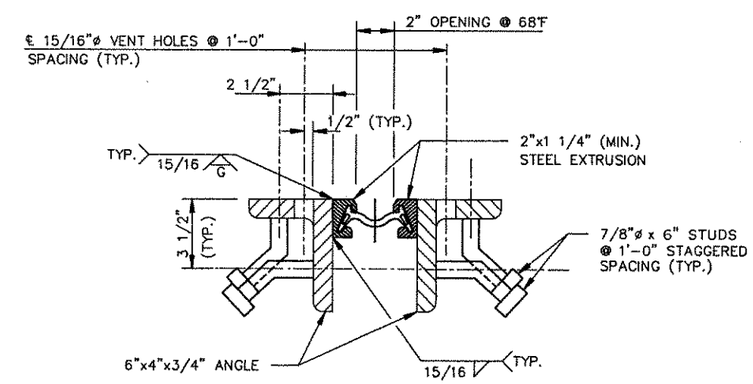

DETAIL B

SCALE: 3"=1'-0"

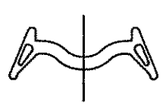

STRIP SEAL DETAIL

(2" MOVEMENT)

N.T.S.

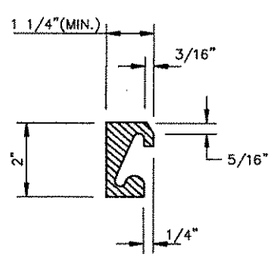

STEEL EXTRUSION DETAIL

N.T.S.

NOTE:

• FOR EXPANSION JOINT NOTES SEE SHEET NO. 251 (NOTES 1 TO 7)

DWG. NO.	CONTRACT	COUNTY	FEDERAL AID PROJECT No.	SHEET No.	TOTAL SHEETS
79	83-101-02	NEW CASTLE	F-1045 (26)	364	492

ROUTE 7 OVER
EAGLE RUN
3 SPAN CONT. COMP. P/S CONC. BOX BM. BRIDGE

APPROACH SLAB

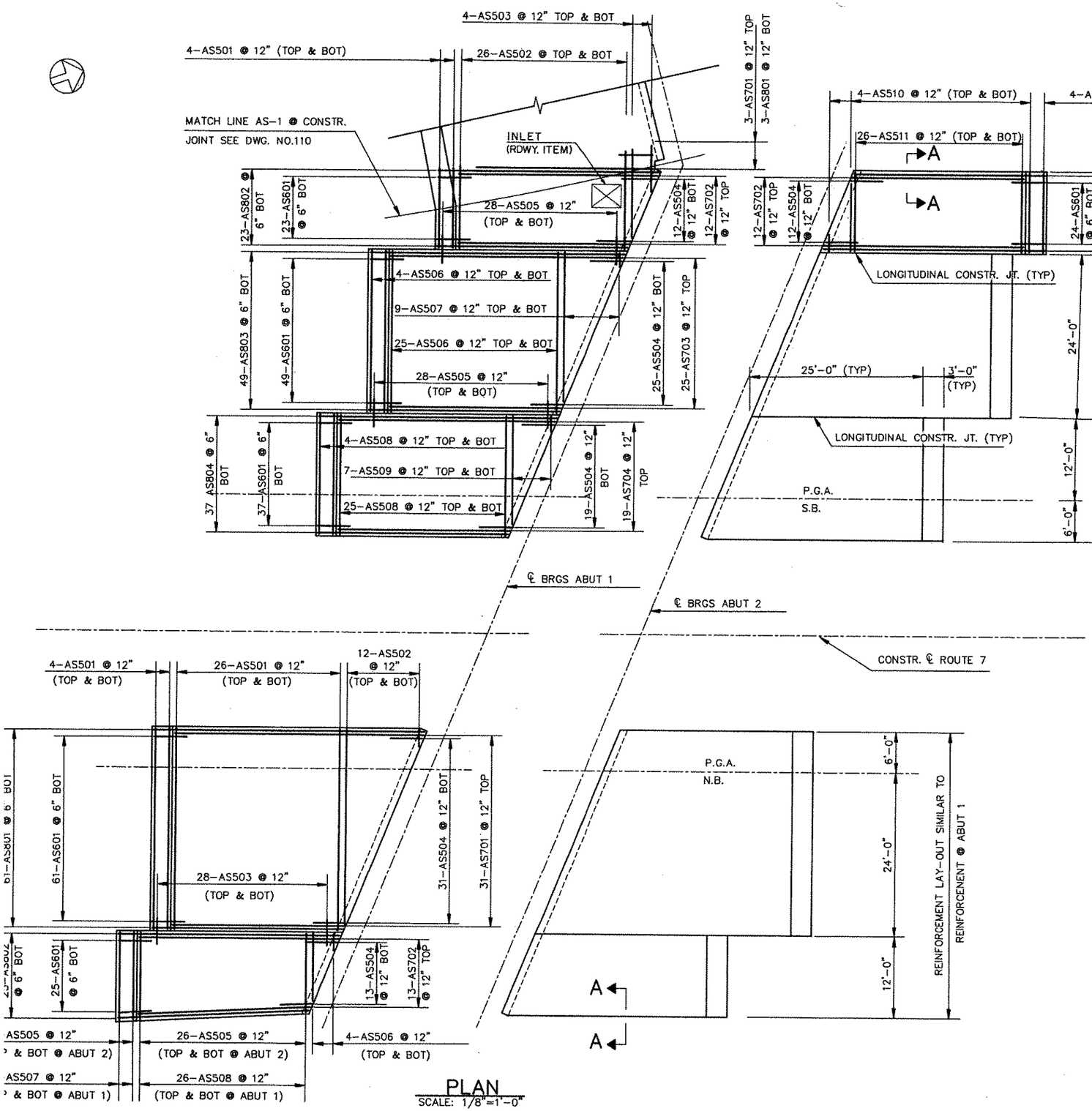

PLAN
SCALE: 1/8"=1'-0"

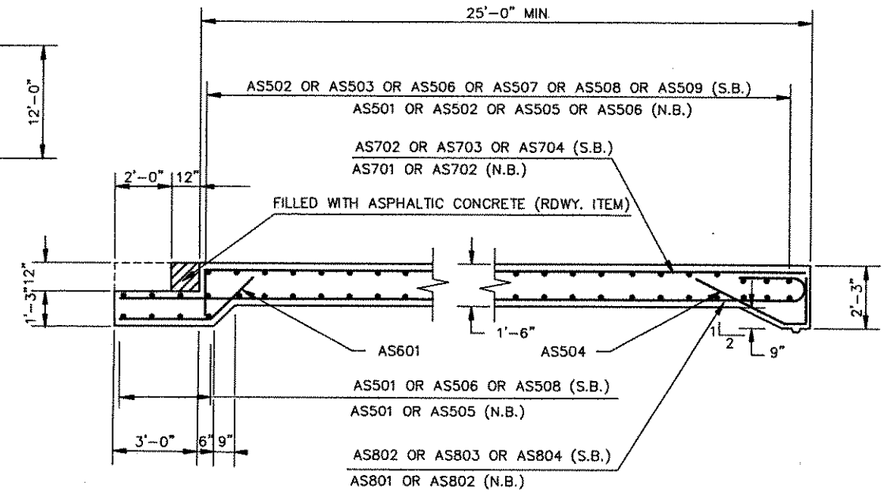

TYPICAL SECTION
SCALE: 3/8"=1'-0"

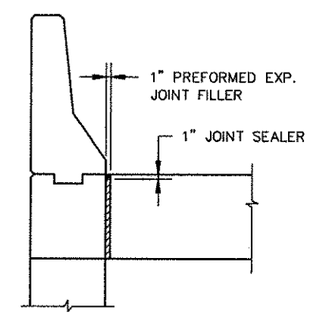

SECTION A-A
SCALE: 3/4" = 1'-0"

NOTES

- FOR ABUTMENT PLANS SEE DWG. NO. 38,39,43 & 44
- FOR GENERAL PLAN SEE DWG. NO. 33
- FOR GENERAL NOTES SEE DWG. NO. 35
- FOR BAR LIST SEE DWG. NO. 80
- FOR LOCATION OF INLET SEE ROADWAY PLANS.
- FIELD CUT REINF. BARS AS REQUIRED TO CLEAR INLET.

REINFORCEMENT BAR SCHEDULE

DWG. NO.	CONTRACT	COUNTY	FEDERAL AID PROJECT No.	SHEET No	TOTAL SHEETS
80	83-101-02	NEW CASTLE	F-1045 (26)	365	492

ROUTE 7 OVER
EAGLE RUN
3 SPAN CONT. COMP. P/S CONC. BOX BM. BRIDGE
APPROACH SLAB BAR LIST

APPROACH SLAB AT ABUTMENT 1 & ABUTMENT 2 S.B.

SIZE	LENGTH	NO.	TYPE	A	B	C	D	E	F	G	H	J	K	R	REMARKS
5	7'-9"	8	STR												
5	8'-3" TO 14'-0"	52	STR												2, VARY EACH BY 2 3/4"
5	7'-0" TO 13'-0"	8	STR												1, VARY EACH BY 10 1/4"
5	5'-11"	112	(5)	1'-10"	0'-9"	3'-4"							3'-0"		
5	3'-6"	112	STR												
5	23'-6"	116	STR												
5	2'-0" TO 22'-0"	36	STR												4, VARY EACH BY 2'-6"
5	17'-6"	116	STR												
5	2'-0" TO 17'-6"	28	STR												4, VARY EACH BY 2'-6"
5	2'-0" TO 10'-0"	8	STR												2, VARY EACH BY 2'-8"
5	11'-6"	60	STR												
6	5'-11"	218	(19)	2'-7"	3'-4"						1'-10"				
7	5'-0" TO 11'-0"	3	STR												1, VARY BY 3'-0"
7	26'-7" TO 30'-10"	24	(20)	1'-10"	24'-9" TO 29'-0"										2, VARY B BY 4 5/8"
7	26'-7" TO 35'-10"	50	(20)	1'-10"	24'-9" TO 34'-0"										2, VARY B BY 4 5/8"
7	26'-7" TO 33'-7"	38	(20)	1'-10"	24'-9" TO 31'-9"										2, VARY B BY 4 5/8"
8	5'-0" TO 11'-0"	3	STR												1, VARY BY 3'-0"
8	29'-6" TO 33'-6"	46	(21)	1'-6"	28'-0" TO 32'-0"						1'-1"				2, VARY B BY 2 1/8"
8	29'-6" TO 38'-9"	98	(21)	1'-6"	28'-0" TO 37'-3"						1'-1"				2, VARY B BY 2 3/8"
8	29'-6" TO 36'-3"	74	(21)	1'-6"	28'-0" TO 34'-9"						1'-1"				2, VARY B BY 2 1/4"

APPROACH SLAB AT ABUTMENT 1 & ABUTMENT 2 N.B.

MARK	SIZE	LENGTH	NO.	TYPE	A	B	C	D	E	F	G	H	J	K	R	REMARKS
AS501	5	29'-6"	120	STR												
AS502	5	2'-0" TO 28'-9"	48	STR												4, VARY EACH BY 2'-5"
AS503	5	3'-6"	112	STR												
AS504	5	5'-11"	88	(5)	1'-10"	0'-9"	3'-4"							3'-0"		
AS505	5	11'-6"	60	STR												
AS506	5	2'-0" TO 10'-0"	16	STR												4, VARY EACH BY 2'-8"
AS507	5	13'-6"	8	STR												
AS508	5	11'-6" TO 13'-6"	52	STR												2, VARY EACH BY 1"
AS601	6	5'-11"	172	(19)	2'-7"	3'-4"						1'-10"				
AS701	7	26'-7" TO 38'-4"	62	(20)	1'-10"	24'-9" TO 36'-6"										2, VARY B BY 4 3/4"
AS702	7	26'-7" TO 31'-7"	26	(20)	1'-10"	24'-9" TO 29'-3"										2, VARY B BY 5"
AS801	8	29'-6" TO 41'-3"	122	(21)	1'-6"	28'-0" TO 39'-9"						1'-1"				2, VARY B BY 2 3/8"
AS802	8	29'-6" TO 34'-0"	50	(21)	1'-6"	28'-0" TO 32'-6"						1'-1"				2, VARY B BY 2 1/4"

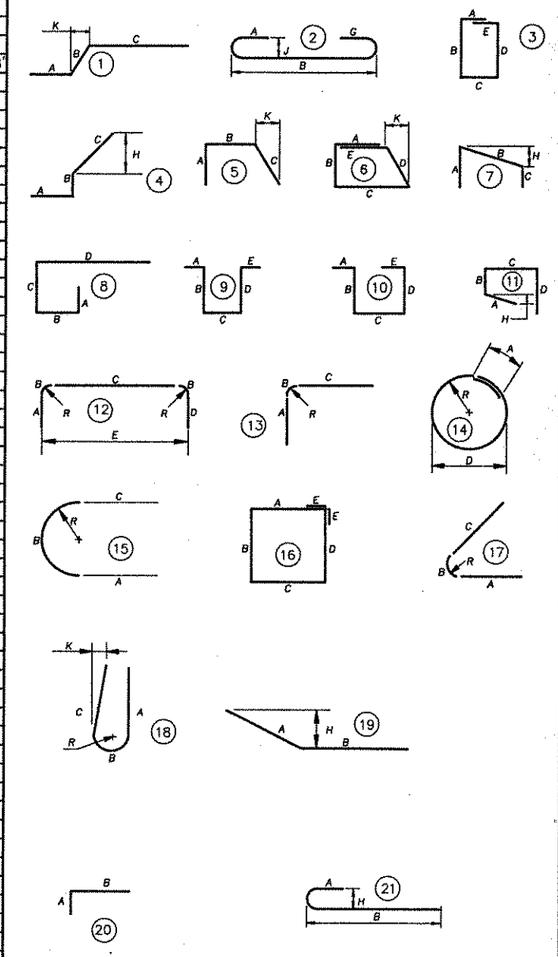

- *All bars in Approach slab are epoxy coated.*
- *All dimensions are out to out of bar except "A" and "G" on standard 135° and 180° hooks, and "R" which is shown to the inside of the bar.*
- *Figures in circles show types.*