CAPITAL TRANSPORTATION PROJECT COST ESTIMATE

(Current Dollars) Part V of V

Contract No. _____ Project Title: I-95 / SR1 Mall Interchange Improvements

SUMMARY

PART I - LOCATION AND ENVIRONMENTAL STUDIES (Part I to be included only for class "I" and "III" projects)	$0
PART II - PRELIMINARY ENGINEERING	$0
PART III - REAL ESTATE	$0
PART IV - CONSTRUCTION	$174,358,275
TOTAL ESTIMATED PROJECT COSTS (also total for Construction Project Estimate from line 7c)	$174,358,275

Darren O'Neill Date: _____
Project Manager

REVIEWED & CONCURRED IN:

_____ Date: _____
Section Head

NOTE: Concurring section heads are to forward the original estimate copy to the Director of Transportation Solutions with one estimate copy each to the Assistant Director of Project Development, Assistant Director of Design Support, and the Cost Estimate Engineer.

CAPITAL TRANSPORTATION PROJECT COST ESTIMATE

(Current Dollars)

Contract No. _____ Project Title I-95 / SR1 Mall Interchange Improvements

PART IV -CONSTRUCTION

A. ROADWAY/APPROACH CONSTRUCTION	$40,690,000	**B. STRUCTURE CONSTRUCTION**	$54,285,000
1. Grading			
a. Excavation (includes SWM pond)	$3,525,000	1. New Bridge	$40,325,000
b. Borrow	$4,050,000	a. Type	
2. Drainage	$3,625,000	b. Size	
3. Pavement		c. $/s.f.	
a. Surface	$2,400,000	2. Old Structure Rem.	$800,000
b. Base	$11,950,000	a. Type	
c. Subbase	$2,275,000	b. Size	
4. Erosion/Sed. Cont.	$625,000	c. $/c.y.	
5. Miscellaneous			
a. Curb/Gutter	$120,000	3. Retaining Wall	$13,160,000
b. Sidewalk		a. Type	
c. Guardrail	$200,000	b. Size	
d. C.P.M. Schedule	$50,000	c. $/c.y.	
e. Clear/Grubb	$750,000	4. Box Culvert	
f. Field Office	$250,000	a. Type	
Other (specify)			
g. PCC Barrier	$10,650,000	b. Size	
h. Milling	$220,000	c. $/s.f.	
i.		**C. LANDSCAPING**	$1,165,000
j.		1. Beautification	$1,165,000
k.		2. Noise Mitigation	
l.		3. Visual Mitigation	
m.		4. Tree Mitigation	
		D. MAINTENANCE OF TRAFFIC	$10,000,000

(refer to Capital Improvement Project form, Part IV - Continued)

CAPITAL TRANSPORTATION PROJECT COST ESTIMATE

(Current Dollars)

Contract No. _____ Project Title I-95 / SR1 Mall Interchange Improvements

PART IV -CONSTRUCTION (CONTINUED)

E. PROJECT TRAFFIC ITEMS	$3,520,000
1. Signing Structures	
a. Overhead Bridges	$1,460,000
b. Cantilever Supports	$115,000
2. Roadway Lighting	$1,310,000
3. Pavement Markings	$60,000
Other (specify)	
4. Signals, ITS	$575,000
F. WETLAND MITIGATION	
G. UTILITY RELOC. IN CONTRACT	$2,250,000
1. Water	
2. Sanitary Sewer	
Other (specify)	
3. LUMP SUM	$2,250,000
H. SUBTOTAL (A thru G) ROUNDED	$111,910,000
I. MISC. ITEMS	$16,786,500
(15% of H for large projects and 20% for small)	
(At SF submission use 10% and 5%)	
15% (% used)	
J. CONTRACTOR'S CONST. ENG.	$5,595,500
(normally 5% of H) 5% (% used)	
K. INITIAL EXPENSE	$5,595,500
(normally 5% of H) 5% (% used)	
L. CONSTRUCTION CONTINGENCY	$11,191,000
(normally 10% of H) 10% (% used)	

P. REIMBURSABLE UTILITY RELOCATIONS BY OTHERS	$0
(Enter on PNR funding line 7)	
1. Water	
2. Sanitary Sewer	
3. Electric	
4. Telephone	
5. Gas	
6. CATV	
Other (specify)	
7.	
8. Cost included in Section G	
Utilities Estimator: Date:	

Q. TRAFFIC SECTION ITEMS	$618,000
(Enter on PNR funding line 6)	
1. Signing	$10,000
2. Signals	$200,000
3. Detour Signing	
4. DelTrac	$408,000
Other (specify)	
5.	
Traffic Estimator: Date:	

M. TOTAL CONSTRUCTION COSTS (H thru L) (Enter on PNR funding line 5)		$151,078,500
N. CONSTRUCTION ENGINEERING (normally 15% of construction costs) (Enter on PNR funding line 4)	15% (% used)	$22,661,775
O. TOTAL CONSTRUCTION COSTS (Construction Costs + Construction Engineering) (use this total + Q + P for Construction Project Estimate from line 7d)		$173,740,275

Estimator: RKK/rls Date: 13-May-09

CONTRACT NO. 28-090-03

SR1 / I-95 INTERCHANGE IMPROVEMENTS

PRELIMINARY QUANTITY BACK-UP

MAY, 2009

EARTHWORK QUANTITIES

May, 2009

SUMMARY OF EARTHWORK (Preliminary)
I-95 / SR1 INTERCHANGE

ROAD	FILL (CY)	CUT (CY)	TOTAL
NB I-95 - Sta. 1699+08 to Sta. 1730+11	3,471	6,706	
SB I-95 - Sta. 80+95 to Sta. 96+09	0	426	
NB Rte 7 - Sta. 633+00 to Sta. 647+00	0	10,936	
SB Rte 7 - Sta. 1602+50 to Sta. 1641+00	449	12,621	
Ramp A - All : Sta. 1234+50 to Sta. 1286+07	355,655	81,620	
Ramp A - Sta. 1209+00 to Sta. 1227+80	14,898	7,709	
Ramp B - Sta. 1214+00 to Sta. 1226+66	20,528	94	
Ramp B1 - Sta. 511+00 to Sta. 563+00	12,412	59,019	
Ramp C - Sta. 1101+33 to Sta 1123+53	23,754	786	
Ramp C1 - Sta. 1809+55 to 1818+10	8,085	236	
Ramp R - Sta.			
Ramp E - Sta. 921+50 to Sta. 936+40	7,503	1,381	
Ramp E1 - Sta. 1010+45 to Sta. 1012+44	639	1,175	
Ramp G1 - Sta. 1317+38 to Sta. 1340+84	30,473	18,374	
Ramp G2 - Sta. 1410+00 to Sta. 1414+40	232	343	
Ramp R - Sta.1511+68 to Sta. 1524+91	1,678	2,682	
Ramp R1 - Sta. 103+50 to Sta. 106+00	2,623	1,356	
Ramp S - Sta. 212+70 to Sta. 218+61	951	317	
Ramp U - Sta. 760+00 to Sta. 740+50	12,029	6,233	
Ramp U1 - Sta. 832+00 to Sta. 836+65	0	5,250	
SW Loop - Sta. 1900+00 to Sta. 1910+10	192	1,195	
Stanton Christiana Road	865	226	
Stockpile - Area #1			
Stockpile - Area #2			
TOTAL	**496,437**	**218,685**	

SUMMARY OF EARTHWORK ITEMS				
Excavation				
Excavation (from cross sections)		218,685		
Unsuitable Material	10%	-21,869		
Sub-total		**196,817**		
Shrinkage and Loss due to Handling	15%	-29,522		
Total Cut Available for Emabankment		**167,294**		
Embankment				
Embankment Required (from cross sections)		496,437		
Embankment for MSE Walls		-87,000		
Embankment placed under Glenville Contract		-50,800		
Embankment available from excavation		-167,294		
Refill for Concrete Removal		1,500		
Sub-total		192,843		
Densification (Swell Factor)	15%	28,926		
Total Borrow Required		**221,769**		
PROPOSED CLASS 1 EXCAVATION	**CY**	**218,685**	**Say:**	**220,000**
PROPOSED BORROW EXCAVATION	**CY**	**221,769**	**Say:**	**225,000**

EARTHWORK CALCULATIONS

Project : *I-95 / SR1 Interchange*
Desc. : ***Preliminary - Norhthbound I-95***
Sta. 1699+08 to Sta. 1730+11

Date: *4/24/2009*
By: *EGD*

Comm.# *103-059*

FILL				
Station	Area	Average	Dist.	Cu. Ft.
1699+08	*0*	1	92	92
1700+00	*2*	3	100	300
1701+00	*4*	3.5	50	175
1701+50	*3*	4.5	100	450
1702+50	*6*	7.5	50	375
1703+00	*9*	16.5	50	825
1703+50	*24*	30.5	150	4,575
1705+00	*37*	50.5	100	5,050
1706+00	*64*	109.5	50	5,475
1706+50	*155*	151.5	100	15,150
1707+50	*148*	130.5	100	13,050
1708+50	*113*	109	100	10,900
1709+50	*105*	105	0	0
1709+50	*105*	111	150	16,650
1711+00	*117*	127	104	13,208
1712+04	*137*	81	0	0
1712+04	*25*	24	46	1,104
1712+50	*23*	28.5	100	2,850
1713+50	*34*	23.5	100	2,350
1714+50	*13*	6.5	100	650
1715+50	*0*	0	0	0
1715+50	*0*	0	250	0
1718+00	*0*	0	200	0
1720+00	*0*	1	200	200
1722+00	*2*	1.5	150	225
1723+50	*1*	0.5	100	50
1724+50	*0*	0	150	0
1726+00	*0*	0	250	0
1728+50	*0*	0	50	0
1729+00	*0*	0	111	0
1730+11	*0*			0

CUT				
Station	Area	Average	Dist.	Cu. Ft.
1699+08	*20*	29.5	92	2,714
1700+00	*39*	36.5	100	3,650
1701+00	*34*	38	50	1,900
1701+50	*42*	34	100	3,400
1702+50	*26*	23.5	50	1,175
1703+00	*21*	20	50	1,000
1703+50	*19*	18.5	150	2,775
1705+00	*18*	67	100	6,700
1706+00	*116*	84	50	4,200
1706+50	*52*	69	100	6,900
1707+50	*86*	130.5	100	13,050
1708+50	*175*	153	100	15,300
1709+50	*131*	127.5	0	0
1709+50	*124*	88	150	13,200
1711+00	*52*	39	104	4,056
1712+04	*26*	24	0	0
1712+04	*22*	26.5	46	1,219
1712+50	*31*	27	100	2,700
1713+50	*23*	45.5	100	4,550
1714+50	*68*	102.5	100	10,250
1715+50	*137*	132.5	0	0
1715+50	*128*	126.5	250	31,625
1718+00	*125*	98	200	19,600
1720+00	*71*	55	200	11,000
1722+00	*39*	39	150	5,850
1723+50	*39*	39	100	3,900
1724+50	*39*	30	150	4,500
1726+00	*21*	14.5	250	3,625
1728+50	*8*	11	50	550
1729+00	*14*	15	111	1,665
1730+11	*16*			0

TOTAL Cu.Ft. of FILL =	93,704
TOTAL Cu.Yd. =	**3,471**

TOTAL Cu.Ft. of CUT =	181,054
TOTAL Cu.Yd. =	**6,706**

EARTHWORK CALCULATIONS

Project : *I-95 / SR1 Interchange*
Desc. : ***Preliminary - Southbound I-95***
Sta. 80+95 to Sta. 91+90 Left
Sta. 84+05 to Sta. 96+09 Right

Date: *4/24/2009*
By: *EGD*
Comm.# *103-059*

FILL

Station	Area	Average	Dist.	Cu. Ft.
+	*0*	0	0	0
+	*0*	0	0	0
+	*0*	0	0	0
+	*0*	0	0	0
+	*0*	0	0	0
+	*0*	0	0	0
+	*0*	0	0	0
+	*0*	0	0	0
+	*0*	0	0	0
+	*0*	0	0	0
+	*0*	0	0	0
+	*0*	0	0	0
+	*0*	0	0	0
+	*0*	0	0	0
+	*0*	0	0	0
+	*0*	0	0	0
+	*0*	0	0	0
+	*0*	0	0	0
+	*0*	0	0	0
+	*0*	0	0	0
+	*0*	0	0	0
+	*0*	0	0	0
+	*0*	0	0	0
+	*0*	0	0	0
+	*0*	0	0	0
+	*0*	0	0	0
+	*0*	0	0	0
+	*0*	0	0	0
+	*0*	0	0	0
+	*0*	0	0	0
+	*0*	0	0	0
+	*0*	0	0	0
+	*0*	0	0	0
+	*0*	0	0	0
+	*0*	0	0	0
+	*0*	0	0	0
+	*0*	0	0	0
+	*0*	0	0	0
+	*0*	0	0	0
+	*0*	0	0	0
+	*0*	0	0	0
+	*0*	0	0	0
+	*0*	0	0	0
+	*0*	0	0	0
+	*0*	0	0	0
+	*0*	0	0	0
+	*0*	0	0	0
+	*0*	0	0	0
+	*0*	0	0	0
+	*0*	0	0	0
+	*0*	0	0	0
+	*0*	0	0	0
+	*0*			

TOTAL Cu.Ft. of FILL = 0

TOTAL Cu.Yd. = **0**

CUT

Station	Area	Average	Dist.	Cu. Ft.
80+95	*5*	5	1,095	5,475
91+90	*5*	2.5	0	0
91+90	*0*			0
84+05	*5*	5	1,204	6,020
96+09	*5*	2.5	0	0
96+09	*0*			0
+	*0*	0	0	0
+	*0*	0	0	0
+	*0*	0	0	0
+	*0*	0	0	0
+	*0*	0	0	0
+	*0*	0	0	0
+	*0*	0	0	0
+	*0*	0	0	0
+	*0*	0	0	0
+	*0*	0	0	0
+	*0*	0	0	0
+	*0*	0	0	0
+	*0*	0	0	0
+	*0*	0	0	0
+	*0*	0	0	0
+	*0*	0	0	0
+	*0*	0	0	0
+	*0*	0	0	0
+	*0*	0	0	0
+	*0*	0	0	0
+	*0*	0	0	0
+	*0*	0	0	0
+	*0*	0	0	0
+	*0*	0	0	0
+	*0*	0	0	0
+	*0*	0	0	0
+	*0*	0	0	0
+	*0*	0	0	0
+	*0*	0	0	0
+	*0*	0	0	0
+	*0*	0	0	0
+	*0*	0	0	0
+	*0*	0	0	0
+	*0*			

TOTAL Cu.Ft. of CUT = 11,495

TOTAL Cu.Yd. = **426**

EARTHWORK CALCULATIONS

Project : *I-95 / SR1 Interchange*
Desc. : ***Preliminary - Northbound Rte 7***
Sta. 633+00 to Sta. 647+00

Date: *4/27/2009*
By: *EGD*

Comm.# *103-059*

FILL				
Station	Area	Average	Dist.	Cu. Ft.
633+00	*0*	0	200	0
635+00	*0*	0	100	0
636+00	*0*	0	200	0
638+00	*0*	0	200	0
640+00	*0*	0	50	0
640+50	*0*	0	150	0
642+00	*0*	0	274	0
644+74	*0*	0	0	0
644+74	*0*	0	226	0
647+00	*0*			0

CUT				
Station	Area	Average	Dist.	Cu. Ft.
633+00	*494*	330	200	66,000
635+00	*166*	234	100	23,400
636+00	*302*	293	200	58,600
638+00	*284*	268	200	53,600
640+00	*252*	244	50	12,200
640+50	*236*	214.5	150	32,175
642+00	*193*	127.5	274	34,935
644+74	*62*	65.5	0	0
644+74	*69*	63.5	226	14,351
647+00	*58*			0

TOTAL Cu.Ft. of FILL =	0
TOTAL Cu.Yd. =	**0**

TOTAL Cu.Ft. of CUT =	295,261
TOTAL Cu.Yd. =	**10,936**

EARTHWORK CALCULATIONS

Project : *I-95 / SR1 Interchange*
Desc. : ***Preliminary -Southbound Rte 7***
Sta. 1602+50 to Sta. 1641+00

Date: *4/29/2009*
By: *EGD*

Comm.# *103-059*

FILL				
Station	Area	Average	Dist.	Cu. Ft.
SB7, Sta. 1602+50 to 1613+20, Lt Shoulder				
	0	0	depth	0
SB7, Sta. 1604+96 to 1607+00, SW Loop - Gore Area				
	0	0	depth	0
SB7, Sta. 1611+10 to 1614+15, Ramp C1 - Gore Area				
	0	0	depth	0
SB7 Areas using Ramp A Stationing				
1253+22	*0*	0	28	0
1253+50	*0*	0	50	0
1254+00	*0*	0	100	0
1255+00	*0*	0	100	0
1256+00	*0*	0	25	0
1256+25	*0*			
1256+25	*0*			0
1257+50	*5*	4	50	200
1258+00	*3*	5	50	250
1258+50	*7*	4	50	200
1259+00	*1*	0.5	50	25
1259+50	*0*	0	50	0
1260+00	*0*	0	50	0
1260+50	*0*	0	50	0
1261+00	*0*	0	50	0
1261+50	*0*	0	50	0
1262+00	*0*	0	150	0
1263+50	*0*	0	100	0
1264+50	*0*	0	50	0
1265+00	*0*	0	150	0
1266+50	*0*	0	0	0
1266+50	*0*	0	100	0
1267+50	*0*	0	150	0
1269+00	*0*	9.5	0	0
1269+00	*19*	16	50	800
1269+50	*13*	15	200	3,000
1271+50	*17*	16.5	100	1,650
1272+50	*16*	14.5	150	2,175
1274+00	*13*	14	80	1,120
1274+80	*15*	14	55	770
1275+35	*13*	10.5	53	557
1275+88	*8*	8	0	0
1275+88	*8*	9.5	145	1,378
1277+33	*11*	5.5	0	0
1277+33	*0*	0	117	0
1278+50	*0*	0	137	0
1279+87	*0*			

CUT				
Station	Area	Average	Dist.	Cu. Ft.
SB7, Sta. 1602+50 to 1613+20, Lt Shoulder				
	7700	1.5	depth	11,550
SB7, Sta. 1604+96 to 1607+00, SW Loop - Gore Area				
	1660	1.5	depth	2,490
SB7, Sta. 1611+10 to 1614+15, Ramp C1 - Gore Area				
	2100	1.5	depth	3,150
SB7 Areas using Ramp A Stationing				
1253+22	*15*	15	28	420
1253+50	*15*	12.5	50	625
1254+00	*10*	10	100	1,000
1255+00	*10*	13.5	100	1,350
1256+00	*17*	17	25	425
1256+25	*17*			
1256+25	*0*			0
1257+50	*0*	0	50	0
1258+00	*0*	0	50	0
1258+50	*0*	23.5	50	1,175
1259+00	*47*	693	50	34,650
1259+50	*1339*	1442	50	72,100
1260+00	*1545*	1320	50	66,000
1260+50	*1095*	906.5	50	45,325
1261+00	*718*	571.5	50	28,575
1261+50	*425*	239.5	50	11,975
1262+00	*54*	50	150	7,500
1263+50	*46*	42.5	100	4,250
1264+50	*39*	27	50	1,350
1265+00	*15*	26.5	150	3,975
1266+50	*38*	23.5	0	0
1266+50	*9*	9	100	900
1267+50	*9*	9	150	1,350
1269+00	*9*	20	0	0
1269+00	*31*	35.5	50	1,775
1269+50	*40*	36	200	7,200
1271+50	*32*	32.5	100	3,250
1272+50	*33*	33	150	4,950
1274+00	*33*	32.5	80	2,600
1274+80	*32*	26.5	55	1,458
1275+35	*21*	26	53	1,378
1275+88	*31*	57	0	0
1275+88	*83*	79	145	11,455
1277+33	*75*	51	0	0
1277+33	*27*	28.5	117	3,335
1278+50	*30*	23.5	137	3,220
1279+87	*17*			

TOTAL Cu.Ft. of FILL =	12,124
TOTAL Cu.Yd. =	**449**

TOTAL Cu.Ft. of CUT =	340,755
TOTAL Cu.Yd. =	**12,621**

EARTHWORK CALCULATIONS

Project : *I-95 / SR1 Interchange*
Desc. : ***Preliminary -Ramp A, Mainline Combined***
Sta. 1234+50 to Sta. 1286+07

Date: *3/24/2009*
By: *EGD*
Comm.# *103-059*

FILL				
Station	Area	Average	Dist.	Cu. Ft.
1234+50	2834	3547.5	50	177,375
1235+00	4261	4169.5	90	375,255
1235+90	4078		0	0
1235+90	6066	7346	210	1,542,660
1238+00	8626	8293	200	1,658,600
1240+00	7960	8096.5	200	1,619,300
1242+00	8233	6483	150	972,450
1243+50	4733	4764.5	150	714,675
1245+00	4796		0	0
1245+00	4651	4850	50	242,500
1245+50	5049		0	0
1245+50	3697	3749	31	116,219
1245+81	3801		0	0
1245+81	2190	2352.5	119	279,948
1247+00	2515	1996.5	100	199,650
1248+00	1478	1365	12	16,380
1248+12	1252		0	0
1248+12	0	0	138	0
1249+50	0	0	50	0
1250+00	0	0	62	0
1250+62	0		0	0
1250+62	1098	1070.5	138	147,729
1252+00	1043		0	0
1252+00	2370	2217	200	443,400
1254+00	2064	1631	250	407,750
1256+50	1198	1060	100	106,000
1257+50	922	757	150	113,550
1259+00	592	317.5	250	79,375
1261+50	43	37	150	5,550
1263+00	31	89	200	17,800
1265+00	147	212	250	53,000
1267+50	277	278	215	59,770
1269+65	279		0	0
1269+65	279	243.5	185	45,048
1271+50	208	228.5	100	22,850
1272+50	249	238.5	50	11,925
1273+00	228	225.5	100	22,550
1274+00	223	199.5	150	29,925
1275+50	176	159.5	94	14,993
1276+44	143		0	0
1276+44	143	155.5	222	34,521
1278+66	168		0	0
1278+66	158	162	121	19,602
1279+87	166		0	0
1279+87	169	182.5	63	11,498
1280+50	196	170	50	8,500
1281+00	144	115	150	17,250
1282+50	86	57	150	8,550
1284+00	28	35.5	150	5,325
1285+50	43	21.5	57	1,226
1286+07	0	0	0	0
1286+07	0			0

CUT				
Station	Area	Average	Dist.	Cu. Ft.
1234+50	0	0	50	0
1235+00	0	0	90	0
1235+90	0	0	0	0
1235+90	0	0	210	0
1238+00	0	0	200	0
1240+00	0	0	200	0
1242+00	0	1.5	150	225
1243+50	3	16.5	150	2,475
1245+00	30		0	0
1245+00	30	15	50	750
1245+50	0		0	0
1245+50	0	11	31	341
1245+81	22		0	0
1245+81	22	71.5	119	8,509
1247+00	121	297	100	29,700
1248+00	473	473	12	5,676
1248+12	473		0	0
1248+12	473	618	138	85,284
1249+50	763	898.5	50	44,925
1250+00	1034	1070	62	66,340
1250+62	1106		0	0
1250+62	1106	1053	138	145,314
1252+00	1000		0	0
1252+00	1509	1420	200	284,000
1254+00	1331	1347	250	336,750
1256+50	1363	1383	100	138,300
1257+50	1403	1316	150	197,400
1259+00	1229	1013.5	250	253,375
1261+50	798	792.5	150	118,875
1263+00	787	571.5	200	114,300
1265+00	356	434.5	250	108,625
1267+50	513	623	215	133,945
1269+65	733		0	0
1269+65	81	120.5	185	22,293
1271+50	160	139.5	100	13,950
1272+50	119	83	50	4,150
1273+00	47	49	100	4,900
1274+00	51	67	150	10,050
1275+50	83	107	94	10,058
1276+44	131		0	0
1276+44	56	48	222	10,656
1278+66	40		0	0
1278+66	40	41.5	121	5,022
1279+87	43		0	0
1279+87	47	46.5	63	2,930
1280+50	46	53.5	50	2,675
1281+00	61	60.5	150	9,075
1282+50	60	79	150	11,850
1284+00	98	100	150	15,000
1285+50	102	105.5	57	6,014
1286+07	109	54.5	0	0
1286+07	0			0

TOTAL Cu.Ft. of FILL =	9,602,697
TOTAL Cu.Yd. =	**355,655**

TOTAL Cu.Ft. of CUT =	2,203,730
TOTAL Cu.Yd. =	**81,620**

EARTHWORK CALCULATIONS

Project : *I-95 / SR1 Interchange*
Desc. : ***Preliminary -Ramp A***
Sta. 1209+00 to Sta. 1227+80

Date: *3/18/2009*
By: *EGD*

Comm.# *103-059*

FILL				
Station	Area	Average	Dist.	Cu. Ft.
1209+00	*0*	0	100	0
1210+00	*0*	0	150	0
1211+50	*0*	0	150	0
1213+00	*0*	0	150	0
1214+50	*0*	0	200	0
1216+50	*0*	0	50	0
1217+00	*0*	1.5	50	75
1217+50	*3*	2	56	112
1218+06	*1*	0	0	0
1218+06	*11*	14.5	44	638
1218+50	*18*	26.5	100	2,650
1219+50	*35*	28.5	100	2,850
1220+50	*22*	12	100	1,200
1221+50	*2*	13.5	150	2,025
1223+00	*25*	71.5	50	3,575
1223+50	*118*	163.5	50	8,175
1224+00	*209*	659.5	200	131,900
1226+00	*1110*	1344.5	150	201,675
1227+50	*1579*	1579	30	47,370
1227+80	*1579*			0

CUT				
Station	Area	Average	Dist.	Cu. Ft.
1209+00	*0*	0	100	0
1210+00	*0*	0	150	0
1211+50	*0*	0	150	0
1213+00	*0*	45.5	150	6,825
1214+50	*91*	145	200	29,000
1216+50	*199*	223.5	100	22,350
1217+50	*248*	249.5	56	13,972
1218+06	*251*	0	0	0
1218+06	*251*	268	44	11,792
1218+50	*285*	262.5	100	26,250
1219+50	*240*	236.5	100	23,650
1220+50	*233*	334.5	100	33,450
1221+50	*436*	255.5	150	38,325
1223+00	*75*	44	50	2,200
1223+50	*13*	6.5	50	325
1224+00	*0*	0	200	0
1226+00	*0*	0	150	0
1227+50	*0*	0	30	0
1227+80	*0*			0

TOTAL Cu.Ft. of FILL =	402,245
TOTAL Cu.Yd. =	**14,898**

TOTAL Cu.Ft. of CUT =	208,139
TOTAL Cu.Yd. =	**7,709**

EARTHWORK CALCULATIONS

Project : *I-95 / SR1 Interchange*
Desc. : ***Preliminary -Ramp B***
Sta. 1214+00 to Sta. 1226+66

Date: *3/18/2009*
By: *EGD*

Comm.# *103-059*

FILL				
Station	Area	Average	Dist.	Cu. Ft.
1214+00	*0*	4	50	200
1214+50	*8*	29.5	100	2,950
1215+50	*51*	145	200	29,000
1217+50	*239*	243.5	50	12,175
1218+00	*248*	335.5	200	67,100
1220+00	*423*	490.5	200	98,100
1222+00	*558*	616.5	150	92,475
1223+50	*675*	714	100	71,400
1224+50	*753*	831.5	200	166,300
1226+50	*910*	910	16	14,560
1226+66	*910*			0

CUT				
Station	Area	Average	Dist.	Cu. Ft.
1214+00	*48*	37.5	50	1,875
1214+50	*27*	13.5	50	675
1215+00	*0*	0	50	0
1215+50	*0*	0	50	0
1216+00	*0*	0	50	0
1216+50	*0*	0	50	0
1217+00	*0*	0	50	0
1217+50	*0*	0	50	0
1218+00	*0*	0	50	0
1218+50	*0*	0	50	0
1219+00	*0*			0

TOTAL Cu.Ft. of FILL =	554,260
TOTAL Cu.Yd. =	**20,528**

TOTAL Cu.Ft. of CUT =	2,550
TOTAL Cu.Yd. =	**94**

EARTHWORK CALCULATIONS

Project : *I-95 / SR1 Interchange*
Desc. : ***Preliminary -Ramp B1***
Sta. 511+00 to Sta. 563+00

Date: *3/25/2009*
By: *EGD*

Comm.# *103-059*

FILL				
Station	Area	Average	Dist.	Cu. Ft.
511+00	*1019*	953.5	100	95,350
512+00	*888*	616	200	123,200
514+00	*344*	270	200	54,000
516+00	*196*	298	0	0
516+00	*400*	370	100	37,000
517+00	*340*	273	50	13,650
517+50	*206*	106	50	5,300
518+00	*6*	10.5	100	1,050
519+00	*15*	7.5	150	1,125
520+50	*0*	0	200	0
522+50	*0*	0	200	0
524+50	*0*	0	150	0
526+00	*0*	0	150	0
527+50	*0*	0	50	0
528+00	*0*	0	150	0
529+50	*0*	0	150	0
531+00	*0*	0	200	0
533+00	*0*	0	200	0
535+00	*0*	0	150	0
536+50	*0*	0	200	0
538+50	*0*	0	100	0
539+50	*0*	0	50	0
540+00	*0*	0	150	0
541+50	*0*	0	50	0
542+00	*0*	0	150	0
543+50	*0*	0	250	0
546+00	*0*	0	200	0
548+00	*0*	0	100	0
549+00	*0*	0	150	0
550+50	*0*	0	50	0
551+00	*0*	0	100	0
552+00	*0*	0	50	0
552+50	*0*	0	50	0
553+00	*0*	0	50	0
553+50	*0*	0	300	0
556+50	*0*	0	200	0
558+50	*0*	0	50	0
559+00	*0*	0	200	0
561+00	*0*	1	50	50
561+50	*2*	5.5	50	275
562+00	*9*	29.5	50	1,475
562+50	*50*	53	50	2,650
563+00	*56*			

CUT				
Station	Area	Average	Dist.	Cu. Ft.
511+00	*18*	28	100	2,800
512+00	*38*	53	200	10,600
514+00	*68*	62	200	12,400
516+00	*56*	56	0	0
516+00	*56*	44	100	4,400
517+00	*32*	16	50	800
517+50	*0*	8.5	50	425
518+00	*17*	63.5	100	6,350
519+00	*110*	225.5	150	33,825
520+50	*341*	451.5	200	90,300
522+50	*562*	518.5	200	103,700
524+50	*475*	331	150	49,650
526+00	*187*	166.5	150	24,975
527+50	*146*	167	50	8,350
528+00	*188*	299	150	44,850
529+50	*410*	678	150	101,700
531+00	*946*	1003	200	200,600
533+00	*1060*	774	200	154,800
535+00	*488*	468.5	150	70,275
536+50	*449*	658.5	200	131,700
538+50	*868*	782	100	78,200
539+50	*696*	584	50	29,200
540+00	*472*	491	150	73,650
541+50	*510*	754	50	37,700
542+00	*998*	646.5	150	96,975
543+50	*295*	242.5	250	60,625
546+00	*190*	128	200	25,600
548+00	*66*	79.5	100	7,950
549+00	*93*	91	150	13,650
550+50	*89*	106.5	50	5,325
551+00	*124*	103.5	100	10,350
552+00	*83*	118.5	50	5,925
552+50	*154*	132.5	50	6,625
553+00	*111*	98.5	50	4,925
553+50	*86*	106.5	300	31,950
556+50	*127*	107	200	21,400
558+50	*87*	97.5	50	4,875
559+00	*108*	92.5	200	18,500
561+00	*77*	67.5	50	3,375
561+50	*58*	54.5	50	2,725
562+00	*51*	27.5	50	1,375
562+50	*4*	2	50	100
563+00	*0*			

TOTAL Cu.Ft. of FILL =	335,125
TOTAL Cu.Yd. =	**12,412**

TOTAL Cu.Ft. of CUT =	1,593,500
TOTAL Cu.Yd. =	**59,019**

EARTHWORK CALCULATIONS

Project : *I-95 / SR1 Interchange*
Desc. : ***Preliminary -Ramp C***
Sta. 1101+33 to Sta. 1123+53

Date: *3/26/2009*
By: *ZJS/EGD*

Comm.# *103-059*

FILL				
Station	Area	Average	Dist.	Cu. Ft.
1101+33	*0*	0	17	0
1101+50	*0*	0	50	0
1102+00	*0*	0	50	0
1102+50	*0*	2	100	200
1103+50	*4*	8.5	50	425
1104+00	*13*	23	150	3,450
1105+50	*33*	33.5	50	1,675
1106+00	*34*	34	150	5,100
1107+50	*34*	30.5	100	3,050
1108+50	*27*	39.5	50	1,975
1109+00	*52*	84	55	4,620
1109+55	*116*		0	0
1109+55	*83*	109.5	45	4,928
1110+00	*136*	202	50	10,100
1110+50	*268*	321.5	50	16,075
1111+00	*375*	613.5	100	61,350
1112+00	*852*	1033.5	50	51,675
1112+50	*1215*	1341	50	67,050
1113+00	*1467*	1620	100	162,000
1114+00	*1773*	1333.5	50	66,675
1114+50	*894*	819	16	13,104
1114+66	*744*			0
				0
Bridge				0
				0
1117+24	*603*	708	26	18,408
1117+50	*813*	775	50	38,750
1118+00	*737*	632	50	31,600
1118+50	*527*	421	100	42,100
1119+50	*315*	324.5	50	16,225
1120+00	*334*		0	0
1120+00	*356*	260.5	50	13,025
1120+50	*165*	106	50	5,300
1121+00	*47*	31	63	1,953
1121+63	*15*		0	0
1121+63	*6*	3	37	111
1122+00	*0*	2.5	100	250
1123+00	*5*	3.5	53	186
1123+53	*2*			

CUT				
Station	Area	Average	Dist.	Cu. Ft.
1101+33	*23*	23	17	391
1101+50	*23*	28	50	1,400
1102+00	*33*	30	50	1,500
1102+50	*27*	23	100	2,300
1103+50	*19*	12.5	50	625
1104+00	*6*	7	150	1,050
1105+50	*8*	16	50	800
1106+00	*24*	28	150	4,200
1107+50	*32*	30.5	100	3,050
1108+50	*29*	14.5	50	725
1109+00	*0*	0	55	0
1109+55	*0*		0	0
1109+55	*0*	0	45	0
1110+00	*0*	1.5	50	75
1110+50	*3*	1.5	50	75
1111+00	*0*	0	100	0
1112+00	*0*	0	50	0
1112+50	*0*	0	50	0
1113+00	*0*	0	100	0
1114+00	*0*	0	50	0
1114+50	*0*	0	16	0
1114+66	*0*			0
				0
Bridge				0
				0
1117+24	*0*	0	26	0
1117+50	*0*	0	50	0
1118+00	*0*	0.5	50	25
1118+50	*1*	0.5	100	50
1119+50	*0*	0	50	0
1120+00	*0*		0	0
1120+00	*0*	0	50	0
1120+50	*0*	5.5	50	275
1121+00	*11*	10.5	63	662
1121+63	*10*		0	0
1121+63	*3*	11	37	407
1122+00	*19*	22.5	100	2,250
1123+00	*26*	25.5	53	1,352
1123+53	*25*			

TOTAL Cu.Ft. of FILL =		641,359
TOTAL Cu.Yd.	=	**23,754**

TOTAL Cu.Ft. of CUT =		21,211
TOTAL Cu.Yd.	=	**786**

EARTHWORK CALCULATIONS

Project : *I-95 / SR1 Interchange*
Desc. : ***Preliminary -Ramp C1***
Sta. 1809+55 to Sta. 1818+10

Date: *3/26/2009*
By: *ZJS/EGD*

Comm.# *103-059*

FILL				
Station	Area	Average	Dist.	Cu. Ft.
1809+55	*73*	190.5	95	18,098
1810+50	*308*	405.5	50	20,275
1811+00	*503*	665.5	100	66,550
1812+00	*828*	702.5	100	70,250
1813+00	*577*	445.5	50	22,275
1813+50	*314*	186.5	100	18,650
1814+50	*59*	35.5	50	1,775
1815+00	*12*	7	53	371
1815+53	*2*	2	0	0
1815+53	*2*	1	47	47
1816+00	*0*	0	100	0
1817+00	*0*	0	110	0
1818+10	*0*			0

CUT				
Station	Area	Average	Dist.	Cu. Ft.
1809+55	*0*	0	95	0
1810+50	*0*	0	50	0
1811+00	*0*	0	100	0
1812+00	*0*	0	100	0
1813+00	*0*	0	50	0
1813+50	*0*	0	100	0
1814+50	*0*	5	50	250
1815+00	*10*	18	53	954
1815+53	*26*	24.5	0	0
1815+53	*23*	21.5	47	1,011
1816+00	*20*	20	100	2,000
1817+00	*20*	19.5	110	2,145
1818+10	*19*			0

TOTAL Cu.Ft. of FILL =	218,291
TOTAL Cu.Yd. =	**8,085**

TOTAL Cu.Ft. of CUT =	6,360
TOTAL Cu.Yd. =	**236**

EARTHWORK CALCULATIONS

Project : *I-95 / SR1 Interchange*
Desc. : ***Preliminary -Ramp E and E1***
Ramp E - Sta. 921+50 to Sta. 936+00
Ramp E1 - Sta. 1010+45 to Sta. 1012+44

Date: *4/23/2009*
By: *ZJS/EGD*
Comm.# *103-059*

Ramp E

FILL					CUT				
Station	Area	Average	Dist.	Cu. Ft.	Station	Area	Average	Dist.	Cu. Ft.
921+50	0	0	50	0	921+50	0	5.5	50	275
922+00	0	0	50	0	922+00	11	6.5	50	325
922+50	0	0	50	0	922+50	2	29.5	50	1,475
923+00	0	0	50	0	923+00	57	76	50	3,800
923+50	0	0	50	0	923+50	95	118.5	50	5,925
924+00	0	0	50	0	924+00	142	102.5	50	5,125
924+50	0	0	50	0	924+50	63	39.5	50	1,975
925+00	0	0	50	0	925+00	16	11.5	50	575
925+50	0	0	150	0	925+50	7	7.5	150	1,125
927+00	0	0	150	0	927+00	8	16.5	150	2,475
928+50	0	0	50	0	928+50	25	38	50	1,900
929+00	0	0	150	0	929+00	51	56.5	150	8,475
930+50	0	0	50	0	930+50	62	33	50	1,650
931+00	0	0	50	0	931+00	4	5	50	250
931+50	0	448.5	0	0	931+50	6	6	0	0
931+50	897	758	100	75,800	931+50	6	5.5	100	550
932+50	619	545	100	54,500	932+50	5	4.5	100	450
933+50	471	357	100	35,700	933+50	4	7	100	700
934+50	243	202.5	50	10,125	934+50	10	5	50	250
935+00	162	189	140	26,460	935+00	0	0	140	0
936+40	216				936+40	0			

Ramp E	TOTAL Cu.Ft. of FILL =	202,585	TOTAL Cu.Ft. of CUT =	37,300
	TOTAL Cu.Yd. =	**7,503**	TOTAL Cu.Yd. =	**1,381**

Ramp E1

1010+45	0	0	5	0	1010+45	94	98.5	5	493
1010+50	0	0	50	0	1010+50	103	296	50	14,800
1011+00	0	85	65	5,525	1011+00	489	250	65	16,250
1011+65	170	180	0	0	1011+65	11	11	0	0
1011+65	190	152.5	35	5,338	1011+65	11	5.5	35	193
1012+00	115	145	44	6,380	1012+00	0	0	44	0
1012+44	175				1012+44	0			

Ramp E1	TOTAL Cu.Ft. of FILL =	17,243	TOTAL Cu.Ft. of CUT =	31,735
	TOTAL Cu.Yd. =	**639**	TOTAL Cu.Yd. =	**1,175**

EARTHWORK CALCULATIONS

Project : *I-95 / SR1 Interchange*
Desc. : ***Preliminary -Ramp G1, Sta. 1317+38 to Sta. 1340+84***
Sta. 1250+94 to Sta. 1258+00, Ramp A
Sta. 1223+00 to Sta. 1340+94, Ramp G1

Date: *4/2/2009*
By: *EGD*
Comm.# *103-059*

FILL				
Station	Area	Average	Dist.	Cu. Ft.
Ramp A stationing				
1250+94	*1214*	1262	6	7,572
1251+00	*1310*	1278	100	127,800
1252+00	*1246*	1093	150	163,950
1253+50	*940*	977	150	146,550
1255+00	*1014*	938.5	117	109,805
1256+17	*863*	580	0	0
1256+17	*297*	277.5	33	9,158
1256+50	*258*	245	50	12,250
1257+00	*232*	210	50	10,500
1257+50	*188*	185.5	0	0
1257+50	*183*	177.5	50	8,875
1258+00	*172*			0
Ramp G1				
1323+00	*567*	525	100	52,500
1324+00	*483*	434	100	43,400
1325+00	*385*	471	0	0
1325+00	*557*	519.5	50	25,975
1325+50	*482*	497.5	50	24,875
1326+00	*513*	363.5	50	18,175
1326+50	*214*	107	50	5,350
1327+00	*0*	0	50	0
1327+50	*0*	0	50	0
1328+00	*0*	0	100	0
1329+00	*0*	0	0	0
1329+00	*0*	0	100	0
1330+00	*0*	0	50	0
1330+50	*0*	2	100	200
1331+50	*4*	2	50	100
1332+00	*0*	0	50	0
1332+50	*0*	0	0	0
1332+50	*0*	0	50	0
1333+00	*0*	0	100	0
1334+00	*0*	0	150	0
1335+50	*0*	0	0	0
1335+50	*0*	1	50	50
1336+00	*2*	6	100	600
1337+00	*10*	5	100	500
1338+00	*0*	2.5	100	250
1339+00	*5*	38	50	1,900
1339+50	*71*	326.5	100	32,650
1340+50	*582*	582	34	19,788
1340+84	*582*			

CUT				
Station	Area	Average	Dist.	Cu. Ft.
1250+94	*0*	0	6	0
1251+00	*0*	0	100	0
1252+00	*0*	0	150	0
1253+50	*0*	0	150	0
1255+00	*0*	0	117	0
1256+17	*0*	0	0	0
1256+17	*0*	3	33	99
1256+50	*6*	7.5	50	375
1257+00	*9*	7.5	50	375
1257+50	*6*	6	0	0
1257+50	*6*	6	50	300
1258+00	*6*			0
1323+00	*0*	0	100	0
1324+00	*0*	0	100	0
1325+00	*0*	2.5	0	0
1325+00	*5*	5	50	250
1325+50	*5*	8	50	400
1326+00	*11*	40.5	50	2,025
1326+50	*70*	437	50	21,850
1327+00	*804*	1013.5	50	50,675
1327+50	*1223*	1272.5	50	63,625
1328+00	*1322*	1164	100	116,400
1329+00	*1006*	1114.5	0	0
1329+00	*1223*	938	100	93,800
1330+00	*653*	545.5	50	27,275
1330+50	*438*	319.5	100	31,950
1331+50	*201*	198.5	50	9,925
1332+00	*196*	211.5	50	10,575
1332+50	*227*	159	0	0
1332+50	*91*	88.5	50	4,425
1333+00	*86*	79.5	100	7,950
1334+00	*73*	79.5	150	11,925
1335+50	*86*	70.5	0	0
1335+50	*55*	94.5	50	4,725
1336+00	*134*	123.5	100	12,350
1337+00	*113*	120.5	100	12,050
1338+00	*128*	106.5	100	10,650
1339+00	*85*	42.5	50	2,125
1339+50	*0*	0	100	0
1340+50	*0*	0	34	0
1340+84	*0*			

TOTAL Cu.Ft. of FILL =	822,772
TOTAL Cu.Yd. =	**30,473**

TOTAL Cu.Ft. of CUT =	496,099
TOTAL Cu.Yd. =	**18,374**

EARTHWORK CALCULATIONS

Project : *I-95 / SR1 Interchange*
Desc. : ***Preliminary -Ramp G2 and S***
Ramp G2 - Sta. 1410+00 to Sta. 1414+40
Ramp S - Sta. 212+50 to Sta. 218+61

Date: *3/26/2009*
By: *ZJS/EGD*

Comm.# *103-059*

Ramp G2

FILL					CUT				
Station	Area	Average	Dist.	Cu. Ft.	Station	Area	Average	Dist.	Cu. Ft.
1410+00	*15*	19.5	150	2,925	*1410+00*	*32*	32.5	150	4,875
1411+50	*24*	25	50	1,250	*1411+50*	*33*	33	50	1,650
1412+00	*26*	18.5	50	925	*1412+00*	*33*	16.5	50	825
1412+50	*11*	11	50	550	*1412+50*	*0*	0	50	0
1413+00	*11*	8	50	400	*1413+00*	*0*	5	50	250
1413+50	*5*	2.5	90	225	*1413+50*	*10*	18.5	90	1,665
1414+40	*0*				*1414+40*	*27*			

Ramp G2	TOTAL Cu.Ft. of FILL =	6,275	TOTAL Cu.Ft. of CUT =	9,265
	TOTAL Cu.Yd. =	**232**	TOTAL Cu.Yd. =	**343**

Ramp S

212+70	*0*	4.5	30	135	*212+70*	*26*	28.5	30	855
213+00	*9*	17.5	50	875	*213+00*	*31*	37	50	1,850
213+50	*26*	33	50	1,650	*213+50*	*43*	40.5	50	2,025
214+00	*40*	28.5	50	1,425	*214+00*	*38*	26	50	1,300
214+50	*17*	28	50	1,400	*214+50*	*14*	7	50	350
215+00	*39*	59	125	7,375	*215+00*	*0*	0	125	0
216+25	*79*	85	0	0	*216+25*	*0*	0	0	0
216+25	*91*	87.5	25	2,188	*216+25*	*0*	0	25	0
216+50	*84*	75	100	7,500	*216+50*	*0*	0	100	0
217+50	*66*	47.5	50	2,375	*217+50*	*0*	0	50	0
218+00	*29*	15	50	750	*218+00*	*0*	29	50	1,450
218+50	*1*	0.5	11	6	*218+50*	*58*	65.5	11	721
218+61	*0*				*218+61*	*73*			

Ramp S	TOTAL Cu.Ft. of FILL =	25,678	TOTAL Cu.Ft. of CUT =	8,551
	TOTAL Cu.Yd. =	**951**	TOTAL Cu.Yd. =	**317**

EARTHWORK CALCULATIONS

Project : *I-95 / SR1 Interchange*
Desc. : ***Preliminary -Ramp R and R1***
Ramp R - Sta. 1511+68 to Sta. 1524+91
Ramp R1 - Sta. 103+50 to Sta. 106+00

Date: *3/30/2009*
By: *ZJS/EGD*
Comm.# *103-059*

FILL				
Station	Area	Average	Dist.	Cu. Ft.
Ramp R				
1511+68	*4*	4	132	528
1513+00	*4*	10	50	500
1513+50	*16*	15.5	100	1,550
1514+50	*15*	21	50	1,050
1515+00	*27*	20	100	2,000
1516+00	*13*	17.5	100	1,750
1517+00	*22*	24	150	3,600
1518+50	*26*	28.5	0	0
1518+50	*31*	22.5	150	3,375
1520+00	*14*	9	50	450
1520+50	*4*	3	100	300
1521+50	*2*	14	100	1,400
1522+50	*26*	13	50	650
1523+00	*0*	0	100	0
1524+00	*0*	0	25	0
1524+25	*0*	263	25	6,575
1524+50	*526*	526	41	21,566
1524+91	*526*			

CUT				
Station	Area	Average	Dist.	Cu. Ft.
1511+68	*20*	36	132	4,752
1513+00	*52*	51	50	2,550
1513+50	*50*	38	100	3,800
1514+50	*26*	25.5	50	1,275
1515+00	*25*	26.5	100	2,650
1516+00	*28*	25.5	100	2,550
1517+00	*23*	23.5	150	3,525
1518+50	*24*	44.5	0	0
1518+50	*65*	73.5	150	11,025
1520+00	*82*	101	50	5,050
1520+50	*120*	141.5	100	14,150
1521+50	*163*	94.5	100	9,450
1522+50	*26*	61	50	3,050
1523+00	*96*	73.5	100	7,350
1524+00	*51*	37.5	25	938
1524+25	*24*	12	25	300
1524+50	*0*	0	41	0
1524+91	*0*			

Ramp R	TOTAL Cu.Ft. of FILL =	45,294
	TOTAL Cu.Yd. =	**1,678**

	TOTAL Cu.Ft. of CUT =	72,415
	TOTAL Cu.Yd. =	**2,682**

Ramp R1				
103+50	*921*	921	50	46,050
104+00	*921*	471	50	23,550
104+50	*21*	11.5	50	575
105+00	*2*	5	50	250
105+50	*8*	8	50	400
106+00	*8*			

103+50	*0*	0	50	0
104+00	*0*	15.5	50	775
104+50	*31*	82	50	4,100
105+00	*133*	110	50	5,500
105+50	*87*	87	50	4,350
106+00	*87*			0
Ramp G1				
1332+50	*91*	73	300	21,900
1335+50	*55*			0
				0
				0

Ramp R1	TOTAL Cu.Ft. of FILL =	70,825
	TOTAL Cu.Yd. =	**2,623**

	TOTAL Cu.Ft. of CUT =	36,625
	TOTAL Cu.Yd. =	**1,356**

EARTHWORK CALCULATIONS

Project : *I-95 / SR1 Interchange*
Desc. : ***Preliminary -Ramp U and U1***
Ramp U - Sta. 730+00 to Sta. 740+50
Ramp U1 - Sta. 832+00 to Sta. 836+65

Date: *3/26/2009*
By: *ZJS/EGD*

Comm.# *103-059*

Ramp U

FILL					CUT				
Station	Area	Average	Dist.	Cu. Ft.	Station	Area	Average	Dist.	Cu. Ft.
730+00	*155*	183	50	9,150	*730+00*	*30*	29	50	1,450
730+50	*211*	246	50	12,300	*730+50*	*28*	30	50	1,500
731+00	*281*	337.5	50	16,875	*731+00*	*32*	19	50	950
731+50	*394*	500	50	25,000	*731+50*	*6*	5.5	50	275
732+00	*606*	692.5	100	69,250	*732+00*	*5*	16.5	100	1,650
733+00	*779*	715	100	71,500	*733+00*	*28*	29.5	100	2,950
734+00	*651*	528	150	79,200	*734+00*	*31*	22	150	3,300
735+50	*405*	413.5	50	20,675	*735+50*	*13*	11.5	50	575
736+00	*422*	304.5	50	15,225	*736+00*	*10*	23.5	50	1,175
736+50	*187*	101	50	5,050	*736+50*	*37*	138.5	50	6,925
737+00	*15*	7.5	50	375	*737+00*	*240*	222	50	11,100
737+50	*0*	0	50	0	*737+50*	*204*	190	50	9,500
738+00	*0*	3.5	0	0	*738+00*	*176*	243	0	0
738+00	*7*	3.5	50	175	*738+00*	*310*	292.5	50	14,625
738+50	*0*	0	50	0	*738+50*	*275*	415	50	20,750
739+00	*0*	0	150	0	*739+00*	*555*	610.5	150	91,575
740+50	*0*				*740+50*	*666*			

Ramp U	TOTAL Cu.Ft. of FILL =	324,775	TOTAL Cu.Ft. of CUT =	168,300
	TOTAL Cu.Yd. =	**12,029**	TOTAL Cu.Yd. =	**6,233**

Ramp U1

832+00	*0*	0	100	0	*832+00*	*34*	92	100	9,200
833+00	*0*	0	150	0	*833+00*	*150*	279	150	41,850
834+50	*0*	0	50	0	*834+50*	*408*	446.5	50	22,325
835+00	*0*	0	50	0	*835+00*	*485*	515.5	50	25,775
835+50	*0*	0	50	0	*835+50*	*546*	462.5	50	23,125
836+00	*0*	0	50	0	*836+00*	*379*	320	50	16,000
836+50	*0*	0	15	0	*836+50*	*261*	232.5	15	3,488
836+65	*0*				*836+65*	*204*			

Ramp U1	TOTAL Cu.Ft. of FILL =	0	TOTAL Cu.Ft. of CUT =	141,763
	TOTAL Cu.Yd. =	**0**	TOTAL Cu.Yd. =	**5,250**

EARTHWORK CALCULATIONS

Project : *I-95 / SR1 Interchange*
Desc. : ***Preliminary -Southwest Loop RampRamp***
Sta. 1900+00 to Sta. 1910+10

Date: *3/30/2009*
By: *ZJS/EGD*

Comm.# *103-059*

FILL				
Station	Area	Average	Dist.	Cu. Ft.
1900+00	*12*	7.5	155	1,163
1901+55	*3*	3	0	0
1901+55	*3*	4	45	180
1902+00	*5*	2.5	0	0
1902+00	*0*	0.5	100	50
1903+00	*1*	1	0	0
1903+00	*1*	2	50	100
1903+50	*3*	4	50	200
1904+00	*5*	4.5	100	450
1905+00	*4*	2	50	100
1905+50	*0*	1.5	0	0
1905+50	*3*	1.5	50	75
1906+00	*0*	0	50	0
1906+50	*0*	8	100	800
1907+50	*16*	10.5	50	525
1908+00	*5*	7.5	200	1,500
1910+00	*10*	5	10	50
1910+10	*0*			0

CUT				
Station	Area	Average	Dist.	Cu. Ft.
1900+00	*20*	19.5	155	3,023
1901+55	*19*	20	0	0
1901+55	*21*	20.5	45	923
1902+00	*20*	21.5	0	0
1902+00	*23*	22.5	100	2,250
1903+00	*22*	24	0	0
1903+00	*26*	24	50	1,200
1903+50	*22*	20.5	50	1,025
1904+00	*19*	25	100	2,500
1905+00	*31*	39	50	1,950
1905+50	*47*	43	0	0
1905+50	*39*	48.5	50	2,425
1906+00	*58*	60	50	3,000
1906+50	*62*	55.5	100	5,550
1907+50	*49*	41.5	50	2,075
1908+00	*34*	31	200	6,200
1910+00	*28*	14	10	140
1910+10	*0*			0

TOTAL Cu.Ft. of FILL =	5,193
TOTAL Cu.Yd. =	**192**

TOTAL Cu.Ft. of CUT =	32,260
TOTAL Cu.Yd. =	**1,195**

EARTHWORK CALCULATIONS

Project : *I-95 / SR1 Interchange*
Desc. : ***Preliminary -Stanton Christiana Road***
Sta. 2010+00 to Sta. 2015+80

Date: *3/26/2009*
By: *EGD*

Comm.# *103-059*

FILL				
Station	Area	Average	Dist.	Cu. Ft.
2010+00	*11*	23.5	50	1,175
2010+50	*36*	63	50	3,150
2011+00	*90*	150	50	7,500
2011+50	*210*	108	50	5,400
2012+00	*6*	5.5	50	275
2012+50	*5*	31	50	1,550
2013+00	*57*	44	50	2,200
2013+50	*31*	22.5	50	1,125
2014+00	*14*	8.5	50	425
2014+50	*3*	2	50	100
2015+00	*1*	4.5	50	225
2015+50	*8*	8	30	240
2015+80	*8*			0

CUT				
Station	Area	Average	Dist.	Cu. Ft.
2010+00	*23*	11.5	50	575
2010+50	*0*	0	50	0
2011+00	*0*	0	50	0
2011+50	*0*	0	50	0
2012+00	*0*	0	50	0
2012+50	*0*	3	50	150
2013+00	*6*	9.5	50	475
2013+50	*13*	15.5	50	775
2014+00	*18*	20	50	1,000
2014+50	*22*	21.5	50	1,075
2015+00	*21*	24.5	50	1,225
2015+50	*28*	28	30	840
2015+80	*28*			0

TOTAL Cu.Ft. of FILL =	23,365
TOTAL Cu.Yd. =	**865**

TOTAL Cu.Ft. of CUT =	6,115
TOTAL Cu.Yd. =	**226**

RUMMEL, KLEPPER & KAHL, LLP

"A Tradition Of Excellence" since 1923

Subject SR 1 Main Int
Use Backfill Quant

Page ..... of

Cm. No. .....

Prepared By RLS Date 5.6.9 Checked By ..... Date .....

Summary

		Quantity	
Wall	1	4,143 cy	
	2	4,216 cy	
	3	10,216 cy	
	4	3,062 cy	
	5	3,046 cy	24,683
	6	924 cy	
	7	8,231 cy	
	8	3,040 cy	
	9	11,093 cy	
	10	4,393 cy	27,681
	12	6,036 cy	
	13	4,683 cy	
	14	10,217 cy	
	15	12,654 cy	
	16	939 cy	34,529
Total:		86,893 cy	

Use: 87,000 cy for Earthwork Est. Qty

Quant. Based on Avg Strap Length of 0.8 * H

RUMMEL, KLEPPER & KAHL, LLP

"A Tradition Of Excellence" since 1923

Subject SR Hall Interch
MSE Backfill Quant.

Page 1 of

Cm. No.

Prepared By RLS Date 5.4.9 Checked By Date

MSE WALL BACKFILL VOLUME CALCULATIONS FOR SUBTRACTION FROM PRELIMINARY EARTHWORK ONLY!
ALL STRAP LENGTH (W) WAS ASSUMED TO BE 0.8 H FOR THIS PRELIMINARY ESTIMATE

MSE WALL NO. 1

HT = $\left[(94 + 89.5) * \frac{1}{2}\right] - 61.0 = 30.75'$

REINF. ZONE W = $30.75 * 0.8 = 24.6'$

L = 134.42'

VOL = $(30.75' \times 24.6' * 134.42)\ 1/27 = \underline{3766\ CY}$

HT = $(28.5 + 21.9)\ 1/2 = \underline{25.2}$

REIN. ZONE W = $25.2 * 0.8 = 20.2$

L = 20'

VOL = $(25.2 * 20.2 * 20)\ 1/27 = \underline{377\ CY}$

$\boxed{\text{TOTAL} = 4143\ CY}$

RUMMEL, KLEPPER & KAHL, LLP

"A Tradition Of Excellence" since 1923

Subject SR1 Mine Inc. MSE Backfill Quant.

Page 2 of

Cm. No.

Prepared By PLS Date 5.4.9 Checked By Date

Wall No. 2

HT = (40.5 + 39.5) 1/2 = 40'

REIN. ZONE = 40 * 0.8 = 32.0'

L = 74.6'

VOL = (40 * 32 * 74.6) 1/27 = 3537 cy

HT. = (34.7 + 40.5) 1/2 = 37.6'

(REIN. ZONE) W = 37.6 * 0.8 = 30.1

L = 16.2'

VOL = (37.6 * 30.1 * 16.2) 1/27 = 679 cy

TOTAL = 4216 cy

RUMMEL, KLEPPER & KAHL, LLP

"A Tradition Of Excellence" since 1923

Subject SRI INT. MSE WALL BACKFILL QUANT. Page 3 of

Cm. No.

Prepared By RLS Date 5.4.9 Checked By Date

Wall No. 3

HT: $(38.0 + 34.5)\ 1/2 = 36.25'$

W (REIN. ZONE) $= 36.25 * 0.8 = 29'$

$L = 243.25'$

VOL: $(36.25' * 29' * 243.25)\ 1/27 =$ 9471 cy

$H = (32.3 + 38)\ 1/2 = 35.2'$

$W = 35.2 * 0.8 = 28.2'$

$L = 20.25'$

VOL: $(35.2 * 28.2 * 20.25)\ 1/27 =$ 745 cy

TOTAL = 10,216 cy

MSE Wall 4

H = (7.8' + 15.2) 1/2 = 11.5' w = 11.5 * 0.8 = 9.2' L = 97'
Vol = (11.5' * 9.2' * 97') 1/27 = 380 cy

H = (14.2 + 19) 1/2 = 16.6' w = 16.6' * 0.8 = 13.3' L = 50'
Vol = (16.6' * 13.3' * 50') 1/27 = 409 cy

H = (18 + 23.4) 1/2 = 20.7' w = 20.7' * 0.8 = 16.6' L = 50'
Vol = (20.7' * 16.6' * 50') 1/27 = 636 cy

H = (22.4 + 29.0) 1/2 = 25.7' w = 25.7' * 0.8 = 20.6' L = 60'
Vol = (25.7' * 20.6 * 60') 1/27 = 1142 cy

H = (28.0 + 29.7) 1/2 = 28.9 w = 23.1' L = 20'
Vol = (28.9' * 23.1' * 20') 1/27 = 495 cy

TOTAL = 3062 cy

RUMMEL, KLEPPER & KAHL, LLP
"A Tradition Of Excellence" since 1923

Subject SR 1 Main Inc. Page 5 of
MSE Wall Backfill Cm. No.
Prepared By ELS Date 5.4.9 Checked By Date

MSE Wall No. 5

H = (28.7 + 27.0) 1/2 = 27.9' W = 27.9 * 0.8 = 22.3 L = 113.3'
VOL = (27.9' * 22.3' * 113.3) 1/27 = 2611 CY

H = (28.5 + 34.5) 1/2 = 31.5' W = 25.2' L = 14.8'
VOL = (31.5' * 25.2 * 14.8') 1/27 = 435 CY

TTL = 3046 CY

Wall No. 6

$W = H * 0.8$

$H = (6.8 + 12.5)\,1/2 = 9.65'$ $W = 9.65' \times 0.8 = 7.7'$ $L = 37.5'$
Vol. $= (9.65' * 7.7' * 37.5')\,1/27 = 103$ cy

$H = (10.5 + 16.8)\,1/2 = 13.65'$ $W = 10.9$ ($H * 0.8$) $L = 40'$
Vol: $(13.65 * 10.9 * 40)\,1/27 = 221$ cy

$H = (14.3 + 18.3)\,1/2 = 16.3'$ $W = 13.1'$ $L = 40'$
Vol $= (16.3' * 13.1' * 40')\,1/27 = 316$ cy

$H = (16.3' + 19.7')\,1/2 = 18'$ $W = 14.4'$ $L = 40'$
Vol $= (18' * 14.4' * 40')\,1/27 = 384$ cy

$H = (17.2 + 18.9)\,1/2 = 18.1'$ $W = 14.5'$ $L = 19'$
Vol $= (18.1' * 14.5' * 19')\,1/27 = 185$ cy

TOTAL = 924 cy

RUMMEL, KLEPPER & KAHL, LLP
"A Tradition Of Excellence" since 1923

Subject SR 1 Main Line — Page 7 of
MSE Wall Backfill — Cm. No.
Prepared By RLS Date 5.5.9 Checked By Date

MSE Wall No. 7

$W = H * 0.8$

H = (25.16 + 22.1) ½ = 23.63' W = 18.9 L = 90'
VOL = (23.63' * 18.9 * 90) 1/27 = 1678 cy

H = (22.6 + 20.05) ½ = 21.33' W = 17.1' L = 90'
VOL = (21.33 x 17.1 * 90) 1/27 = 1216 cy

H = (20.55 + 18.16) ½ = 19.4' W = 15.5 L = 90'
VOL = (19.4 * 15.5 * 90) 1/27 = 1002 cy

H = (19.66 + 18.3) ½ = 19.0' W = 15.2 L = 45'
VOL = (19.0 * 15.2 * 45) 1/27 = 481 cy

H = (20.3 + 19.28) ½ = 19.8 W = 15.8 L = 45'
VOL = (19.8' * 15.8 x 45') 1/27 = 522 cy

H = (19.78 + 18.8) ½ = 19.3 W = 15.5 L = 27
VOL = (19.3 * 15.5 * 27) 1/27 = 299 cy

H = (19.3 + 18.7) ½ = 19.0 W = 15.2 L = 27
VOL = (19.0 * 15.2 * 27) 1/27 = 289 cy

H = (20.2 + 19.4) ½ = 19.8' W = 15.9 L = 36'
VOL = (19.8 * 15.9 * 36') 1/27 = 420 cy

H = (20.4 + 19.7) ½ = 20.1' W = 16.0' L = 20'
VOL = (20.1 * 16 * 20) 1/27 = 238 cy

SUB-TOTAL = 6145 cy

MSE Wall No. 7 (cont.)

$W = H * 0.8$

$H = (20.7 + 20)\,1/2 = 20.4'$ $W = 16.3$ $L = 20'$

$VOL = (20.4 * 16.3 * 20)\,1/27 = \underline{246\ CY}$

$H = (21 + 20.5)\,1/2 = 20.8'$ $W = 16.6$ $L = 20'$

$VOL = (20.8 * 16.6 * 20)\,1/27 = \underline{256\ CY}$

$H = (19.5 + 16.0)\,1/2 = 17.8'$ $W = 14.2'$ $L = 30'$

$VOL = (17.8' * 14.2 * 30)\,1/27 = \underline{281\ CY}$

$H = (15.5 + 10.6)\,1/2 = 13.1$ $W = 10.5$ $L = 180'$

$VOL = (13.1 * 10.5 * 180)\,27 = \underline{917\ CY}$

$H = (11.1 + 5.3)\,1/2 = 8.2'$ $W = 6.6$ $L = 190'$

$VOL = (8.2 * 6.6 * 190)\,1/27 = \underline{381\ CY}$

$H = (4.3 + 2.4)\,1/2 = 3.4'$ $W = 2.7$ $L = 15'$

$VOL = (3.4 * 2.7 * 15)\,1/27 = \underline{5\ CY}$

SUB-TOTAL = 2086 CY

TOTAL WALL NO. 7 = 8231 CY

RUMMEL, KLEPPER & KAHL, LLP

"A Tradition Of Excellence" since 1923

Subject SR1 MAIN INT. MSE WALL BACKFILL

Page 9 of

Cm. No.

Prepared By MLS Date 5.5.9 Checked By Date

MSE WALL No. 8

H = (10.3 + 12.1) ½ = 11.2 W = 9.0 L = 67.5

VOL = (11.2 * 9.0 * 67.5) 1/27 = 252 CY

H = (10.6 + 16.2) ½ = 13.4 W = 10.7 L = ~~207.1'~~ 198.1'

VOL = (13.4 * 10.7 * 198.1) 1/27 = 1052 CY

H = (17.2 + 22.1) ½ = 19.7 W = 15.7 L = 107'

VOL = (19.7 * 15.7 * 107) 1/27 = 1226 CY

H = (22.1 + 29.4) ½ = 25.7 W = 20.6 L = 26

VOL = (25.7 * 20.6 * 26) 1/27 = 510 CY

TOTAL = 3040 CY

MSE Wall No. 9

H = (30.54 + 27.88) ½ = 29.21 w = 23.4 L = 90

Vol = 2278 cy

H = (28.88 + 25.99) ½ = 27.44' w = 22.0 L = 90

Vol = 2012 cy

H = (26.99 + 23.89) ½ = 25.44' w = 20.4 L = 90

Vol = 1730 cy

H = (23.89 + 23.3) ½ = 23.6 w = 18.9' L = 20'

Vol = 330 cy

H = (24.3 + 21.58) ½ = 22.9 w = 18.4 L = 70

Vol = 1093 cy

H = (22.58 + 19.08) ½ = 20.83 w = 16.7 L = 90

Vol = 1160 cy

H = (20.08 + 16.54) ½ = 18.31 w = 14.7 L = 90

Vol = 897 cy

Sub-total = 9500

RUMMEL, KLEPPER & KAHL, LLP
"A Tradition Of Excellence" since 1923

Subject SR1 Mall Imp. MSE Wall Backfill | Page 11 of | Cm. No.
Prepared By RLS Date 5.5.9 Checked By Date

MSE Wall No. 9

A= (17.5 + 13.99) ½ = 15.8 W= 12.6 L= 90'
Vol= 664 cy

H= (14.99 + 11.45) ½ = 13.2' W= 10.6 L= 90'
Vol= 465 cy

H= (12.45 + 8.91) ½ = 10.7 W= 8.6 L= 90'
Vol= 307 cy

H= (9.91 + 8.46) ½ = 9.2 W= 7.4 L= 62.4'
Vol= 157 cy

Sub-Total = 1593 cy

TOTAL Wall No 9 = 11,093 cy

RUMMEL, KLEPPER & KAHL, LLP

"A Tradition Of Excellence" since 1923

Subject SR-1 Main Interch. MSE Wall Backfill | Page 12 of | Cm. No.

Prepared By RLS | Date 5.6.9 | Checked By | Date

MSE Wall 10

$H = \left(28.47 + 25.66 + 20.42 + 14.92\right) 1/4 = 22.4'$ $W = 17.9$ $L = 270'$

Vol: 4010 cy

$H = (14.92 + 9.76)\ 1/2 = 12.34'$ $W = 9.9$ $L = 84.58'$

Vol = 383 cy

TOTAL = 4393 cy

RUMMEL, KLEPPER & KAHL, LLP

"A Tradition Of Excellence" since 1923

Subject SR 1 Mall Int. MSE Wall Backfill

Page 13 of

Cm. No.

Prepared By RLS Date

Checked By Date

MSE Wall No. 12

W = H * 0.8

H = (9.58 + 13.98')½ = 11.78' W = 9.4' L = 90'

VOL = 369 CY

H = (16.98 + 21.33)½ = 19.16' W = 15.3' L = 90'

VOL = 977. CY

H = (22.33 + 23.4)½ = 22.9' W = 18.3' L = 20'

VOL = 310 CY

H = (25.4 + 26.3)½ = 25.9' W = 20.7' L = 20'

VOL = 397 CY

H = (28.3 + 30.37)½ = 29.3' W = 23.5' L = 50'

VOL = 1275 CY

H = (30.37 + 33.99)½ = 32.18' W = 25.7 L = 88.4'

VOL. = 2708 CY

TOTAL = 6036 CY

Wall No. 13 $W_t = 0.8 \times H$

$H = (30.39 + 26.58 + 22.39) \frac{1}{3} = 26.45'$ $W = 21.2'$ $L = 180'$

VOL = 3738 CY

$H = (18.89 + 14.40) \frac{1}{2} = 16.65'$ $W_t = 13.3'$ $L = 90'$

VOL = 738 CY

$H = (11.40 + 7.48) \frac{1}{2} = 9.44'$ $W_t = 7.6'$ $L = 77.8'$

VOL = 207 CY

TOTAL = 4683 CY

MSE Wall No. 14

$H = (30.68 + 27.41)\frac{1}{2} = 29.05'$ $W = 23.2'$ $L = 90'$

VOL: 2247 cy

$H = (28.41 + 25.06)\frac{1}{2} = 26.74'$ $W = 21.4'$ $L = 90'$

VOL = 1908 cy

$H = (26.06 + 22.69)\frac{1}{2} = 24.38'$ $W = 19.5'$ $L = 90'$

VOL = 1585 cy

$H = (24.19 + 20.84)\frac{1}{2} = 22.52'$ $W = 18.0'$ $L = 90'$

VOL = 1351 cy

$H = (21.84 + 18.47)\frac{1}{2} = 20.16'$ $W = 16.1'$ $L = 90'$

VOL = 1082 cy

$H = (19.47 + 16.09)\frac{1}{2} = 17.78'$ $W = 14.2'$ $L = 90'$

VOL = 842 cy

$H = (17.09' + 13.72)\frac{1}{2} = 15.41'$ $W = 12.3'$ $L = 90'$

VOL = 632 cy

$H = (14.72' + 11.34)\frac{1}{2} = 13.03'$ $W = 10.4'$ $L = 90'$

VOL = 452 cy

$H = (12.34 + 11.78)\frac{1}{2} = 12.06'$ $W = 9.7'$ $L = 20'$

VOL = 118 cy

TOTAL = 10,217 cy

Wall No. 15

H = (8.5 + 11.0) ½ = 9.75' W = 7.8 L = 60'
Vol = 169 cy

H = (10.0 + 13.1) ½ = 11.55' W = 9.3 L = 90'
Vol = 358 cy

H = (14.1 + 15.9) ½ = 15' W = 12' L = 90'
Vol = 600 cy

H = (14.4 + 17.6) ½ = 16' W = 12.8' L = 90'
Vol = 683 cy

H = (16.6 + 20.0) ½ = 18.3' W = 14.6' * 90'
Vol = 891 cy

H = (19.0 + 22.3) ½ = 20.65' W = 16.5 L = 90'
Vol = 1136 cy

H = (21.3 + 24.8) ½ = 23.1' W = 18.4' L = 90'
Vol = 1417 cy

H = (23.8 + 27) ½ = 25.4' W = 20.3' L = 90'
Vol = 1719 cy

Sub-total = 6973 cy

WALL No. 15 (CONT.)

H = (26 + 29.7) 1/2 = 27.8' W = 22.3' L = 90'
VOL = 2067 cy

H = (30.2 + 32.2) 1/2 = 31.2' W = 25.0 L = 90'
VOL = 2600 cy

H = (30.7 + 31.8) 1/2 = 31.3' W = 25' L = 35'
VOL = 1014 cy

Sub-total = 5681 cy

TOTAL = 12,654 cy

RUMMEL, KLEPPER & KAHL, LLP

"A Tradition Of Excellence" since 1923

Subject SR1 Main Int. MSE Wall Backfill

Page 18 of

Cm. No.

Prepared By RLS Date 5.6.9 Checked By Date

Wall No. 16

H = (6.69 + 17.7')½ = 12.2' W = 9.8 L = 54.4'

Vol = 241 cy

H = (18.7 + 26.08)½ = 22.39' W = 17.9 L = 37'

Vol = 550 cy

H = 26.08 W = 20.9' L = 7.3'

Vol = 148 cy

TOTAL = 939 cy

RUMMEL, KLEPPER & KAHL, LLP

"A Tradition Of Excellence" since 1923

Subject SB1 MOU INT. PREL. COST. EST.

Page of

Cm. No.

Prepared By RLS Date 5.2009 Checked By Date

BORROW REQUIRED FOR CONC. REMOVAL

ASSUME 25% of Conc. Removal is in fill.

163,537 sf * 1' * 1/27 = 6,057 cy * 0.25 = 1514 cy

SAY 1500 cy

RUMMEL, KLEPPER & KAHL, LLP

"A Tradition Of Excellence" since 1923

Subject CONCRETE REMOVAL QUANITTES Page of

Cm. No.

Prepared By ZJS Date 4/21/09 Checked By Date

39799.8969 sq ft
67702.8932 sq ft
+ 56034.4203 sq ft
163537.1904 ≈ 163537 sq ft of concrete removal

18,171 SY

~~SAY 164,000 SF~~

SAY: 18,200 SY

M:\projects\2003\03059_deltrnpk\SRIMall\Cadd\Working\wk00_zjs_SRI_SF.dgn

LEVEL: 225 UT_X: Sanitary Sewer - Underground

DRAINAGE QUANTITIES

PRELIMINARY DRAINAGE QUANTITIES

rshaffer

From: Bob Palmer [rpalmer@rkk.com]
Sent: Thursday, May 07, 2009 8:50 AM
To: rshaffer
Subject: Re: SR-1 preliminary quantities
Attachments: image002.jpg; image003.gif

Bob:

The quantities in the email trail are basically correct - we probably added 3 or 4 more inlets and 2 or 3 manholes since then.

My quick and dirty estimation of the percentages on pipe sizes is:

15" - 21.3% (4772 lf)
18" - 26.4% (5904 lf)
21" - 5.3% (1185 lf)
24" - 14.2% (3164 lf)
30" - 4.6% (1017 lf)
36" - 6.6% (1476 lf)
42" - 14.7% (3276 lf)
48" - 6.9% (1547 lf)

TOTAL = 22,341 LF

The largest pipe size running down I-95 will still be about a 42". Across SR-1 at Sta. 1270+50 and Sta. 1616+50 will probably be 48". That's the biggest pipe size I anticipate.

BOB PALMER, P.E., C.P.S.S.
SENIOR WATER RESOURCE ENGINEER

RK&K
81 Mosher Street
Baltimore, MD 21217

410.462.9242 P
410.728.2834 F
www.rkk.com

----- Original Message -----
From: "rshaffer" <rshaffer@rkk.com>
To: "Bob Palmer" <rpalmer@rkk.com>
Sent: Wednesday, May 6, 2009 2:46:37 PM GMT -05:00 US/Canada Eastern
Subject: FW: SR-1 preliminary quantities

Please verify that the quantities listed in the email train below are what we should use for the project.
In addition, it would be help helpful if you could provide some assumptions on the pipe sizes.
I assume that we are not to that level of detail yet but I would suggest that we make some basic assumptions as

to the percentages that are say 15", 18", 24", etc. I think you and Kevin are probably better suited to make these assumptions that I am at this time.
I think we should have some idea of the largest sizes that say are running down I-95 and the big crossing under SR 1.

Bob Shaffer
Design Team Leader

RK&K

81 Mosher Street
Baltimore, Maryland 21217
410.728.2900
800.787.3755 (toll free)
410.462.9392 (direct)

From: Bob Palmer [mailto:rpalmer@rkk.com]
Sent: Monday, March 16, 2009 9:18 AM
To: rshaffer
Subject: Re: SR-1 preliminary quantities

Bob:

It does seem high. I believe he selected the pipe linework with the "select attributes" routine and than used the measure length command (I suggested doing it this way). I just did this and came up with over 42,000 LF. Than I selected the linework with a more specific attribute and came up with 22,341 LF. Why the diference I don't know for sure but this makes more sense. Still this way has some error due to some pipes being drawn to center of structures. If you need a more exact number someone will have to go measure and total each one at a time.

Bob Palmer, P.E., C.P.S.S.
Rummel, Klepper & Kahl, LLP
81 Mosher Street
Baltimore, Maryland 21217
410.462.9242 (Direct)
410.728.2834 (Fax)

----- Original Message -----
From: "rshaffer" <rshaffer@rkk.com>
To: "Bob Palmer" <rpalmer@rkk.com>
Sent: Monday, March 16, 2009 8:48:08 AM GMT -05:00 US/Canada Eastern
Subject: RE: SR-1 preliminary quantities

40,830 lf of pipe seems high. How comfortable are you with this number? How did we come up with such an exact number?
Bob

From: Bob Palmer [mailto:rpalmer@rkk.com]

Sent: Monday, March 16, 2009 8:30 AM
To: rshaffer
Cc: Kevin Anderson; Carey Webb
Subject: Fwd: SR-1 preliminary quantities

Bob:

Kevin had come up with rough quantities and sent them to me - then I got sidetracked with the mall pond. See below for his 2 emails. The numbers have slightly changed since (a few less inlets, pipe, etc.) and I don't see any quantities for abandoned pipe/strucutures. I'll take you up on your offer to have someone else revise/complete then as necessary - Kevin is off for the next 3 days and I have several other projects that need my attention.

Bob Palmer, P.E., C.P.S.S.
Rummel, Klepper & Kahl, LLP
81 Mosher Street
Baltimore, Maryland 21217
410.462.9242 (Direct)
410.728.2834 (Fax)

----- Forwarded Message -----
From: "Kevin Anderson" <kanderson@rkk.com>
To: "Robert E. Palmer" <rpalmer@rkkengineers.com>
Sent: Monday, February 9, 2009 2:32:57 PM GMT -05:00 US/Canada Eastern
Subject: Re: SR-1 preliminary quantities

Bob,

Here are the rest of the requested quantities:

Converting Existing Catch Basins to Manhole - 3 each
Adjust Existing Catch Basin - 2 each
Adjust Existing Manhole - 0 each
Rip Rap - 422 S.Y. (19 occurrences)
Soil Retention Blanket Mulch - 10,870 S.Y. (10,870 L.F. of ditch)

**Notes*: Outfall protection assumed to be 20' x 10' area of rip rap. Soil retention blanket mulch assumed to be 9 S.F. per L.F. and quantified based on length of proposed ditches and swales shown in the plan view cadd files. I did not add any contingencies to the quantities. Adjust Existing Manhole/Inlet is based on horizontal plane only. At a preliminary level, I typically add contingencies to the quantities. Let me know your thoughts.

Thank you.

Kevin Anderson, P.E.
RUMMEL, KLEPPER & KAHL, LLP
81 Mosher Street Baltimore, MD 21217-4250
phone: (410)728-2900, ext. 1179

direct dial: (410)462-9179
Toll Free: 1-800-787-3755
fax: (410)728-2834
email: kanderson@rkk.com

----- Original Message -----
From: "Kevin Anderson" <kanderson@rkk.com>
To: "Robert E. Palmer" <rpalmer@rkkengineers.com>
Sent: Friday, February 6, 2009 10:49:54 AM (GMT-0500) Auto-Detected
Subject: SR-1 preliminary quantities

Bob,

Below are the "rough" quantities for the preliminary submittal.

Inlets - 200 each.
Manholes - 30 each

.

Note: I did not add any contingencies to the quantities. At a preliminary level, I typically add contingencies to the quantities. Let me know your thoughts.

Thank you.

Kevin Anderson, P.E.
RUMMEL, KLEPPER & KAHL, LLP
81 Mosher Street Baltimore, MD 21217-4250
phone: (410)728-2900, ext. 1179

direct dial: (410)462-9179
Toll Free: 1-800-787-3755
fax: (410)728-2834
email: kanderson@rkk.com

PAVEMENT QUANTITIES

Total Roadway Quanities					
Baseline	Type C (tons)	Type B (tons)	BCBC (tons)	GABC (cubic yds)	Concrete (sq yds)
S.W. Loop	184	276.5	376.5	362	0
S.C. Road	131	197	268	344	0
Road A	5	8	10.5	13.5	0
Road A (M&O)	5800.5	0	0	0	0
Ramp U1	63.5	95.5	130	167	0
Ramp U	226	407.5	554	715.5	0
Ramp S	104	116.5	159	204.5	0
Ramp R1	173.5	313	425.5	546.5	0
Ramp R	113.5	170.5	174	223.5	0
Ramp R (M&O)	139	0	0	0	0
Ramp G2	49	88.5	120.5	155	0
Ramp G1	906	1360.5	1389	1784	0
Ramp E1	28.5	43	58.5	75	0
Ramp E	426	640	870	1118	0
Ramp D	307	0	0	0	0
Ramp C1	155	232.5	237.5	305	0
Ramp C	403	605	1028.5	793	0
NB7	1651.5	4960	5063	3658	0
SR1	0	0	0	351.5	1581
RAMP A ~~Road A~~	0	0	0	3839.5	17277.5
Ramp B	0	0	0	2837	12765.5
Ramp B (M&O)	84.5	0	0	0	0
SB7 (M&O)	934	0	0	0	0
SB7	49	89	121	155	
SB7	0	0	0	172	774.5
I-95 Shifted	455.5	2051	2791.5	1344.5	0
Ramp B1	849.5	1915	2604.5	1672.5	0
Ramp B1	109	327	667	321	0
I-95	1455.5	0	0	0	0
Total	14803.00	13896.00	17048.50	21157.50	32398.50

GRAND TOTALS	
Total Type C (tons)	28161.50
Total Type B (tons)	26478.50
Total BCBC (tons)	32158.00
Total GABC (cubic yds)	37844.50
Total Concrete (sq yds)	56895.50

Total Shoulder Quanities					
Baseline	Type C (tons)	Type B (tons)	BCBC (tons)	GABC (cubic yds)	Concrete (sq yds)
Ramp C1	134	201	205.5	265	0
Ramp E	324	487	662	850	0
Ramp E1	21.5	32	44	56	0
Ramp G2	35.5	63.5	86.5	111	0
Ramp R	13.5	20.5	21	26.5	0
Ramp S	75	84.5	115	147.5	0
Ramp U	197	296	402.5	517	0
Ramp U1	54.5	82	111	143	0
S.C. Road	49.5	74	100.5	129	0
S.W. Loop	89	138.5	182	175	0
SR1				177.5	798.5
NB7	886	2662	2717	1963	0
Road A	33	50	68	87	0
Road A (M&O)	1439	0	0	0	
Ramp A	0	0	0	2769	12641
Ramp B	0	0	0	2457	11057.5
Ramp B (M&O)	5935	0	0	0	0
Ramp B1	1136	3127.5	3483	2237	0
Ramp B1 (M&O)	56	0	0	0	0
Ramp D	71.5	179	293	141	0
Ramp D (M&O)	30	0	0	0	0
Ramp G1	387	581	593	762	0
Ramp C	328.5	493.5	839	647	0
Ramp R	68.5	102.5	105	134.5	0
Ramp R (M&O)	106.5	0	0	0	0
SB7	362	1080	1110.5	802	0
SB7 (M&O)	410.5	0	0	0	0
I-95	120	180.5	368	354.5	0
I-95 Shifted	588	2647.5	3603	1735.5	0
I-95 Shifted (M&O)	407.5	0	0	0	0
Total	13358.50	12582.50	15109.50	16687.00	24497.00

RUMMEL, KLEPPER & KAHL, LLP
"A Tradition Of Excellence" since 1923

Subject Roadway Quanities: TYPE C, TYPE B, BCBC, GABC, & CONCRETE | Page 1 of 7 | Cm. No. | Prepared By ZJS | Date 4/1/09 | Checked By | Date

SW Loop

Roadway 14,671 sqft

Type C → 14671 sqft/9 SF/SY = 1630.1 sq yards/ 8.86 = 183.98 TONS ≈ 184 TONS

Type B → 14671 sqft/9 SF/SY = 1630.1 sq yards/ 5.90 = 276.30 TONS ≈ 276.5 TONS

BCBC → 14671 sqft/9 SF/SY = 1630.1 sq yards/ 4.33 = 376.47 TONS ≈ 376.5 TONS

GABC → 14671 sqft * .667ft = 9780.67 ft^3/27 = 362.25 yards^3 ≈ 362 cubic yards

S.C. Road

Roadway 13920 sqft

Type C → 13920 sqft/9 SF/SY = 1546.67 sq yrds/ 11.81 = 130.96 TONS ≈ 131 TONS

Type B → 13920 sqft/9 SF/SY = 1546.67 sq yds/ 7.86 = 196.78 TONS ≈ 197 TONS

BCBC → 13920 sqft/9 SF/SY = 1546.67 sq yds/ 5.78 = 267.59 TONS ≈ 268 TONS

GABC → 13920 sqft * .667ft = 9280 cubic ft/27 = 343.70 yds^3 ≈ 344 yds^3

Road A

Roadway 545 sqft FULL DEPTH

Type C → 545 sqft/9 SF/SY = 60.55 sq yds/ 11.81 = 5.12 TONS ≈ 5 TONS

Type B → 545 sqft/9 SF/SY = 60.55 sq yds/ 7.86 = 7.70 TONS ≈ 8 TONS

BCBC → 545 sqft/9 SF/SY = 60.55 sq yds/ 5.78 = 10.48 TONS ≈ 10.5 TONS

GABC → 545 sqft * .667 Ft = 363.3 ft^3/27 = 13.45 yds^3 ≈ 13.5 yds^3

Roadway 61653 sqft MILL & OVERLAY

Type C → 61653 sqFt/9 SF/SY = 6850.33 sq yds/ 11.81 = 5800.45 TONS ≈ 5800.5 TONS

Ramp U1

Roadway 675 1 sqft FULL DEPTH

Type C → 675 1 sqft / 9 SF/SY = 750.1 sq yds / 11.81 = 63.51 TONS ≈ 63.5 TONS

Type B → 675 1 sqft / 9 SF/SY = 750.1 sq yds / 7.86 = 95.43 TONS ≈ 95.5 TONS

BCBC → 675 1 sq ft / 9 SF/SY = 750.1 sq yds / 5.78 = 129.78 TONS ≈ 130 TONS

GABC → 675 1 sq ft * .667 ft = 4502.9 ft³ / 27 = 166.77 yds³ ≈ 167 yds³

Ramp U

Roadway 28824 sq ft FULL DEPTH

Type C → 28824 sq ft / 9 SF/SY = 3202.67 sq yds / 14.17 = 226.02 TONS ≈ 226 TONS

Type B → 28824 sq ft / 9 SF/SY = 3202.67 sq yds / 7.86 = 407.46 TONS ≈ 407.5 TONS

BCBC → 28824 sq ft / 9 SF/SY = 3202.67 sq yds / 5.78 = 554.09 TONS ≈ 554 TONS

GABC → 28824 sq ft * .67 ft = 19312.08 ft³ / 27 = 715.26 yds³ ≈ 715.5 yds³

Ramp S

Roadway 8281 sq ft FULL DEPTH

Type C → 8281 sq ft / 9 SF/SY = 920.1 sq yds / 8.86 = 103.85 TONS ≈ 104 TONS

Type B → 8281 sq ft / 9 SF/SY = 920.1 sq yds / 7.86 = 116.62 TONS ≈ 116.5 TONS

BCBC → 8281 sq ft / 9 SF/SY = 920.1 sq yds / 5.78 = 159.19 TONS ≈ 159 TONS

GABC → 8281 sq ft * .67 ft = 5520.67 ft³ / 27 = 204.47 yds³ ≈ 204.5 yds³

Ramp R1

Roadway 22124 sq ft FULL DEPTH

Type C → 22124 sq ft / 9 SF/SY = 2458.22 sq yds / 14.17 = 173.48 TONS ≈ 173.5 TONS

Type B → 22124 sq ft / 9 SF/SY = 2458.22 sq yds / 7.86 = 312.75 TONS ≈ 313 TONS

BCBC → 22124 sq ft / 9 SF/SY = 2458.22 sq yds / 5.78 = 425.30 TONS ≈ 425.5 TONS

GABC → 22124 sq ft * .67 ft = 14749.33 sq Ft / 27 = 546.27 yds³ ≈ 546.5 yds³

Ramp R

Roadway 9054sqft FULL DEPTH

Type C → 9054 sqft/9SF/SY = 1006 sq yds/8.86 = 113.54 TONS ≈ 113.5 TONS

Type B → 9054 sqft/9SF/SY = 1006 sq yds/5.90 = 170.50 TONS

BCBC → 9054 sqft/9SF/SY = 1006 sq yds/5.78 = 174.05 TONS ≈ 174 TONS

GABC → 9054 sqft * .67ft = 6036 ft^3 /27 = 223.55 yds^3 ≈ 223.5 yds^3

Roadway 11083sqft MILL & OVERLAY

Type C → 11083sqft/9SF/SY = 1231.44 sq yds/8.86 = 138.98 TONS ≈ 139 TONS

Ramp G2

Roadway 6266 sqft FULL DEPTH

Type C → 6266sqft/9SF/SY = 696.22 sq yds/14.17 = 49.13 TONS ≈ 49 TONS

Type B → 6266sqft/9SF/SY = 696.22 sq yds/7.86 = 88.58 TONS ≈ 88.5 TONS

BCBC → 6266 sqft/9SF/SY = 696.22 sq yds/5.78 = 120.45 TONS ≈ 120.5 TONS

GABC → 6266sqft * .67ft = 4177.33 ft^3 /27 = 154.7 yds^3 ≈ 155 yds^3

Ramp G1

Roadway 72240 sqft FULL DEPTH

Type C → 72240sqft/9SF/SY = 8026.67 sq yds/8.86 = 905.94 TONS ≈ 906 TONS

Type B → 72240 sqft/9SF/SY = 8026.67 sq yds/5.90 = 1360.45 TONS ≈ 1360.5 TONS

BCBC → 72240sqft/9SF/SY = 8026.67 sq yds/5.78 = 1388.69 TONS ≈ 1389 TONS

GABC → 72240sqft * .67ft = 48160 ft^3 /27 = 1783.7 yds^3 ≈ 1784 yds^3

Ramp E1

Roadway 3040 sq ft FULL DEPTH

Type C → 3040 sq ft / 9 SF/SY = 337.77 sq yds / 11.81 = 28.60 TONS ≈ 28.5 TONS

Type B → 3040 sq ft / 9 SF/SY = 337.77 sq yds / 7.86 = 42.97 TONS ≈ 43 TONS

BCBC → 3040 sq ft / 9 SF/SY = 337.77 sq yds / 5.78 = 58.44 TONS ≈ 58.5 TONS

GABC → 3040 sq ft * .67 ft = 2026.67 ft^3 / 27 = 75.06 yds^3 ≈ 75 yds^3

Ramp E

Roadway → 45268 sq ft FULL DEPTH

Type C → 45268 sq ft / 9 SF/SY = 5029.77 sq yds / 11.81 = 425.89 TONS ≈ 426 TONS

Type B → 45268 sq ft / 9 SF/SY = 5029.77 sq yds / 7.86 = 639.92 TONS ≈ 640 TONS

BCBC → 45268 sq ft / 9 SF/SY = 5029.77 sq yds / 5.78 = 870.20 TONS ≈ 870 TONS

GABC → 45268 sq ft * .67 ft = 30178.67 ft^3 / 27 = 1117.73 yds^3 ≈ 1118 yds^3

Ramp D

Roadway 24489 sq ft MILL & OVERLAY

Type C → 24489 sq ft / 9 SF/SY = 2721 sq yds / 8.86 = 307.11 TONS ≈ 307 TONS

Ramp C1

Roadway 12347 sq ft FULL DEPTH

Type C → 12347 sq ft / 9 SF/SY = 1371.88 sq yds / 8.86 = 154.84 TONS ≈ 155 TONS

Type B → 12347 sq ft / 9 SF/SY = 1371.88 sq yds / 5.90 = 232.52 TONS ≈ 232.5 TONS

BCBC → 12347 sq ft / 9 SF/SY = 1371.88 sq yds / 5.78 = 237.35 TONS ≈ 237.5 TONS

GABC → 12347 sq ft * .67 ft = 8231.33 ft^3 / 27 = 304.87 yds^3 ≈ 305 yds^3

Ramp C

Roadway 32118 sqft FULL DEPTH

Type C -> 32118 sqft / 9 SF/SY = 3568.55 sq yds / 8.86 = 402.77 TONS ≈ 403 TONS

Type B -> 32118 sqft / 9 SF/SY = 3568.55 sq yds / 5.90 = 604.84 TONS ≈ 605 TONS

BC BC -> 32118 sq ft / 9 SF/SY = 3568.55 sq yds / 3.47 = 1028.4 TONS ≈ 1028.5 TONS

GABC -> 32118 sq ft * .67 ft = 21412 ft^3 / 27 = 793.04 yds^3 ≈ 793 yds^3

* because the depth of the type B is 6" and the chart only goes up to 3"

NB7

there will have to be two layers of the type B ∴ 2480 x 2 = 4960 TONS

Roadway 131691 sqft FULL DEPTH

Type C -> 131691 sqft / 9 SF/SY = 14632.33 sq yds / 8.86 = 1651.5 TONS

*Type B -> 131691 sqft / 9 SF/SY = 14632.33 sq yds / 5.90 = 2480 TONS (SEE NOTE ABOVE)

BCBC -> 131691 sqFt / 9 SF/SY = 14632.33 sq yds / 2.89 = 5063.09 TONS ≈ 5063 TONS

GABC -> 131691 sqFt * .75 = 98768.25 ft^3 / 27 = 3658.08 yds^3 ≈ 3658 yds^3

SR1

Roadway 14229 sq ft FULL DEPTH (PORTLAND CEMENT CONCRETE PAVEMENT 12")

Concrete -> 14229 sqft / 9 SF/SY = 1581 sq yds

GABC -> 14229 sqft * .67 ft = 9486 ft^3 / 27 = 351.33 yds^3 ≈ 351.5 yds^3

Ramp A

Roadway 155497 sqft FULL DEPTH (PORTLAND CEMENT CONCRETE PAVEMENT 12")

Concrete -> 155497 sqft / 9 SF/SY = 17277.44 sq yds ≈ 17277.5 sq yds

GABC -> 155497 sq ft * .67 ft = 103664.67 ft^3 / 27 = 3839.43 yds^3 ≈ 3839.5 yds^3

Ramp B

Roadway 114888 sq ft FULL DEPTH (PORTLAND CEMENT CONCRETE PAVEMENT 12")

Concrete → 114888 sq ft / 9 SF/SY = 12765.33 sq yds ≈ 12765.5 sq ft

GABC → 114888 sq ft * .67 ft = 76592 ft³ / 27 = 2836.74 yds³ ≈ 2837 yds³

Roadway 6731 sq ft MILL & OVERLAY

Type C → 6731 sq ft / 9 SF/SY = 747.88 sq yds / 8.86 = 84.41 TONS ≈ 84.5 TONS

SB7

Roadway 74454 sq ft MILL & OVERLAY

Type C → 74454 sq ft / 9 SF/SY = 8276 sq yds / 8.86 = 934.08 TONS ≈ 934 TONS

Roadway 6279 sq ft FULL DEPTH

Type C → 6279 sq ft / 9 SF/SY = 697.67 sq yds / 14.17 = 49.23 TONS ≈ 49 TONS

Type B → 6279 sq ft / 9 SF/SY = 697.67 sq yds / 7.86 = 88.76 TONS ≈ 89 TONS

BCBC → 6279 sq ft / 9 SF/SY = 697.67 sq yds / 5.78 = 120.70 TONS ≈ 121 TONS

GABC → 6279 sq ft * .67 ft = 4186 ft³ / 27 = 155.03 yds³ ≈ 155 yds³

Roadway 6973 sq ft FULL DEPTH (PORTLAND CEMENT CONCRETE PAVEMENT 12")

Concrete → 6973 sq ft / 9 SF/SY = 774.47 sq yds ≈ 774.5 sq yds

GABC → 6973 sq ft * .67 ft = 4648.67 Ft³ / 27 = 172.17 yds³ ≈ 172 yds³

I-95 Shifted

Roadway 36305 sq ft (FULL DEPTH)

TYPE C → 36305 sq ft / 9 SF/SY = 4033.89 sq yds / 8.86 = 455.29 TONS ≈ 455.5 TONS

TYPE B → 36305 sq ft / 9 SF/SY = 4033.89 sq yds / 5.90 = 683.7 TONS

* Because the depth of the type B is 9" and the max depth that layer can be is 3" it will need 3, 3" layers ∴ 683.7 × 3 = 2051.1 TONS ≈ 2051 TONS

BCBC → 36305 sq ft / 9 SF/SY = 4033.89 sq yds / 2.89 = 1395.8 TONS * Because the depth of BCBC is 12" & the max depth is 6" ∴ 1395.8 × 2 = 2791.6 TONS ≈ 2791.5 TONS

GABC → 36305 sq ft * 1 ft = 36305 ft³ / 27 = 1344.6 yds³ ≈ 1344.5 yds³

Ramp B1

Roadway 67736 FULL DEPTH (STA 500+00 TO STA 542+54.46)

Type C -> 67736 sq ft / 9 SF/SY = 7526.22 sq yds / 8.86 = 849.46 TONS ≈ 849.5 TONS

Type B -> 67736 sq ft / 9 SF/SY = 7526.22 sq yds / 7.86 = 957.53 TONS ≈ 957.5 TONS

*because the depth is 5.5" and the chart only goes up to 3" there will have to be two layers of type B @ 2.25" ∴ 957.5 × 2 = 1915 TONS

BCBC -> 67736 sq ft / 9 SF/SY = 7526.22 sq yds / 2.89 = 2604.23 TONS ≈ 2604.5 TONS

GABC -> 67736 sq ft * .67 = 45157.33 ft³ / 27 = 1672.49 yds³ ≈ 1672.5 yds³

Roadway 8668 sq ft FULL DEPTH (STA 542+54.46 TO STA 562+34.22)

Type C -> 8668 sq ft / 9 SF/SY = 963.11 sq yds / 8.86 = 108.7 TONS ≈ 109 TONS

Type B -> 8668 sq ft / 9 SF/SY = 963.11 sq yds / 5.90 = 163.24 TONS ≈ 163.5 TONS

because the depth is 6" and the chart only goes up to 3" there will have to be two layers of the type B @ 3" ∴ 163.5 × 2 = 327 TONS

BCBC -> 8668 sq ft / 9 SF/SY = 963.11 sq yds / 2.89 = 333.25 TONS ≈ 333.5 TONS

*because the depth is 12" and the chart only goes up to 6" there will have to be two layers of the BCBC @ 6" ∴ 3335 × 2 = 667 TONS

GABC -> 8668 sq ft * 1' = 8668 ft³ / 27 = 321.04 yds³ ≈ 321 yds³

I-95 Shifted

Roadway 116048 sq ft (MILL & OVERLAY)

Type C -> 116048 sq ft / 9 SF/SY = 12894.22 sq yds / 8.86 = 1455.32 TONS ≈ 1455.5 TONS

Ramp C1

Shoulder 10,688 sq ft (FULL DEPTH)

Type C → 10,688 sq ft / 9 SF/SY = 1187.55 / 8.86 = 134 TONS

Type B → 1187.55 / 5.90 = 201.2 TONS ≈ 201 TONS

BCBC → 118.755 / 5.78 = 205.5 TONS

GABC → 10688 sq ft × .67 ft = 7160.96 ft³ / 27 = 265.22 yds³ ≈ 265 yds³

Ramp E

Shoulder 34430 sq ft (FULL DEPTH)

Type C → 34430 sq ft / 9 SF/SY = 3825.55 / 11.81 = 323.92 TONS ≈ 324 TONS

Type B → 3825.55 / 7.86 = 486.7 TONS ≈ 487 TONS

BCBC → 3825.55 / 5.78 = 661.9 TONS ≈ 662 TONS

GABC → 34430 sq ft × .67 = 22953.33 / 27 = 850.12 yds³ ≈ 850 yds³

Ramp E1

Shoulder 2273 sq ft (FULL DEPTH)

Type C → 2273 sq ft / 9 SF/SY = 252.55 sq yds / 11.81 = 21.38 TONS ≈ 21.5 TONS

Type B → 252.55 sq yds / 7.86 = 32.13 TONS ≈ 32 TONS

BCBC → 252.55 sq yds / 5.78 = 43.69 TONS ≈ 44 TONS

GABC → 2273 sq ft × .67 ft = 1515.33 ft³ / 27 = 56.12 yds³ ≈ 56 yds³

Ramp G2

shoulder 4500 sq ft (FULL DEPTH)

Type C → 4500 sq ft / 9 SF/SY = 500 sq yds / 14.17 = 35.3 TONS ≈ 35.5 TONS

Type B → 500 sq yds / 7.86 = 63.6 TONS ≈ 63.5 TONS

BCBC → 500 sq yds / 5.78 = 86.5 TONS

GABC → 4500 sq ft × .67 ft = 3000 ft³ / 27 = 111.1 yds³ ≈ 111 yds³

Ramp R1

Shoulder 1077 sq ft (FULL DEPTH)

Type C → 1077 sq ft / 9 SF/SY = 119.67 sq yds / 8.86 = 13.5 TONS

Type B → 119.67 sq yds / 5.90 = 20.3 TONS ≈ 20.5 TONS

BC BC → 119.67 sq yds / 5.78 = 20.7 TONS ≈ 21 TONS

GABC → 1077 sq ft * .67 ft = 718 ft³ / 27 = 26.59 yds³ ≈ 26.5 yds³

Ramp S

Shoulder 5973 sq ft (FULL DEPTH)

Type C → 5973 sq Ft / 9 SF/SY = 663.67 sq yds / 8.86 = 74.9 TONS ≈ 75 TONS

Type B → 663.67 sq yds / 7.86 = 84.43 TONS ≈ 84.5 TONS

BC BC → 663.67 sq yds / 5.78 = 114.82 TONS ≈ 115 TONS

GABC → 5973 sq ft * .67 ft = 3982 ft³ / 27 = 147.48 yds³ ≈ 147.5 yds³

Ramp U

Shoulder 20939 sq ft (FULL DEPTH)

Type C → 20939 sq ft / 9 SF/SY = 2326.56 sq yds / 11.81 = 196.99 TONS ≈ 197 TONS

Type B → 2326.56 sq yds / 7.86 = 295.99 TONS ≈ 296 TONS

BC BC → 2326.56 sq yds / 5.78 = 402.5 TONS

GABC → 20939 sq ft * .67 = 13959.33 ft³ / 27 = 517 yds³

Ramp U1

Shoulder 5778 sq ft (FULL DEPTH)

Type C → 5778 sq ft / 9 SF/SY = 642 sq yds / 11.81 = 54.36 TONS ≈ 54.5 TONS

Type B → 642 sq yds / 7.86 = 81.68 TONS ≈ 82 TONS

BC BC → 642 sq yds / 5.78 = 111 TONS

GABC → 5778 sq ft * .67 ft = 3852 / 27 = 142.67 yds³ ≈ 143 yds³

S.C. Road

Shoulders 5234 sq ft (FULL DEPTH)

Type C -> 5234 sq ft / 9 SF/SY = 581.56 sq yds / 11.81 = 49.24 TONS ≈ 49.5 TONS

Type B -> 581.56 sq yds / 7.86 = 73.98 TONS ≈ 74 TONS

BCBC -> 581.56 sq yds / 5.78 = 100.6 TONS ≈ 100.5 TONS

GABC -> 5234 sq ft * .67 ft = 3489.33 ft³ / 27 = 129.23 yds³ ≈ 129 yds³

S.W. LOOP

Shoulder 7097 sq ft (FULL DEPTH)

Type C -> 7097 sq ft / 9 SF/SY = 788.56 sq yds / 8.86 = 89 TONS

Type B -> 788.56 sq yds / 5.70 = 138.34 TONS ≈ 138.5 TONS

BCBC -> 788.56 sq yds / 4.33 = 182.11 TONS ≈ 182 TONS

GABC -> 7097 sq ft * .67 ft = 4731.33 ft³ / 27 = 175.2 yds³ ≈ 175 yds³

SR1

Shoulder 7186 sq ft (FULL DEPTH)

CONCRETE -> 7186 sq ft / 9 SF/SY = 798.44 sq yds ≈ 798.5 sq yds

GABC -> 7186 sq ft * .67 ft = 4790.67 ft³ / 27 = 177.43 yds³ ≈ 177.5 yds³

NB7

Shoulder 70665 sq ft (FULL DEPTH)

Type C -> 70665 sq ft / 9 SF/SY = 7851.67 sq yds / 8.86 = 886.19 TONS ≈ 886 TONS

Type B -> 7851.67 sq yds / 5.90 = 1330.8 TONS ≈ 1331 TONS

because the depth of the type B layer is 6" & the chart only goes up to 3" there will have to be two layers of the type B @ 3" each ∴ 1331 x 2 = 2662 TONS

BCBC -> 7851.67 sq yds / 2.89 = 2716.84 TONS ≈ 2717 TONS

GABC -> 70665 sq ft * .75 ft = 52998.75 / 27 = 1962.91 yds³ ≈ 1963 yds³

Road A

Shoulder 3520 sqft (FULL DEPTH)

Type C → 3520 sqft/9 SF/SY = 391.1 sq yds/11.81 = 33.1 TONS ≈ 33 TONS

Type B → 391.1 sq yds/7.86 = 49.76 TONS ≈ 50 TONS

BC BC → 391.1 sq yds/5.78 = 67.67 TONS ≈ 68 TONS

GABC → 3520 sqft * .67ft = 2346.67 ft³/27 = 86.9 yds³ ≈ 87 yds³

Shoulder 1295 sqft (MILL & OVERLAY)

Type C → 1295 sqFt/9 SF/SY = 1439 sq yds/11.81

Ramp A

Shoulder 112149 (FULL DEPTH)

CONCRETE → 112149 sqft/9 SF/SY = 12461 sq yds

GABC → 112149 sqft * .67ft = 74766 ft³/27 = 2769.1 yds³ ≈ 2769 yds³

Ramp B

Shoulder 99517 sqft (FULL DEPTH)

CONCRETE → 99517 sqft/9 SF/SY = 11057.44 sq yds ≈ 11057.5 sq yds

GABC → 99517 sqft * .67ft = 66344.67 ft³/27 = 2457.2 yds³ ≈ 2457 yds³

Shoulder 4760 sqft (MILL & OVERLAY)

Type C → 4760 sqft/9 SF/SY = 528.88 sq yds/8.86 = 59.69 TONS ≈ 59.5 TONS

Ramp B1

Shoulder 90599 sqft (FULL DEPTH)

Type C → 90599 sqft/9 SF/SY = 10066.56 sq yds/8.86 = 1136.18 TONS ≈ 1136 TONS

Type B → 10066.56 sq yds/5.90 = 1706.19 TONS

Type B → 10066.56 sq yds/7.08 = 1421.18 TONS

→ 3127.37 TONS ≈ 3127.5 TONS

BC BC → 1060.56 sq yds/2.89 = 3483.23 TONS ≈ 3483 TONS

GABC → 90599 sqft * .67ft = 60399.33 ft³/27 = 2237 yds³

Ramp B1 (CONT...)

Shoulder 4473 sq ft (MILL & OVERLAY)

Type C → 4473 sq ft / 9 SF/SY = 497 sq yds / 8.86 = 56.09 TONS ≈ 56 TONS

Ramp D

Shoulder 5705 sq ft (FULL DEPTH)

Type C → 5705 sq ft / 9 SF/SY = 633.89 sq yds / 8.86 = 71.54 TONS ≈ 71.5 TONS

Type B → 633.89 sq yds / 7.09 = 89.53 TONS ≈ 89.5 TONS

Because the type B Hot-mix has a 5" depth the tons will be 89.5 x 2 = 179 TONS

BCBC → 633.89 sq yds / 4.33 = 146.39 TONS ≈ 146.5 TONS

Because the BCBC depth is 8" we will have two layers of BCBC @ 4" each 146.5 x 2 = 293 TONS

ABC → 5705 sq ft * .67 ft = 3803.33 ft³ / 27 = 140.86 yds³ ≈ 141 yds³

Shoulder 2386 sq ft (MILL & OVERLAY)

Type C → 2386 sq ft / 9 SF/SY = 265.11 sq yds / 8.86 = 29.92 TONS ≈ 30 TONS

Ramp G1

Shoulder 30856 sq ft (FULL DEPTH)

Type C → 30856 sq ft / 9 SF/SY = 3428.44 sq yds / 8.86 = 386.95 TONS ≈ 387 TONS

Type B → 3428.44 sq yds / 5.90 = 581.09 TONS ≈ 581 TONS

BCBC → 3428.44 sq yds / 5.78 = 593.15 TONS ≈ 593 TONS

GABC → 30856 sq ft * .67 ft = 2057.06 ft³ / 27 = 761.87 yds³ ≈ 762 yds³

Ramp C

Shoulder 26204 sq ft (FULL DEPTH)

Type C → 26204 sq ft / 9 SF/SY = 2911.56 sq yds / 8.86 = 328.61 TONS ≈ 328.5 TONS

Type B → 2911.56 sq yds / 5.90 = 493.48 TONS ≈ 493.5 TONS

BCBC → 2911.56 sq yds / 3.47 = 839.06 TONS ≈ 839 TONS

GABC → 26204 sq ft * .67 ft = 17469.33 ft³ / 27 = 647 yds³

Ramp R

Shoulder 5446 sq ft (FULL DEPTH)

Type C → 5446 sq ft / 9 SF/SY = 605.11 sq yds / 8.96 = 68.3 TONS ≈ 68.5 TONS

Type B → 605.11 sq yds / 5.90 = 102.56 TONS ≈ 102.5 TONS

BC BC → 605.11 sq yds / 5.78 = 104.69 TONS ≈ 105 TONS

GABC → 5446 sq ft * .67 ft = 3630.67 ft³ / 27 = 134.47 yds³ ≈ 134.5 yds³

Shoulder 8506 sq FL (MILL & OVERLAY)

Type C → 8506 sq ft / 9 SF/SY = 945.11 sq yds / 8.96 = 106.67 TONS ≈ 106.5 TONS

SB7

Shoulder 28880 sq ft (FULL DEPTH)

Type C → 28880 sq ft / 9 SF/SY = 3208.89 sq yds / 8.96 = 362.17 TONS ≈ 362 TONS

Type B → 3208.89 sq yds / 5.90 = 543.88 TONS ≈ 544 TONS

Because the type B Hot-mix has a 6" depth the tons will be 544 x 2 = 1080 TONS

BC BC → 3208.89 sq yds / 2.89 = 1110.34 TONS ≈ 1110.5 TONS

GABC → 28880 sq ft x .75 ft = 21660 ft³ / 27 = 802.22 yds³ ≈ 802 yds³

Shoulder 32720 sq ft (MILL & OVERLAY)

Type C → 32720 sq ft / 9 SF/SY = 3635.56 sq yds / 8.96 = 410.33 TONS ≈ 410.5 TONS

I-95

Shoulder 9575 (FULL DEPTH)

Type C → 9575 sq ft / 9 SF/SY = 1063.89 sq yds / 8.96 = 120.07 TONS ≈ 120 TONS

Type B → 1063.89 sq yds / 5.90 = 180.32 TONS ≈ 180.5 TONS

BC BC → 1063.89 sq yds / 2.89 = 368.13 TONS ≈ 368 TONS

GABC → 9575 sq ft * 1 ft = 9575 ft³ / 27 = 354.63 yds³ ≈ 354.5 yds³

I-95 Shifted

Shoulder 46859 sq ft (FULL DEPTH)

Type C → 46859 sq ft / 9 SF/SY = 5206.56 sq yds / 8.86 = 587.65 TONS ≈ 588 TONS

Type B → 5206.56 sq yds / 5.90 = 882.46 TONS ≈ 882.5 TONS

Because the type B HOT-mix has a 9" depth the tons will be 882.5 x 3 = 2647.5 TONS

BCBC → 5206.56 sq yds / 2.89 = 1801.58 TONS ≈ 1801.5 TONS

Because the BCBC has a depth of 12" the tons will be 1801.5 x 2 = 3603 TONS

GABC → 46859 sq ft * 1 ft = 46859 ft^3 / 27 = 1735.5 yds^3

Shoulder 32500 sq ft (MILL & OVERLAY)

Type C → 32500 sq ft / 9 SF/SY = 3611.11 sq yds / 8.86 = 407.57 TONS ≈ 407.5 TONS

BARRIER/GUARDRAIL & CURB QUANTITIES

Base Line	Stationing	Area of travel lane S.F. (full depth)	Area of shoulder (full depth)	Length of Barrier (LF)	Length of MSE Wall (LF)	Area of travel lane (mill and overlay) SF	Area of shoulder (mill and overlay) SF	720525 Barrier (LF)	720584 Barrier (LF)	720050 GR Barrier (LF)
I-95 Shift (NB)	Sta. 1700+00	36,305	46,859	5,338	–	116,048	32,500			
I-95 SB	Sta. 23+09.83	–	9,576	3,592	–	–	–			
NB7	Sta. 600+00	131,691	70,665	6,308	–	–	–			533
SB7	Sta. 1600+00	13,252	28,880	2,249	–	74,454	32,720			1580
Ramp A	Sta. 1200+00	153,805	112,149	8,745	1,692	8,165				
Ramp B	Sta. 400+00	114,888	99,517	8,765	1,976	6,731	4,760	165		
Ramp B1	Sta. 500+00	76,404	90,599	9,473	–	13,289	4,473			
Ramp C	Sta. 1100+00	32,118	26,204	1,490	384	–	–			
Ramp C1	Sta. 1800+00	12,347	10,688	257	–	–	–			472
Ramp D	Sta. 2100+00	–	5,706	–	–	24,489	2,386			
Ramp E	Sta. 900+00	45,268	34,430	2,833	–	–	–			1358
Ramp E1	Sta. 1000+00	3,040	2,273	–	–	–	–			
Ramp G1	Sta. 1300+00	72,240	30,856	998	990	–	–			226
Ramp G2	Sta. 1400+00	6,266	4,500	–	–	–	–			375
Ramp R	Sta. 1500+00	9,054	5,446	228	–	11,083	8,506			75
Ramp R1	Sta. 100+00	22,124	1,077	–	–	–	–			
Ramp S	Sta. 200+00	8,281	5,973	37	–	–	–			255
Ramp U	Sta. 700+00	28,824	20,939	995	–	–	–			740
Ramp U1	Sta. 800+00	6,751	5,778	–	–	–	–			56
Road A	Sta. 2200+00	545	3,520	–	–	61,653	12,951			322
S.C. Road	Sta. 2000+00	13,920	5,234	500	–	–	–			
SR1	Sta. 300+00	14,229	7,186	1,029	–	–	–			639
SWLoop	Sta. 1900+00	14,671	7,097	498	–	–	–		274	
Totals		816,023	635,152	53,335	5,042	315,912	98,296	165	274	6,631
						35,101 SY	10,922 SY			

Curb Quantities				
Baseline	701010 Curb Type 1 (LF)	701011 Curb Type 2 (LF)	701020 C&G Type 1 (LF)	701023 C&G Type 4 (LF)
Ramp E1	37	-	-	-
Ramp G1	-	-	1022	-
Ramp G1	-	963	-	-
Ramp R	-	212	-	-
Ramp R1	-	325	-	-
S.C. Road	625	-	-	-
S.W. Loop	-	-	-	956
Total	662	1500	1022	956

TOPSOIL/SEED/MULCH QUANTITIES

TOPSOIL, 6" DEPTH (732002) SY	PERMANENT GRASS SEEDING, DRY GROUND (734013) SY	PERMANENT CROWNVETCH SEEDING (734014) SY	SOIL RETENTION BLANKET MULCH, TYPE 3 (735533) SY	SOIL RETENTION BLANKET MULCH, TYPE 4 (735534) SY	SOIL RETENTION BLANKET MULCH, TYPE 5 (735535) SY
234	234	604	1039	234	318
220	220	1210	1812	220	202
906	906	1600	596	906	264
198	198	2505	148	198	317
684	684	3103	264	684	456
140	140	2725	1707	140	278
1133	1133	8579	320	1133	145
1610	1610	419	250	1610	38
40	40	910	1056	40	613
189	189	291	2537	189	93
62	62	983	2644	62	25
135	135	2554	1321	135	50
1550	1550	1688	725	1550	162
1107	1107	1422	203	1107	22
1094	1094	1100	2250	1094	17
726	726	-	238	726	40
278	278	-	133	278	96
963	963	-	5516	963	53
75	75	-	2090	75	47
580	580	-	208	580	41
165	165	-	482	165	118
86	86	-	93	86	1100
290	290	-	183	290	-
126	126	-	178	126	-
632	632	-	788	632	-
601	601	-	3296	601	-
176	176	-	84	176	-
1038	1038	-	152	1038	-
173	173	-	457	173	-
174	174	-	604	174	-
2433	2433	-	1210	2433	-

489	489	-	1600	489	-
382	382	-	2505	382	-
187	187	-	3103	187	-
131	131	-	2725	131	-
198	198	-	8579	198	-
814	814	-	419	814	-
264	264	-	910	264	-
80	80	-	291	80	-
344	344	-	983	344	-
1144	1144	-	2554	1144	-
1390	1390	-	1688	1390	-
798	798	-	1422	798	-
606	606	-	-	606	-
405	405	-	-	405	-
149	149	-	-	149	-
37	37	-	-	37	-
18	18	-	-	18	-
76	76	-	-	76	-
133	133	-	-	133	-
706	706	-	-	706	-
2206	2206	-	-	2206	-
224	224	-	-	224	-
124	124	-	-	124	-
1039	1039	-	-	-	-
1812	1812	-	-	-	-
596	596	-	-	-	-
148	148	-	-	-	-
264	264	-	-	-	-
1707	1707	-	-	-	-
320	320	-	-	-	-
250	250	-	-	-	-
1056	1056	-	-	-	-
2537	2537	-	-	-	-
2644	2644	-	-	-	-

1321	1321	-	-	-	-	-
725	725	-	-	-	-	-
203	203	-	-	-	-	-
2250	2250	-	-	-	-	-
238	238	-	-	-	-	-
133	133	-	-	-	-	-
5516	5516	-	-	-	-	-
2090	2090	-	-	-	-	-
208	208	-	-	-	-	-
482	482	-	-	-	-	-
93	93	-	-	-	-	-
183	183	-	-	-	-	-
178	178	-	-	-	-	-
788	788	-	-	-	-	-
3296	3296	-	-	-	-	-
84	84	-	-	-	-	-
152	152	-	-	-	-	-
457	457	-	-	-	-	-
318	318	-	-	-	-	-
202	202	-	-	-	-	-
264	264	-	-	-	-	-
317	317	-	-	-	-	-
456	456	-	-	-	-	-
278	278	-	-	-	-	-
145	145	-	-	-	-	-
38	38	-	-	-	-	-
613	613	-	-	-	-	-
93	93	-	-	-	-	-
25	25	-	-	-	-	-
50	50	-	-	-	-	-
162	162	-	-	-	-	-
22	22	-	-	-	-	-
17	17	-	-	-	-	-
40	40	-	-	-	-	-

96	96	-	-	-	-
53	53	-	-	-	-
47	47	-	-	-	-
41	41	-	-	-	-
118	118	-	-	-	-
62888	62888	29693	59363	28723	4495

RUMMEL, KLEPPER & KAHL, LLP

"A Tradition Of Excellence" since 1923

Subject TOP SOIL, SEED, & MULCH QUANITIES Page of

Cm. No.

Prepared By ZJS Date 4/23/09 Checked By Date

(H) 732002 → 62,788 sq yds

(I) 734013 → 62,788 sq yds

(L) 735534 → 28,723 sq yds

(K) 735533 → 59,363 sq yds

(M) 735535 → ~~1,100 sq yds~~ 4,495 sq yds

(J) 734014 → 29,693 sq yds

RUMMEL, KLEPPER & KAHL, LLP

"A Tradition Of Excellence" since 1923

Subject _____ Page _____ of _____

Cm. No. _____

Prepared By _____ Date _____ Checked By _____ Date _____

HIL

234	1038
220	173
906	174
198	2433
684	489
140	382
1133	187
1610	131
40	198
189	814
62	264
135	80
1550	344
1107	1144
1094	1390
726	798
278	606
963	405
75	149
580	37
165	18
86	76
290	133
26	706
632	2206
601	224
176	124

HIK

1039
1812
596
148
264
1707
320
250
1056
2537
2644
1321
725
203
2250
238
133
5516
2090
208
482
13
193
178
788
3296
84

HIM

152	318
457	202
	264
	317
	456
	278
	145
	38
	613
	93
	25
	50
	162
	22
	17
	40
	96
	53
	47
	41
	118

JK

604
1210
1600
2505
3103
2725
9579
419
910
291
983
2554
1688
1422

JM

1100

RUMMEL, KLEPPER & KAHL, LLP

"A Tradition Of Excellence" since 1923

Subject _____ Page ____ of ____

Cm. No. _____

Prepared By _____ Date _____ Checked By _____ Date _____

SW. Loop 450 x 31 = 13950 sq ft / 9 = 1550 sq yds HIL

SW Loop 450 x 5 = 2250 sq ft / 9 = 250 sq yds HIK

I-95 Shift 4743.82 x 21 = 9961.98 sq ft / 9 = 1107 sq yds HIL

I-95 Shift 820.5 x 12 = 9846 sq ft / 9 = 1094 sq yds HIL

Ramp A 594.3 x 16 = 9508.8 sq ft / 9 = 1056 sq yds HIK

Ramp A 594.3 x 4 = 2377.2 sq ft / 9 = 264 sq yds HIM

Ramp A 594.3 x 11 = 6537.3 sq ft / 9 = 726 sq yds HIL

Ramp A 358 x 7 = 2506 sq ft / 9 = 278 sq yds HIL

Ramp A 940 x 12 = 11280 sq ft / 9 ~~= 1392 sq yds HIC~~ 1253 sq yds HIL

Ramp B 990.27 x 11 = 10891.87 sq ft / 9 = 1210 sq yds JK

Ramp B 221.48 x 65 = 14396.2 sq ft / 9 = 1600 sq yds JK

Ramp B 713.5 x 32 = 22832 sq ft / 9 = 2537 sq yds HIK

Ramp B 713.5 x 4 = 2854 sq ft / 9 = 317 sq yds HIM

Ramp B1 410.34 x 58 = 23799.72 sq ft / 9 = 2644 sq yds HIK

Ramp B1 410.34 x 10 = 4103.4 sq ft / 9 = ~~456~~ 456 HIM

Ramp B1 626 x 19 = 11894.19 sq ft / 9 = 1321 sq yds HIK

Ramp B1 626 x 4 = 2504 sq ft / 9 = 279 sq yds HIM

Ramp B1 570.09 x 39 = 22543.51 / 9 = 2505 sq yds JK

Ramp B1 570.09 x 17 = 9691.53 / 9 = 963 sq yds HIL

Ramp B1 1994.49 x 14 = 27922.86 / 9 = 3103 sq yds JK

Ramp B1 645.53 x 38 = 24530.14 / 9 = 2725 sq yds JK

Ramp B1 1979.26 x 39 = 77210.64 / 9 = 8579 sq yds JK

Ramp B1 1979.26 x 5 = 9896.3 / 9 = ~~1099~~ 1100 sq yds JM

Ramp C 169.15 x 4 = 676.6 / 9 = 75 sq yds HIL

Ramp C 652.78 x 8 = 5222.24 / 9 = 580 sq yds HIL

Ramp C 652.78 x 10 = 6527.8 / 9 = 725 sq yds HIK

Ramp C 652.78 x 2 = 1305.56 / 9 = 145 sq yds HIM

RUMMEL, KLEPPER & KAHL, LLP

"A Tradition Of Excellence" since 1923

Subject _____ Page _____ of _____

Cm. No. _____

Prepared By _____ Date _____ Checked By _____ Date _____

Ramp C 114.58 x 13 = 1489.54/9 = 165 sq yds HIL

Ramp C 114.58 x 16 = 1833.28/9 = 203 sq yd HIK

Ramp C 40.53 x 19 = 770.07/9 = 86 sq yds HIL

Ramp C 326.55 x 8 = 2612.4/9 = 290 sq yds HIL

Ramp C 326.55 x 62 = 20246.1/9 = 2250 sq yds HIK

Ramp C 237.98 x 9 = 2140.92/9 = 238 sq yds HIK

Ramp C 159.65 x 6 = 1137.9/9 = 126 sq yds HIL

Ramp C1 117.92 x 32 = 3775.04/9 = 419 sq yds JK

Ramp C1 227.44 x 36 = 8187.84/9 = 900 sq yds JK

Ramp C1 227.44 x 25 = 5686/9 = 632 sq yds HIL

Ramp C1 174.42 x 71 = 5407.02/9 = 600 sq yd HIL

Ramp C1 174.42 x 15 = 2616.3/9 = 290 sq yds JK

Ramp C1 78.99 x 20 = 1579.8/9 = 176 sq yds HIL

Ramp E 268.13 x 33 = 8848.29/9 = 983 sq yds JK

Ramp E 718.42 x 32 = 22989.44/9 = 2554 sq yds JK

Ramp E 718.42 + 13 = 939.46/9 = 1038 sq yds HIK

Ramp E 85.62 x 14 = 1198.68/9 = 133 sq yds HIL

Ramp E 85.62 x 4 = 342.48/4 = 86 sq yds HIM

Ramp E 919.29 x 54 = 49646.66/9 = 5516 sq yds HIK

Ramp E 919.29 x 6 = ~~5534.80/9~~ 5515.74/9 = 613 sq yds HIM

Ramp E 418.11 x 45 = 18814.95/9 = 2090 sq yds. HIK

Ramp E 418.11 x 2 = 836.22/9 = 93 sq yds HIM

Ramp E 155.94 x 12 = 1871.28/9 = 208 sq yds HIK

Ramp E1 111.34 x 39 = 4342.26/9 = 482 sq yds HIK

Ramp E1 111.34 x 14 = 1558.76/9 = 173 sq yds HIL

Ramp E1 111.34 x 2 = 222.68/9 = 25 sq yds HIM

Ramp E1 86.84 x 18 = 1563.12/9 = 174 sq yds HIL

RUMMEL, KLEPPER & KAHL, LLP

"A Tradition Of Excellence" since 1923

Subject ..... Page ... of

Cm. No. ....

Prepared By ..... Date ..... Checked By ..... Date .....

~~Ramp G1 36425 x~~

Ramp G1 72334 x 21 = 15190.14/9 = 1688 sq yds JK

Ramp G1 226.45 x 60 = 13587/9 = ~~1508~~ 1510 sq yds HIL

Ramp G1 226.45 x 2 = 452.9/9 = 50 sq yds HIM

Ramp G1 365 x 60 = 21900/9 = 2433 sq yds HIL

Ramp G1 365 x 4 = 1460/9 = 162 sq yds HIM

Ramp G1 100.12 x 44 = 4405.28/9 = 489 sq yds HIL

Ramp G1 100.12 x 2 = 200.24/9 = 22 sq yds HIM

Ramp G1 74.88 x 46 = 3444.48/9 = 382 sq yds HIL

Ramp G1 74.88 x 2 = 149.76/9 = 17 sq yds HIM

Ramp G1 140 x 12 = 1680/9 = 187 sq yds HIL

Ramp G1 130.96 x 9 = 1178.64/9 = 131 sq yds HIL

Ramp G1 254.49 x 7 = 1781.43/9 = 198 sq yds HIL

Ramp G1 305.37 x 24 = 7328.88/9 = 814 sq yds HIL

Ramp G2 296.81 x 8 = 2374.48/9 = 264 sq yds HIL

Ramp G2 143.19 x 5 = 715.95/9 = 80 sq yds HIL

Ramp R 238.16 x 13 = 3096.08/9 = 344 sq yds HIL

Ramp R 180.6 x 57 = 10294.2/9 = 1144 sq yds HIL

Ramp R 180.6 x 2 = 361.2/9 = 40 sq yds HIM

Ramp R 431.24 x 29 = 12505.96/9 = 1390 sq yds HIL

Ramp R 431.24 x 2 = 862.48/9 = 96 sq yds HIM

Ramp R 239.36 x 30 = 7180.8/9 = 798 sq yds HIL

Ramp R 239.36 x 2 = 478.72/9 = 53 sq yds HIM

Ramp R 209.85 x 26 = 5456.1/9 = 606 sq yds HIL

Ramp R 209.85 x 4 = 839.4/9 = 93 sq yds HIK

Ramp R 209.85 x 2 = 419.7/9 = 47 sq yds HIM

Ramp R 191.75 x 19 = 3643.25/9 = 405 sq yds HIL

RUMMEL, KLEPPER & KAHL, LLP

"A Tradition Of Excellence" since 1923

Subject _____ Page _____ of _____

Cm. No. _____

Prepared By _____ Date _____ Checked By _____ Date _____

Ramp R1 149 x 9 = 1341/9 = 149 sq yds HIL

~~Ramp R1 149 x 36.71 x 9 = 330.39/9 = 36.71 sq yds~~

Ramp R1 36.71 x 9 = 330.39/9 = 37 sq yds HIL

Ramp S 80.19 x 2 = 160.38/9 = 18 sq yds HIL

Ramp S 274.13 x 25 = 6853.25/9 = 761 sq yds HIL

Ramp S 274.13 x 6 = 1644.78/9 = 183 sq yds HIK

Ramp S 200 x 8 = 1600/9 = 178 sq yds HIK

Ramp S 200 x 6 = 1200/9 = 133 sq yds HIL

Ramp U 186.68 x 38 = 7093.84/9 = 788 sq yds HIK

Ramp U 186.68 x 2 = 373.36/9 = 41 sq yds HIM

Ramp U 529.78 x 56 = 29667.68/9 = 3296 sq yds HIK

Ramp U 529.78 x 12 = 6357.36/9 = 706 sq yds HIL

Ramp U 529.79 x 2 = 1059.56/9 = 118 sq yds HIM

Ramp U 83.6 x 9 = 752.4/9 = 84 sq yds HIK

Ramp U1 274.61 x 5 = 1373.05/9 = 152 sq yds HIK

Ramp U1 473.94 x 27 = 12796.38/9 = 1422 sq yds JK

Ramp U1 381.86 x 52 = 19856.72/9 = 2206 sq yds HIL

Ramp U1 83.93 x 24 = 2014.32/9 = 224 sq yds HIL

SR1 224.43 x 5 = 1122.15/9 = 124 sq yds HIL

SR1 1028.91 x 4 = 4115.64/9 = 457 sq yds HIK

RUMMEL, KLEPPER & KAHL, LLP

"A Tradition Of Excellence" since 1923

Subject ..... Page ..... of .....

Cm. No. .....

Prepared By ..... Date ..... Checked By ..... Date .....

1 (H) 732002 - TOPSOIL 6" DEPTH (SY)
(I) 734013 - PERMANENT GRASS SEEDING, DRY GROUND (SY)
(K) 735533 - SOIL RETENTION BLANKET MULCH, TYPE 3 (SY)

~~SR1 360+75.57 → 373+28.91 (5' wide)~~

NB7 420.45ft × 5' = 2102.5sq ft/9 = 233.583 ≈ 234sq yds HIL

NB7 285.97ft × 19' = 5433sq ft/9 = 604sq yds JK

NB7 79.15 × 25' = 1978.75sq ft/9 = 220sq yds HIL

NB7 425.18 × 22' = 9353.96sq ft/9 = 1039 sq yds HIK

~~NB7 815.61 × 40' = 32624.4sq ft/9 = 3625sq yds~~

NB7 815.61 × 10 = 8156.1sq ft/9 = 906sq yds HIL

NB7 815.61 × 20 = 16312.2sq ft/9 = 1812sq yds HIK

NB7 1341.28 × 4' = 5365.12sq ft/9 = 596sq yds HIK

NB7 190.12 × 7' = 1330.84sq ft/9 = 148sq yds HIK

SB7 357.2 × 5' = 1786sq ft/9 = 198sq yds HIL

SB7 357.2 × 8' = 2857sq ft/9 = 318sq yds HIM

SB7 79.23 × 23' = 1822.29sq ft/9 = 202sq yds HIM

SB7 79.23 × 30' = 2376.9sq ft/9 = 264sq yds HIK

SB7 439.97 × 14' = 6159.58sq ft/9 = 684sq yds HIL

SB7 680.06 × 15' = 10200.9sq ft/9 = 1133.4sq yds HIL

SB7 140.46 × 9' = 1264.14sq ft/9 = 140sq yds HIL

SB7 529.78 × 29' = 15363.6sq ft/9 = 1707sq yds HIK

Road A 205.86 × 14' = 2882.04sq ft/9 = 320sq yds HIK

S.C. Road 499.76 × 29' = 14493sq ft/9 = 1610sq yds HIL

S. Road 60.07 × 6' = 360.42sq ft/9 = 40sq yds HIL

SW. Loop 154.52 × 11' = 1699.72sq ft/9 = ~~[illegible]~~ 189sq yds HIL

SW loop 93.51 × 6' = 561sq ft/9 = 62sq yds HIL

SW loop 63.11 × 13' = 1215.63sq ft/9 = 135sq yds HIL

LIGHTING QUANTITIES

Lighting Quantities - SR 1 Interchange

PRELIMINARY - 30%
Prepared by: AR Date: 4/24/2009

Item Number	Description	Unit	Total Quantity	Unit Cost	Total Cost
744525	Removal of Existing Junction Well	Each	15	$300.00	$4,500
--	Aluminum Lighting Standard with Single Davit Arm, 40' Pole	Each	54	$12,000.00	$648,000
--	Aluminum Lighting Standard with Twin Davit Arm, 40' Pole	Each	3	$13,700.00	$41,100
--	High Mast Lighting Pole and Foundation	Each	7	$36,000.00	$252,000
746537	Relocating Existing Light Standards	Each	2	$1,200.00	$2,400
746811	Removal of Lighting Pole with Mast Arm	Each	26	$700.00	$18,200
746876	Underpass Light Fixture	Each	12	$8,500.00	$102,000
--	Removal of High Mast Lighting Tower	Each	2	$3,000.00	$6,000
747500	Load Center Cabinet with Pad	Each	1	$15,000.00	$15,000
				TOTAL	**$1,089,200**

*1.2=

*Light pole unit costs have been inflated to include conduit, cable, pole, bases, junction wells, and all incidentals as preliminary design plans do not require design of these items

Assumptions:

High Mast - $20K/pole + 5*$1200/light + $10Kelectrical =	$36,000
Davit Arm Pole, Single - $3,500/pole + $1k found + $7500 electrical =	$12,000
Davit Arm Pole, Single - $5,200/pole + $1K found + $7500 electrical =	$13,700
Assume one new electrical cabinet (load center)	
Underpass Light - $1k each +$7500 Electrical =	$8,500

SIGNING/STRIPING
SIGNALS/ITS
QUANTITIES

RUMMEL, KLEPPER & KAHL, LLP
"A Tradition Of Excellence" since 1923

Subject SB1 / I-95 Interchange Page ____ of ____
Traffic Items 28-090-03 Cm. No. ____
Prepared By ____ Date ____ Checked By ____ Date ____

748015 - Permanent Pavement Striping, 4" Wide Thermoplastic, Symbol/Legend

SSC-1	0
SSC-2	0
SSC-3	0
SSC-4	32
SSC-5	124
SSC-6	210
SSC-7	42
SSC-8	0
SSC-9	0
SSC-10	0
SSC-11	-
SSC-12	-
SSC-13	-
SSC-14	-
SSC-15	-

408 SqY

425 S.F

@ $3.50 $1,487.50

RUMMEL, KLEPPER & KAHL, LLP
"A Tradition Of Excellence" since 1923

Subject SR 1/2-95 Interchange Page ____ of ____
Traffic Items 29-0910-03 Cm. No. ____
Prepared By ____ Date ____ Checked By ____ Date ____

748507 - Permanent Pavement Striping, Epoxy Resin Paint 6"

SSC-1	2,000
SSC-2	4,060
SSC-3	11,800
SSC-4	1,900
SSC-5	5,450
SSC-6	9,600
SSC-7	12,600
SSC-8	10,375
SSC-9	375
SSC-10	2,050
SSC-11	10,925
SSC-12	10,025
SSC-13	6,175
SSC-14	2,015
SSC-15	300

89,650 SCY

90,000 LF

@ $0.50 / LF

$45,000

RUMMEL, KLEPPER & KAHL, LLP

"A Tradition Of Excellence" since 1923

Subject: SR 117-95 Interchange Traffic items 28-090-03 Page ____ of ____ Cm. No. ____

Prepared By ____ Date ____ Checked By ____ Date ____

748509 - Permanent Pavement Striping, Epoxy Resin Paint, 12"

SSC-1	150
SSC-2	1250
SSC-3	1400
SSC-4	0
SSC-5	0
SSC-6	1,850
SSC-7	1,865
SSC-8	1,100
SSC-9	200
SSC-10	600
SSC-11	2,300
SSC-12	1,100
SSC-13	1,100
SSC-14	400
SSC-15	0

13315 Say

13,500 LF

@ $1.00/LF

$ 13,500

RUMMEL, KLEPPER & KAHL, LLP
"A Tradition Of Excellence" since 1923

Subject SR1/I-95 Interchange Page ____ of ____
Traffic Items 28-090-03 Cm. No. ____
Prepared By ____ Date ____ Checked By ____ Date ____

749500 - Extruded Sign Panel Overhead Type IX Sheeting

SSC-1	1,200
SSC-2	1,200
SSC-3	1,280
SSC-4	60
SSC-5	60
SSC-6	2,400
SSC-7	2,150
SSC-8	1,275
SSC-9	0
SSC-10	2,400
SSC-11	600
SSC-12	600
SSC-13	400
SSC-14	0
SSC-15	0

FOR PRELIMINARY COST. EST - USE THE FALAWING

OH SIGN STRUCTURES
9-NEW : $140,000/EA = $1,260,000
5 MODIFY : $50,000/EA = $150,000
$1,410,000

CANTILEVER SIGN STRUCTURES
1-NEW : $75,000 = $75,000
1-MODIFY $40,000 = $40,000
$115,000

BRIDGE MOUNTED SIGN STRUCTURE
4-NEW = (INCLUDED IN BRIDGE COST)
2-(MODIFY ROAD A) = $25,000 EA = $50,000

13,595
INCLUDED IN COST.
14,000 SF

749502 - Installation of Sign on/over Highway Structure

4 + 4 + 4 + 7 + 6 + 3 + 8 + 2 + 2 + 2 = 42 Ea

42 EA

RUMMEL, KLEPPER & KAHL, LLP

"A Tradition Of Excellence" since 1923

Subject SR1/I95 Interchange Page ____ of ____

Traffic Items 28.090.03 Cm. No. ____

Prepared By ____ Date ____ Checked By ____ Date ____

Reg / Warn / Special signs

30 @ 100.00 F&I

3,000 LS

INCLUDE IN PUM'T MARKINGS

RUMMEL, KLEPPER & KAHL, LLP
"A Tradition Of Excellence" since 1923

Subject SR 1/195 Interchange & Traffic Items 28.09.03 Page ____ of ____
Cm. No. ____
Prepared By ____ Date ____ Checked By ____ Date ____

ITMS

200 + 1150 + 1350 + 800 + 1300 + 900 + 1200 + 1000 + 1200 + 1400 + 1450 + 1450 + 1300

14,100 LF 4" say 15,000 LF @ 15.00
225,000

15,000 LF - JW4 over 600 FA = 25 JW4 @ 1,500 = 37,500
3 JW 7 @ 1,900 = 5,700

2 Cameras @ 70,000 ea
1 weather @ 50,000
Fiber $10.00 LF @ 15000

PART E

ABOVE LINE
COST = 257,472

Conduit	225,000
JW	43,200
Cable	150,000
Devices	190,000
	608,200
con.	121,640
	729,840

PART Q = 340,000

THIS INCLUDES
I. MISC. ITEMS (15%)
J. CONT. CONST. ENG. (5%)
K: INITIAL EXPENSE (5%)
REDUCE BY (25%) ABOVE THE LINE

Signal

ITMS $730,000 LS
USE: $585,000

3 @ 195,000 Ea

$ 585,000 Signal

USE: $470,000

PART E: USE 2/3
$ 314,900

PRELIMINARY ROADWAY SUBMITTAL
STRUCTURAL QUANTITY CALCULATIONS

SR1/I-95 INTERCHANGE

State Project No. 28-090-03
Federal Project No. IM-N056(35)

Prepared for:

DELAWARE DEPARTMENT OF TRANSPORTATION

VOLUME 1 of 1

April 2009

Prepared by:

RUMMEL, KLEPPER & KAHL, LLP
81 Mosher Street
Baltimore, Maryland 21217

URS Corporation
4 North Park Drive
Hunt Valley, Maryland 21030

Ramp A over I-95

URS

Page ____ of ____

Job I-95/SR 1 INTERCHANGE | Project No. 20832687 | Sheet ____ of ____

Description RAMP 'A' OVER I-95 | Computed by RFK | Date 1/12/09

PRELIMINARY PLANS QUANTITIES | Checked by ____ | Date ____

Reference

STEEL WEIGHT

GRADE 50W = $\frac{490}{144}(6)(1.15)\big(0.75(78)(809)+(1.5)(18)(114.5+114+108.5+116)$ ← DETAILS
(ITEM 602002)

$+(1.5)(20)(114.5+108.5)\big) = 1555436 \approx 1556000$ #

HPS 70W = $\frac{490}{144}(6)(1.15)\big(1.5(20)(114+116)+1.5(24)(2)(28.5+42)(2)+$
(ITEM 605691)

$+(1.5)(20)(2)(28+34)+(2.25)(24)(2)(50+50)+$

$+(2)(20)(2)(50)\big) = 839427 \approx 840000$ #

SUPSTR. CONCRETE (ITEM 602013)

$\frac{1}{27}(0.75)(56.875)(809+2(1.0))(1.05) = 1345 \approx 1350$ C.Y.

↑ HAUNCHES, OVERHANG, DIAPHRAGMS

PARAPET CONCRETE (ITEM 602015)

$\frac{1}{27}(2(3.45))(809+2(1.0)) = 207.3 \approx 210$ C.Y.

URS

Page ____ of ____

Job DELAWARE TURNPIKE | Project No. 20832687 | Sheet ____ of ____

Description SR.1 INTERCHANGE - RAMP 'A' | Computed by RFK | Date 8/27/08

Checked by ____ | Date ____

Reference

EPOXY REINFORCEMENT IN SUPSTR. (ITEM 602004)

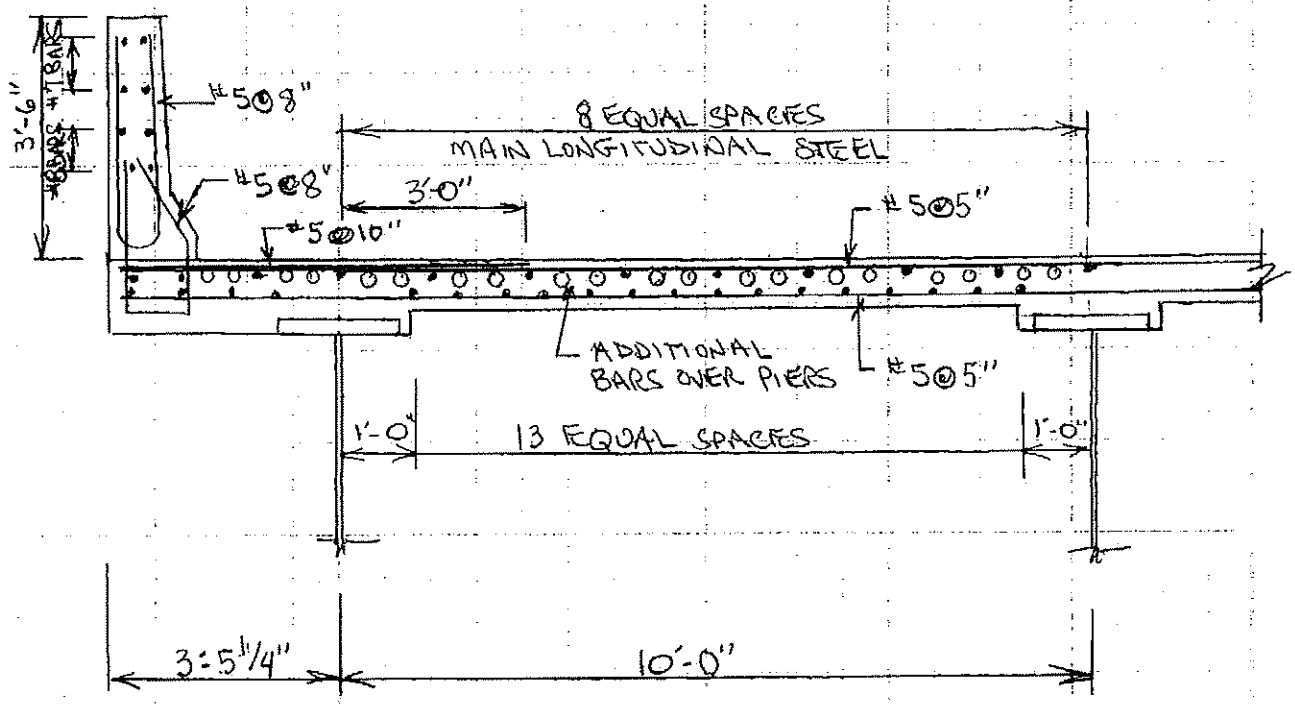

TYPICAL SLAB SECTION

TRANSVERSE SLAB BARS = $1.043(2)\left(\frac{12}{5}\right)(56.542) = 283.1$ plf

MAIN LONGITUDINAL BARS = $1.043((41+2(3)) + (14(5)+2(4))) = 130.4$ plf

(↑ TOP, ↑ BOTTOM)

ADDITIONAL BARS OVER PIERS = $1.043(16(5)+2(4)) = 91.8$ plf

TRANSVERSE PARAPET BARS = $1.043(7.0+6.0)\left(\frac{12}{8}\right)(2) = 40.7$ plf

LONGITUDINAL PARAPET BARS = $(2.044(4)+2.670(4))(2) = 37.7$ plf

TRANS. SLAB BAR AT OVERHANG = $1.043\left(\frac{12}{10}\right)(6.28)(2) = 15.7$ plf

URS

Job I-95/SR 1 INTERCHANGE | Project No. 20832687 | Page ____ of ____

Description RAMP 'A' OVER I-95 | Computed by RFK | Sheet ____ of ____

Checked by ____ | Date 8/27/08

Reference

SLAB EPOXY BARS = (283.1 + 130.4 + 15.7 + 40.7 + 37.7)(809 + 2(1.0))

+ 918(127.5 + 129.5 + 106) = 444987 (1.10) = 489486 #

misc. → ≈ 490000 #

URS

Page ____ of ____

Job DELAWARE TURNPIKE | Project No. 20832687 | Sheet ____ of ____

Description SR 1 INTERCHANGE - RAMP 'A' | Computed by RFK | Date 8/27/08

Checked by ____ | Date ____

Reference

INTEGRAL PIERS

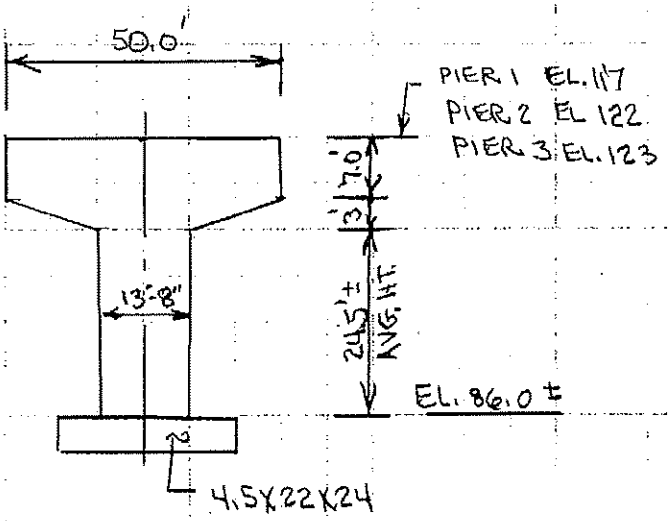

CAP ≈ 1/27 (5.0)(10.0(13.67) + 8.5(36.33)) = 82.5 ≈ 85 C.Y.

COLUMN ≈ 1/27((5)(13.67) - 4(1/2(1.0)(1.0)))(24.5) = 60.2 ≈ 161 C.Y.

FOOTING ≈ 1/27(4.5)(22)(24) = 88.0 C.Y.

CAP CONCRETE = 3(85.0) = 255 C.Y.

COLUMN CONCRETE = 3(61.0) = 183 C.Y.

FOOTING CONCRETE = 3(88.0) = 264 ≈ 265.0 C.Y. ITEM 602006

℄ 3 PIERS

PIPE PILE OPTION = 3(9)(120') = 3240'

URS

Job DELAWARE TURNPIKE | Project No. 20832687 | Page ____ of ____
Description SR. 1 INTERCHANGE - RAMP 'A' | Computed by RFK | Sheet ____ of ____
Checked by ____ | Date 8/27/08 | Date ____
Reference

ABUTMENTS

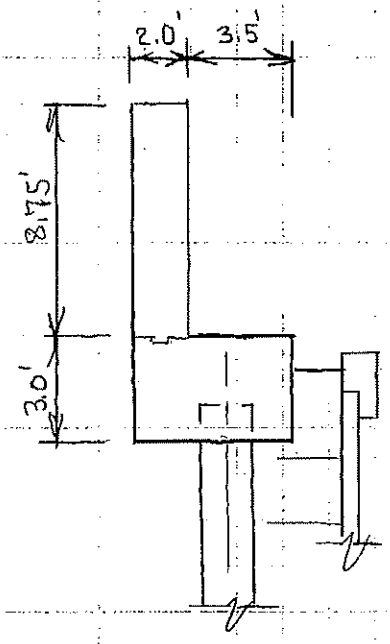

ITEM 602015

ABUTMENT CONCRETE ≈ 1/27 (2.0(8.75) + 3.0(5.50))(56.9)(2)

= 143.3 ≈ 145 C.Y.

EPOXY BARS IN ABUTMENT:

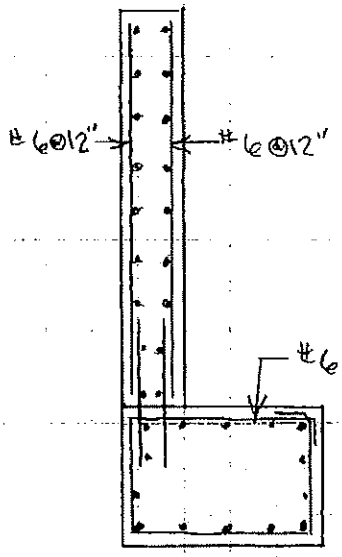

BACKWALL ≈ (1.043(2(9)) + 1.502(8.58)(2)(12/12))(56.88)

= 2534(2) = 5068 #

BEAM SEAT ≈ (1.043(14) + 1.502(16.33)(12/12) +

+ 1.502(3.25)(2)(12/12))(56.88)

= 2781 (2) = 5562 #

TOTAL EPOXY BARS IN ABUTMENT = 10630 ≈ 11,000 #

PILES:

PIPE PILE OPTION ≈ 6(2)(120) = 1440'

URS

Page ____ of ____

Job DELAWARE TURNPIKE | Project No. 20832687 | Sheet ____ of ____

Description SR1 INTERCHANGE - RAMP 'A' | Computed by RFK | Date 8/27/08

Checked by ____ | Date ____

Reference

MSE WALLS (ITEM 602553)

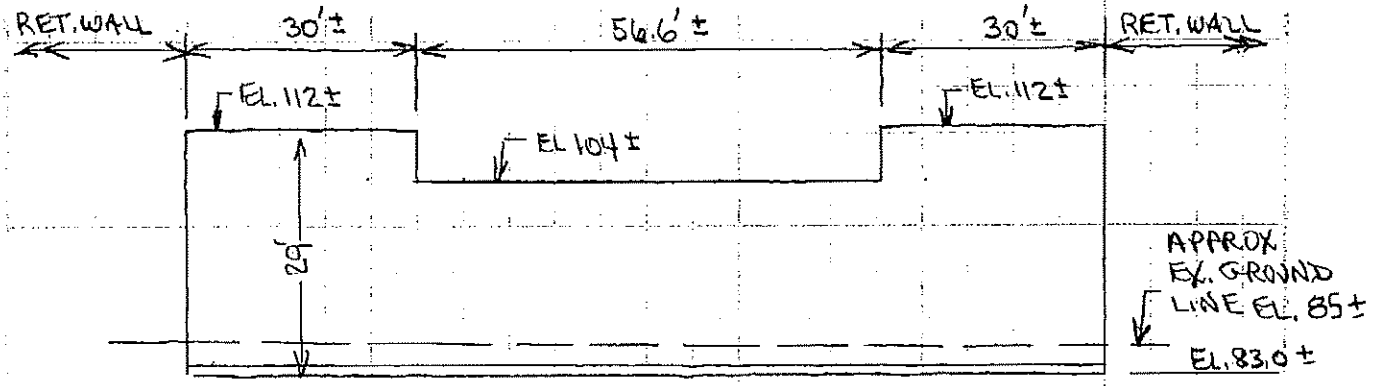

DEVELOPED ELEVATION AT ABUTMENT 'A'

WALL AREA AT ABUT. 'A' = $29(30)(2) + 21(56.6) = 2929\ FT^2$

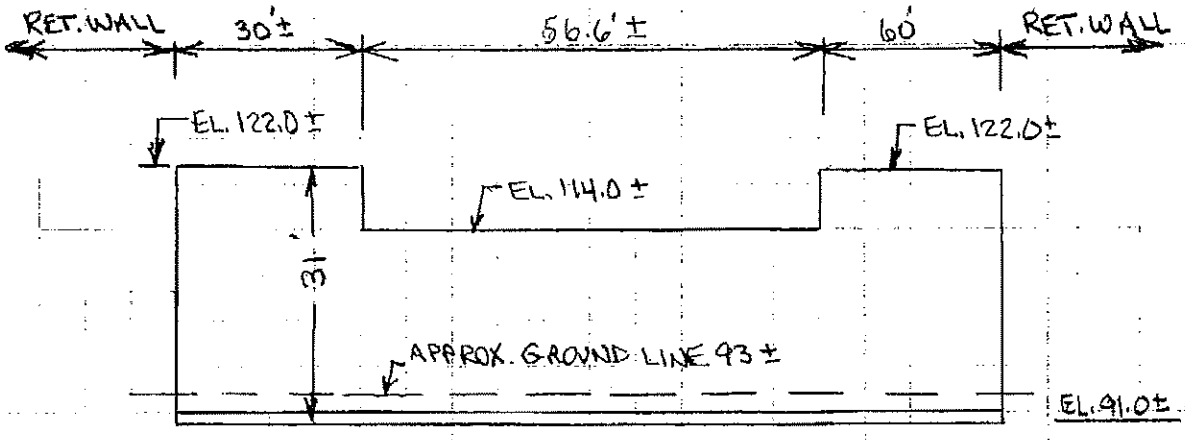

DEVELOPED ELEVATION AT ABUTMENT 'B'

WALL AREA AT ABUT. B = $(31.0)(30+60) + 23.0(56.6) = 4092\ FT^2$

TOTAL AREA MSE WALLS = 7021 ≈ 7100 SF

URS

Job DELAWARE TURNPIKE | Project No. 20832687 | Page ____ of ____
Description SR. 1 INTERCHANGE - RAMP 'A' | Computed by RFK | Date 8/27/08 | Sheet ____ of ____
Checked by ____ | Date ____ | Reference

PARAPET CONCRETE ON MSE WALLS:

$1/27(3.45(2(30)+90)) = 19.1 \approx 20.0$ C.Y.

(3.45 ↑ AREA)

EPOXY STEEL IN PARAPET CONCRETE ON MSE WALLS:

$(40.7+37.7)(2(30)+90.) = 11760 \approx 12000$ #

(40.7 + 37.7 ↑ SEE EPOXY BARS IN SUPSTR. CALC.)

APPROACH SLAB

ITEM 602009

CONCRETE (DEPTH, WIDTH, LEN.) $\approx 1/27(1.33(54.0)(20.0))(2) = 106.4 \sim 110$ C.Y.

EPOXY BARS:

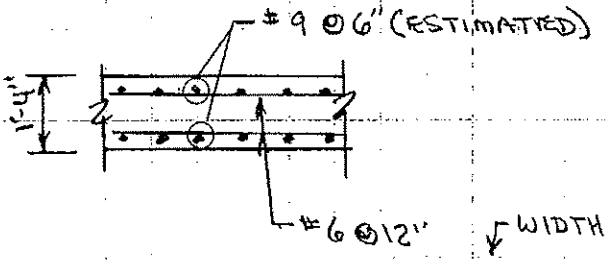

TRANS. BARS = $1.502(2)(54.0)(\frac{12}{12})(20.0)(2) = 6489$ # (2 ↑ TOP & BOT.; WIDTH; LEN.)

LONG. BARS = $3.400(2)(54(\frac{12}{6}))(20.0)(2)$ (2 ↑ BOTH ABUTMENTS)

$= 29376$ #

EPOXY BARS IN APPROACH SLAB = $35865 \approx 36000$ #

PRELIMINARY PLANS COST ESTIMATE
RAMP A OVER I-95
4 SPANS 168'-248'-215'-178' = 809'
CONCRETE INTEGRAL PIERS

URS

ITEM	QUANTITY	UNIT	UNIT PRICE	COST	
SUPSTR. STEEL - GRADE 50W	1556000	LB	$2.00	$3,112,000.00	605002
SUPSTR. STEEL - HPS-70W	840000	LB	$2.20	$1,848,000.00	605691
SUPERSTRUCTURE CONCRETE	1350	CY	$700.00	$945,000.00	605013
PARAPET CONCRETE	230	CY	$1,500.00	$345,000.00	605017
APPROACH SLAB CONCRETE	110	CY	$700.00	$77,000.00	605009
EPOXY COATED REINFORCEMENT	549000	LB	$1.20	$658,800.00	604000
MSE WALLS	7100	SF	$45.00	$319,500.00	602553
ABUTMENTS:					
SUBSTR. CONCRETE	145	CY	$700.00	$101,500.00	602015
PIPE PILES	1440	FT	$200.00	$288,000.00	
INTEGRAL PIERS:					
PIER CAP CONCRETE	255	CY	$1,200.00	$306,000.00	
PIER COLUMN CONCRETE	183	CY	$750.00	$137,250.00	
FOOTING CONCRETE	265	CY	$700.00	$185,500.00	602006
PIPE PILES	3240	FT	$200.00	$648,000.00	
SUBTOTAL				$8,971,550.00	
15% CONTINGENCY				$1,345,732.50	
TOTAL				$10,317,282.50	

Ramp A over SR 7

URS

Job I-95/SR.1 INTERCHANGE | Project No. 20832687.00000 | Page ____ of ____
Description RAMP 'A' OVER SR.7 | Computed by REK | Date 1/14/09 | Sheet ____ of ____
PRELIMINARY PLANS QUANTITIES | Checked by ____ | Date ____
Reference

STEEL WEIGHT ITEM 605002

SPANS = 106'-120'-140'-115' = 481'

WT. = $\frac{490}{144}(5)(1.15)(0.5625(54)(481)+(1.5)(16)(2)(80+56+76+81)$

$+2(1.75)(20)(57+61)+2(2.25)(20)(70))$ = 845923 ≈ 846000*

SUPSTR. CONCRETE ITEM 602013

$1/27(0.75)(44.875)(481+2(1.0))(1.05)$ = 632.2 ≈ 635 C.Y.

↑ HAUNCHES, DIAPHRAGMS OVERHANGS

PARAPET CONCRETE ITEM 602017

$1/27(2(3.45)(481+2(1.0)))$ = 123.4 ≈ 125 C.Y.

EPOXY REINFORCEMENT IN SUPSTR. ITEM 604000 (SEE RAMP 'A' OVER I-95 CALC.)

TRANSVERSE SLAB BARS = $1.043(2)(\frac{12}{5})(44.54/2)$ = 223.0 plf

TRANSVERSE SLAB BARS OVERHANG = $1.043(\frac{12}{10})(6.28)(2)$ = 15.7 plf

MAIN LONGITUDINAL BARS = $1.043((33+2(3))+(14)(4)+2(4))$ = 107.4 plf

↑ TOP ↑ BOT

ADDITIONAL BARS OVER PIERS = $1.043(16(4)+2(4))$ = 75.1 plf

URS

Job I-95/SR 1 INTERCHANGE | Project No. 20832687 | Page ____ of ____
Description RAMP 'A' OVER SR 4 | Computed by RFK | Date 8/25/08 | Sheet ____ of ____
Checked by ____ | Date ____ | Reference

TRANSVERSE PARAPET BARS = $1.043(7.0+6.10)\left(\frac{12}{8}\right)(2) = 40.7$ plf

LONGITUDINAL PARAPET BARS = $(2.044(4)+2.670(4))(2) = 37.7$ plf

SUPSTR. EPOXY BARS = $(223.0+15.7+107.4+40.7+37.7)(481+2(1.0))+$

$+75.1(58+61+66)$

$= 218927(1.10) = 240820 \approx \underline{241,000}$

↑ misc

URS

Page ____ of ____

Job I-95/SR.1 INTERCHANGE | Project No. 20832687 | Sheet ____ of ____

Description RAMP 'A' OVER SR.7 | Computed by RFK | Date 1/14/09

PRELIMINARY PLANS QUANTITIES | Checked by ____ | Date ____

Reference

HAMMERHEAD PIERS (PIERS 1 & 3)

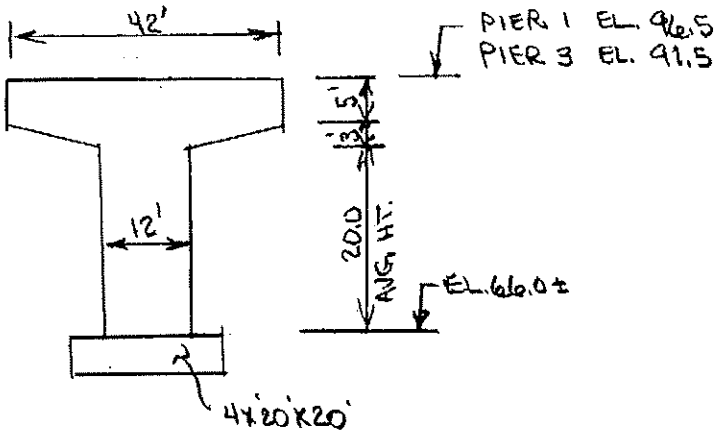

2 PIERS

CAP = 1/27(5.0)(8.0(12) + 2(6.5)(15.0)) = 53.9 ≈ 54(2) = 108 C.Y.

COLUMN = 1/27(5)(12)(20.0) = 44.4 ≈ 45(2) = 90 C.Y.

FOOTING = 1/27(4)(20)(20) = 59.3 ≈ 60(2) = 120 C.Y. ITEM 602006

PIPE PILES = 2(9)(120) = 2160'

URS

Job I-95/SR 1 INTERCHANGE Project No. 20832687 Page ____ of ____

Description RAMP 'A' OVER SR 7 Computed by RFK Date 1/14/09 Sheet ____ of ____

Checked by ____ Date ____

Reference

POST-TENSIONED PIER CAP (PIER 2)

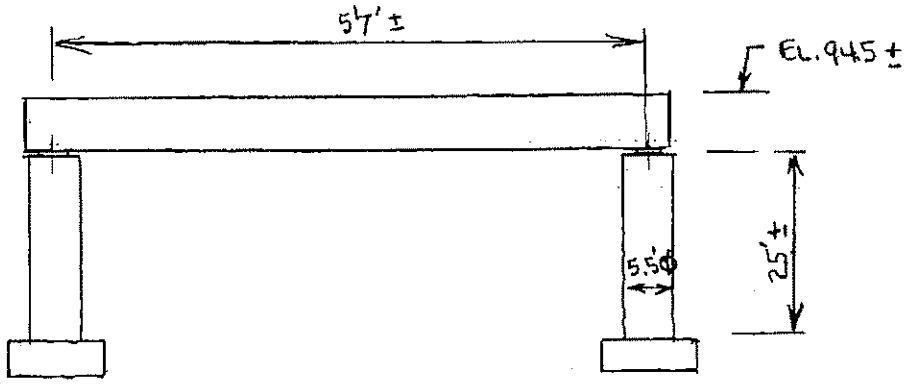

CAP = 1/27(6)(6.5)(57.0+2(2.0)) = 88.1 ≈ 90 C.Y.

COLUMNS = 1/27(2)($\frac{\pi}{4}$)(5.5)^2(25.0) = 44 C.Y.

FOOTINGS = 2(1/27)(4)(15)(15) = 66.7 ≈ 70 C.Y. ITEM 602006

PIPEPILES = 2(6)(120) = 1440'

URS

Page ____ of ____

Job I-95/SR 1 INTERCHANGE | Project No. 20832687 | Sheet ____ of ____

Description RAMP 'A' OVER SR 7 | Computed by REK | Date 8/25/08

Checked by ____ | Date ____

Reference

ABUTMENTS

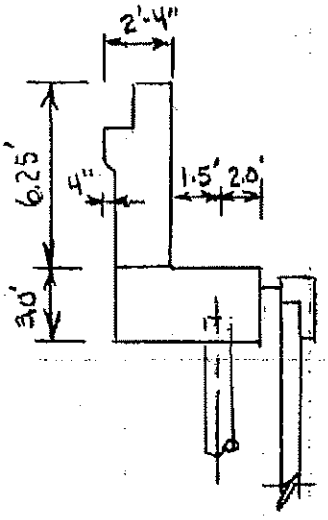

ITEM 602015

CONCRETE = $\frac{1}{27}(2.0(6.25)+3.0(5.50))(44.88)(2)$

= 96.4 ≈ 100 CY.

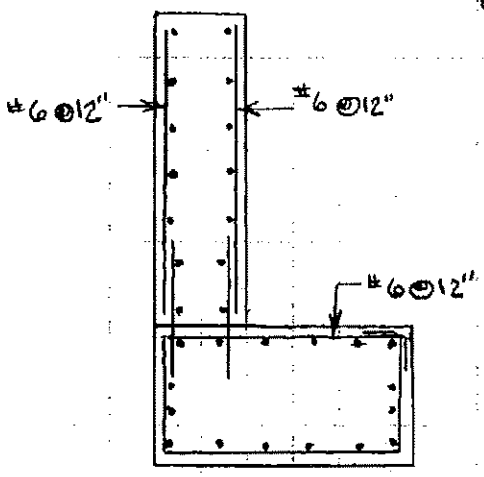

EPOXY BARS IN ABUTMENT:

BACKWALL = $(1.043(2(7))+1.502(6.08)(2)(\frac{12}{12}))(44.88)$

= 1475 (2) = 2950#

BEAM SEAT = $(1.043(16)+1.502(18.33)(\frac{12}{12})+$

$+1.502(3.25)(2)(\frac{12}{12}))(44.88)$

= 2423 (2) = 4846#

TOTAL EPOXY BARS IN ABUTMENT = 7796 ≈ 7900#

PILES:

PIPE PILES = 5(2)(120) = 1200'

URS

Page ____ of ____

Job I-95/SR1 INTERCHANGE | Project No. 20832687. | Sheet ____ of ____

Description RAMP 'A' OVER SR 7 | Computed by RFK | Date 8/25/08

Checked by ____ | Date ____

Reference

MSE WALLS ITEM 602553

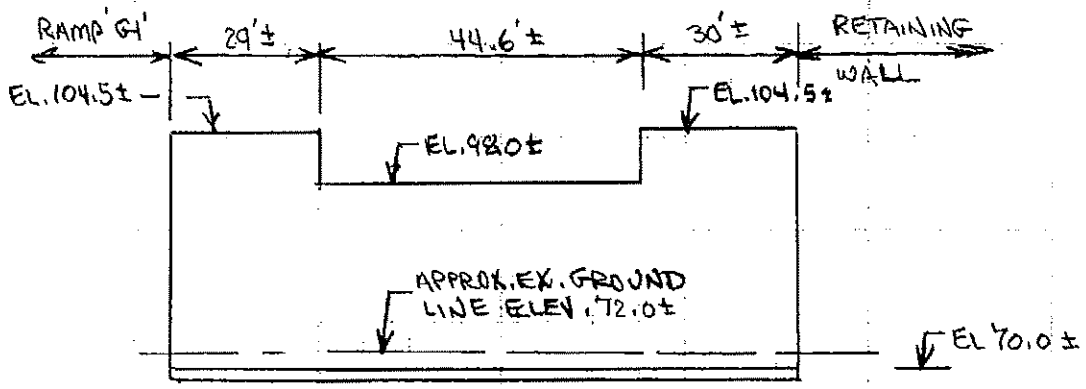

DEVELOPED ELEVATION AT ABUTMENT 'A'

WALL AREA
AT ABUT. 'A' = 30(34.5) + 44.6(28.0) + 29(34.5) = 3284.3 FT²

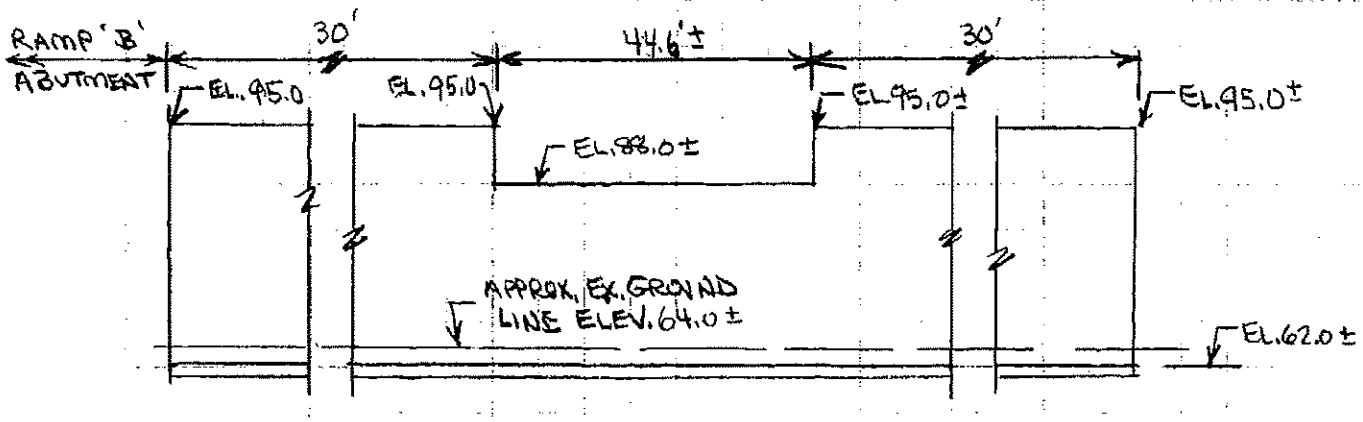

DEVELOPED ELEVATION AT ABUTMENT 'B'

WALL AREA
AT ABUT. 'B' = 44.6(26.0) + (30+30)(33.0) = 3140.0 FT²

TOTAL MSE WALL AREA = 6424 ≈ 6500 FT²

URS

Job I-95/SR1 INTERCHANGE | Project No. 20832687 | Page ____ of ____
Description RAMP 'A' OVER SR 7 | Computed by REK | Sheet ____ of ____
Checked by ____ | Date 8/25/08 | Date ____
Reference

PARAPET CONCRETE ON MSE WALLS:

$1/27(3.145)(30+30+30+29) = 19.0 \approx 20$ C.Y.

↑ AREA

EPOXY STEEL IN PARAPET CONCRETE ON MSE WALLS:

$(40.7+37.7)(30+30+30+29) = 9330 \approx 9500$ #

↑ SEE EPOXY BARS IN SUPSTR. CALC.

APPROACH SLAB

CONCRETE $\approx 1/27(1.33(42.0)(20.0))(2) = 83 \approx 85$ C.Y.

(WIDTH; DEPTH; LEN.; ITEM 602009)

EPOXY BARS:

TRANS. BARS $= 1.502(2)(42.0)(\frac{12}{12})(20.0)(2) = 5047$ #

↕ SEE RAMP 'A' OVER I-95

LONG. BARS $= 3.400(2)(42.0(\frac{12}{6}))(20.0)(2) = 22848$ #

EPOXY BARS IN APPROACH SLAB $= 27895 \approx 28{,}000$ #

PRELIMINARY PLANS COST ESTIMATE
RAMP A OVER SR 7
4 SPANS 106'-120'-140'-115' = 481'
PIER 1 & 3 - HAMMERHEAD PIER &
PIER 2 - POST-TENSIONED PIER CAP

URS

ITEM	QUANTITY	UNIT	UNIT PRICE	COST	
SUPERSTRUCTURE STEEL	846000	LB	$2.00	$1,692,000.00	605002
SUPERSTRUCTURE CONCRETE	635	CY	$700.00	$444,500.00	602013
PARAPET CONCRETE	145	CY	$1,500.00	$217,500.00	602017
APPROACH SLAB CONCRETE	85	CY	$700.00	$59,500.00	602009
EPOXY COATED REINFORCEMENT	286400	LB	$1.20	$343,680.00	604000
MSE WALLS	6500	SF	$45.00	$292,500.00	602553
ABUTMENTS:					
SUBSTR. CONCRETE	100	CY	$700.00	$70,000.00	602015
PIPE PILES	1200	FT	$200.00	$240,000.00	
HAMMERHEAD PIERS (PIERS 1 & 3):					
PIER CAP CONCRETE	108	CY	$750.00	$81,000.00	
PIER COLUMN CONCRETE	90	CY	$750.00	$67,500.00	
FOOTING CONCRETE	120	CY	$700.00	$84,000.00	602006
PIPE PILES	2160	FT	$200.00	$432,000.00	
POST-TENSIONED PIER (PIER 2):					
POST-TENSIONED CAP CONC.	90	CY	$1,500.00	$135,000.00	
BEARINGS	2	EA	$10,000.00	$20,000.00	
PIER COLUMN CONCRETE	44	CY	$750.00	$33,000.00	
FOOTING CONCRETE	70	CY	$700.00	$49,000.00	602006
PIPE PILES	1440	FT	$200.00	$288,000.00	
SUBTOTAL				$4,549,180.00	
15% CONTINGENCY				$682,377.00	
TOTAL				$5,231,557.00	

Ramp B over SR 7

STEEL WEIGHT (ITEM 605002) LUMP SUM

$$WT. = \frac{490}{144}(2)(1.15)\left(0.6875(72)(365) + (1.5)(18) + 2(20)\right)(123.5(2)) +$$
$$+ 2(24)(2)(34(2)) + 2(24)(3)(50)) + \frac{490}{144}(4)(1.15)(0.6875(72)(365) +$$
$$+ (1.5(18) + 1.75(20))(123.5(2)) + 2(1.75)(24)(34(2)) + 2(2.75)(24)(50)) =$$

1093593 ≈ 1094000 #

SUPSTR. CONCRETE (ITEM 602013)

$$1/27(0.75)(44.875)(365.0 + 2(1.0))(1.05) = 480.3 \approx \underline{482 \text{ CY.}}$$

↑ HAUNCHES, OVERHANGS, END DIAPHRAGMS

PARAPET CONCRETE (ITEM 602017)

$$1/27(2(3.45))(365 + 2(1.0)) = 93.8 \approx \underline{95 \text{ CY.}}$$

↑ AREA

EPOXY REINFORCEMENT IN SUPSTR. (ITEM 604000)

TRANSVERSE SLAB BARS $= 1.043(2)\left(\frac{12}{5}\right)(44.54) = 223.0$ plf

TRANSVERSE SLAB BARS AT OVERHANG $= 1.043\left(\frac{12}{10}\right)(5.77)(2) = 14.4$ plf

MAIN LONGITUDINAL BARS $= 1.043((33 + 2(3)) + (14(4) + 2(4))) = 107.4$ plf

↑ TOP ↑ BOTTOM

ADDITIONAL BARS OVER PIERS $= 1.043(16(4) + 2(4)) = 75.1$ plf

URS

Job I-95/SR1 INTERCHANGE Project No. 20832687 Page ____ of ____

Description RAMP 'B' OVER SR7 Computed by RFK Date 9/2/08 Sheet ____ of ____

PRELIMINARY PLANS QUANTITIES Checked by ____ Date ____

Reference

TRANSVERSE PARAPET BARS = $1.043(7.0+6.0)\left(\frac{12}{8}\right)(2) = 40.7$ plf

LONGITUDINAL PARAPET BARS = $(2.044(4)+2.670(4))(2) = 37.7$ plf

SLAB EPOXY BARS = $(223.0+14.4+107.4+40.7+37.7)(365+2(1.0))$

$+ 75.1(120) = 164326\ (1.10) = 180759$

MISC. $\approx$ 181,000#

URS

Page ____ of ____

Job I-95/SR1 INTERCHANGE | Project No. 20832687 | Sheet ____ of ____

Description RAMP 'B' OVER SR 7 | Computed by RFVC | Date 1/14/09

PRELIMINARY PLANS QUANTITIES | Checked by ____ | Date ____

Reference

POST-TENSIONED PIER CAP

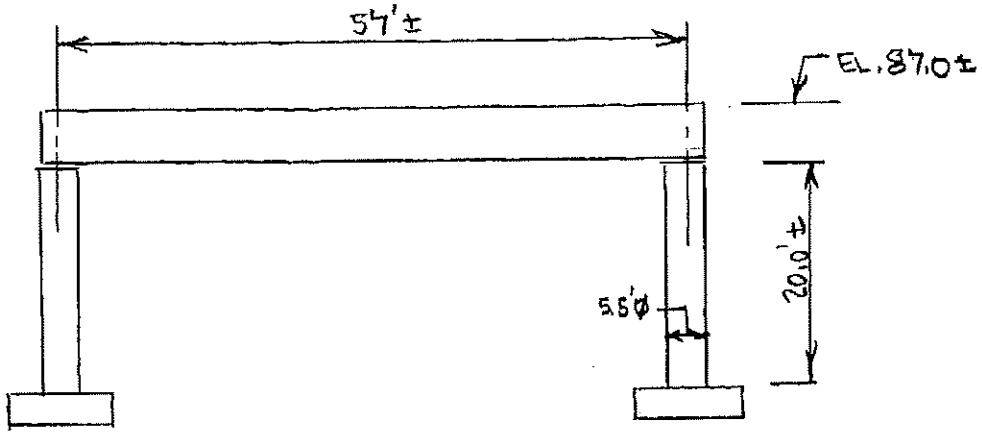

CAP = 1/27(6)(6.5)(54+2(2)) = 88.1 ≈ 90 C.Y. ITEM

COLUMNS = 1/27(2)($\frac{\pi}{4}$(5.5)^2)(20.0) = 35.2 ≈ 36 C.Y. ITEM 602007

FOOTINGS = 2(1/27)(4)(15)(15) = 66.7 ≈ 70 C.Y. ITEM 602006

PIPE PILES = 2(6)(120) = 1440' ITEM

URS

Job I-95/SR.1 INTERCHANGE | Project No. 20832687 | Page ____ of ____
Description RAMP 'B' OVER SR.7 | Computed by RFK | Sheet ____ of ____
PRELIMINARY PLANS QUANTITIES | Checked by ____ | Date 9/2/08
Reference

ABUTMENTS

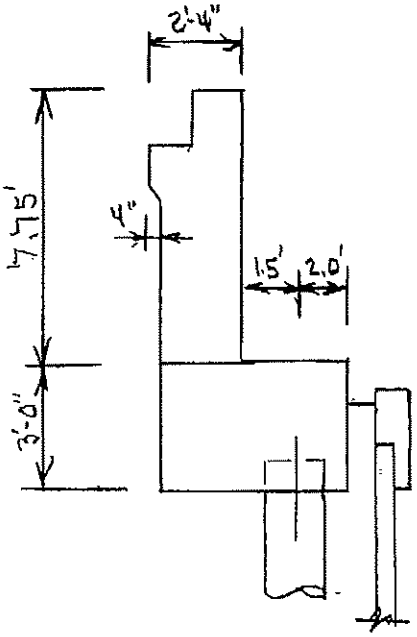

ITEM 602015

CONCRETE = 1/27(2.0(7.75) + 3.0(5.5))(44.88)(2)

= 106.4 ≈ 110 C.Y.

EPOXY BARS IN ABUTMENT:

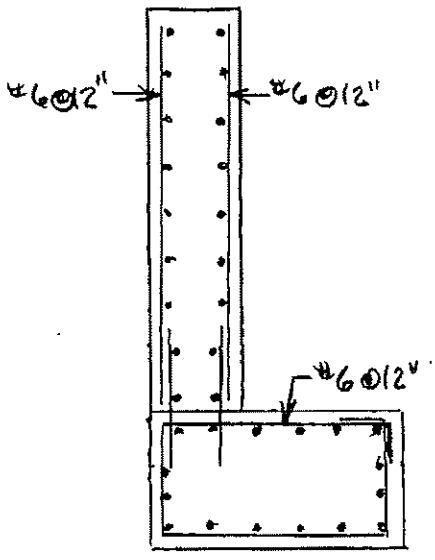

BACKWALL ≈ (1.043(2)(9) + 1.502(7.58)(2)(12/12))(44.9)

= 1865(2) ≈ 3731 #

BEAM SEAT ≈ (1.043(16) + 1.502(16.33)(12/12) +

+ 1.502(3.25)(2)(12/12))(44.9)

= 2289(2) = 4578 #

TOTAL EPOXY BARS IN ABUTMENT = 8309 ≈ 8500 #

PILES: PIPE PILES = 5(2)(120) = 1200'

URS

Page ____ of ____

Job I-95/SR 1 INTERCHANGE | Project No. 20832687 | Sheet ____ of ____

Description RAMP 'B' OVER SR 1 | Computed by RFK | Date 9/2/08

PRELIMINARY PLANS QUANTITIES | Checked by ____ | Date ____

Reference

MSE WALLS ITEM 602553

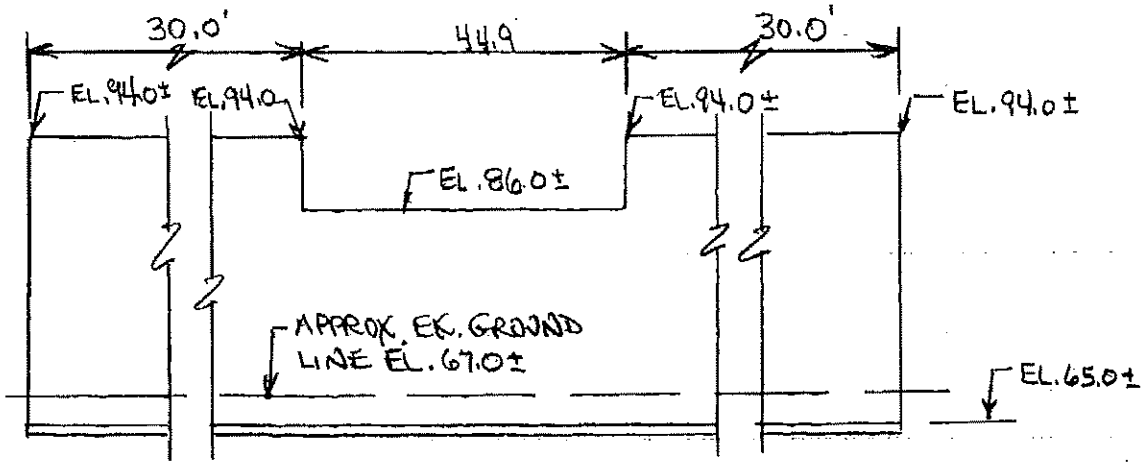

DEVELOPED ELEVATION AT ABUTMENT 'A'

WALL AREA AT ABUT. 'A' = 29.0(30+30)+21.0(44.9) = 2683 FT²

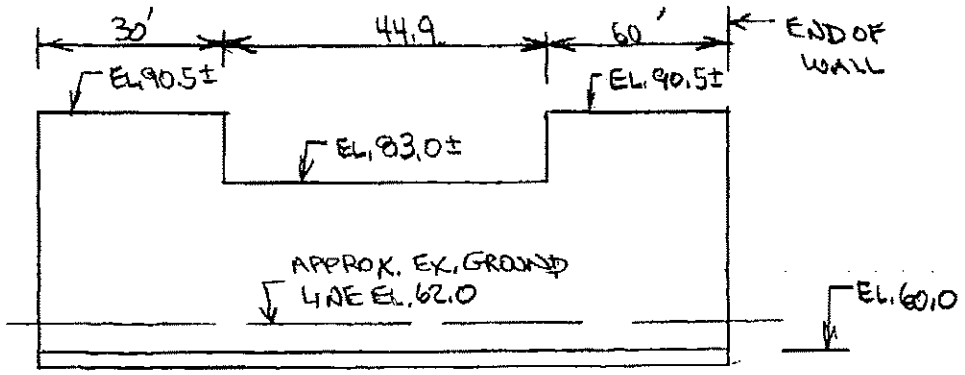

DEVELOPED ELEVATION AT ABUTMENT 'B'

WALL AREA AT ABUT. 'B' = 30.5(30+60)+23.0(44.9) = 3778 FT²

TOTAL MSE WALL AREA ≈ 6461 ≈ 6500 FT²

PARAPET CONCRETE ON MSE WALLS:

$1/27(3.45)(3.0 + 60 + 2(30)) \simeq$ 20.0 C.Y.

↳ AREA

EPOXY STEEL IN PARAPET CONCRETE ON MSE WALLS:

$(40.7+37.7)(30+60+2(30)) = 117{,}600 \simeq 12000^{\#}$

↳ SEE EPOXY BARS IN SUPSTR. CALC.

APPROACH SLAB

ITEM 602009

CONCRETE = $1/27(1.33)(42.0)(20)(2) = 82.8 \simeq$ 83.5 C.Y.

(1.33: DEPTH; 42.0: WIDTH; 20: LEN.)

EPOXY BARS:

TRANS. BARS: $1.502(2)(42.0)\left(\frac{12}{12}\right)(20)(2) = 5047^{\#}$

LONG. BARS = $3.400(2)(42.0\left(\frac{12}{6}\right))(20)(2) = 22848^{\#}$

EPOXY BARS IN APPROACH SLAB = $27895 \simeq 30000^{\#}$

PRELIMINARY PLANS COST ESTIMATE
RAMP B OVER SR 7
2 SPANS 182.5'-182.5' = 365'
POST-TENSIONED PIER CAP

URS

ITEM	QUANTITY	UNIT	UNIT PRICE	COST	ITEM No.
SUPERSTRUCTURE STEEL	1094000	LB	$2.00	$2,188,000.00	605002 -LS
SUPERSTRUCTURE CONCRETE	482	CY	$700.00	$337,400.00	602013
PARAPET CONCRETE	115	CY	$1,500.00	$172,500.00	602017
APPROACH SLAB CONCRETE	85	CY	$700.00	$59,500.00	602009
EPOXY COATED REINFORCEMENT	231500	LB	$1.20	$277,800.00	604000
MSE WALLS	6500	SF	$45.00	$292,500.00	602553
ABUTMENTS:					
SUBSTR. CONCRETE	110	CY	$700.00	$77,000.00	602015
PIPE PILES	1200	FT	$200.00	$240,000.00	
POST TENSIONED PIER:					
POST-TENSIONED CAP CONC.	90	CY	$1,500.00	$135,000.00	
BEARINGS	2	EA	$10,000.00	$20,000.00	
PIER COLUMN CONCRETE.	36	CY	$750.00	$27,000.00	= 602007
FOOTING CONCRETE	70	CY	$700.00	$49,000.00	602006
PIPE PILES	1440	FT	$200.00	$288,000.00	
SUBTOTAL				$4,163,700.00	
15% CONTINGENCY				$624,555.00	
TOTAL				$4,788,255.00	

Ramp C over SR 7

URS

Job I-95/SR1 INTERCHANGE | Project No. 20832687 | Page ___ of ___
Description RAMP 'C' OVER SR7 | Computed by RFK | Sheet ___ of ___
PRELIMINARY PLANS QUANTITIES | Checked by ___ | Date 1/14/09
Reference

STEEL WEIGHT ITEM 605002

$$WT. = \frac{490}{144}(2)(1.15)\big(0.625(60)(258)+(1.5(16)+15(18))(71.0)+$$
$$+\big(1.5(16)+2(20)\big)(100)+2(1.5)(20)(19)+\big(1.5(20)+2(20)\big)(28)+$$
$$+2(2.5)(20)(40)\big)+\frac{490}{144}(2)(1.15)\big(0.625(60)(258)+$$
$$+(1.5)(16)(2)(71.0)+(1.5(16)+1.5(20))(100)+2(1.5)(20)(19+28)$$
$$+2(2)(20)(40)\big) = 209716+191770 = 401486 \approx \underline{402000}\#$$

SUPSTR. CONCRETE ITEM 602013

$$1/27\left(\frac{8.5}{12}\right)(29.875)(258+2(1.0))(1.05) = 214.0 \approx \underline{215\ C.Y.}$$

↑ HAUNCHES, DIAPHRAGMS, OVERHANGS

PARAPET CONCRETE ITEM 602017

$$1/27(2)(3.45)(258+2(1.0)) = 66.4 \approx \underline{68\ C.Y.}$$

URS

Job DELAWARE TURNPIKE | Project No. | Page ____ of ____
Description SR 1 INTERCHANGE RAMP 'C' | Computed by RFK | Date 8/27/08
Checked by | Date | Sheet ____ of ____
Reference

EPOXY REINFORCEMENT IN SUPSTR. ITEM 604000

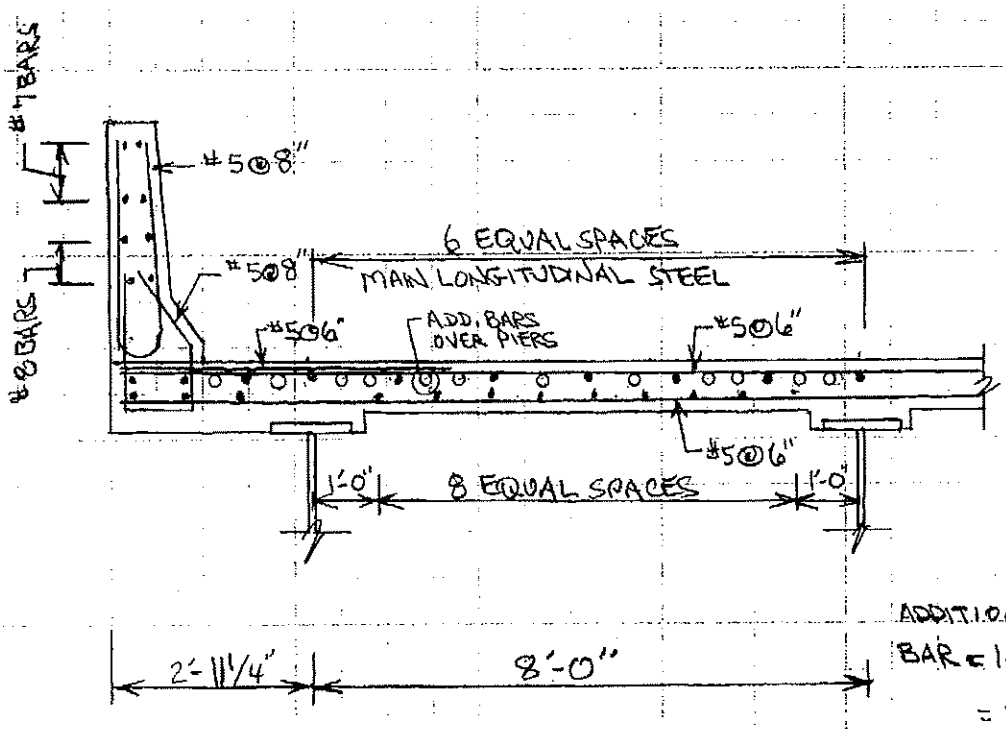

ADDITIONAL OVERHANG BAR = $1.043(4.77)\left(\frac{12}{6}\right)(2)$
$= 19.9$ plf

TRANS. SLAB BARS = $1.043(2)\left(\frac{12}{6}\right)(29.542) = 123.2$ plf

MAIN LONGITUDINAL BARS = $1.043\left((19+2(3))+(91(3)+2(3))\right) = 60.5$ plf
(↑ TOP, ↑ BOTTOM)

ADD. BARS OVER PIERS = $1.043(10(3)+2(2)) = 35.5$ plf

TRANS. PARAPET BARS = $1.043(7.0+6.0)\left(\frac{12}{8}\right)(2) = 40.7$ plf

LONG. PARAPET BARS = $(2.044(4)+2.67(4))(2) = 37.7$ plf

SUPSTR. EPOXY BARS = $(123.2+19.9+60.5+40.7+37.7)(258+2(1.0))+$
$+ 35.5(80.0) = 76160(1.10) = 83776 \approx \underline{85000}$ #
(↑ misc.)

URS

Page ____ of ____

Job DELAWARE TURNPIKE | Project No. 20832687 | Sheet ____ of ____

Description SR 1 INTERCHANGE RAMP 'C' | Computed by RFK | Date 8/27/08

Checked by ____ | Date ____

Reference

INTEGRAL PIER

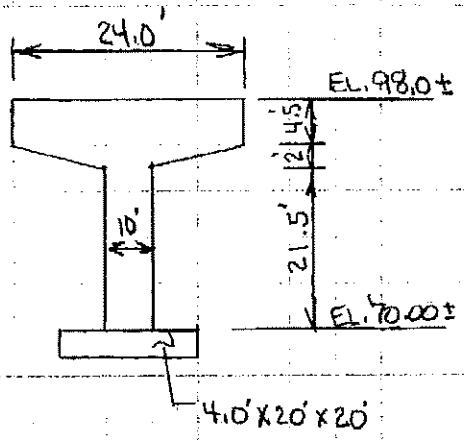

CAP = 1/27 (5.0)(6.5(10) + 2(5.5)(7.00)) = 26.3 ≈ 27 C.Y.

COLUMN = 1/27 (5(10.0) - 4(1/2(1.0X1.0))(21.5) = 38.2 ≈ 39 C.Y.

FOOTING = 1/27 (4.0)(20)(20) = 59.3 ≈ 60 C.Y. ITEM-602006

PIPE PILE OPTION = (9 X120) = 1080'

URS

Page ____ of ____

Job DELAWARE TURNPIKE | Project No. 20832687 | Sheet ____ of ____

Description SR1 INTERCHANGE RAMP 'C' | Computed by RFK | Date 8/27/08

Checked by ____ | Date ____

Reference

ABUTMENTS

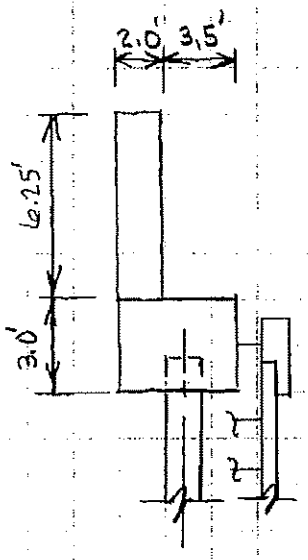

ITEM 602015

ABUTMENT CONCRETE ≅ 1/27 (2.0(6.25) + 3.0(5.50))(29.88)(2)

= 64.2 ≅ 65 CY.

EPOXY BARS IN ABUTMENT:

BACKWALL ≅ (1.043(2)(7) + 1.502(6.08)(2)(12/12))(29.88)(2) = 1964 #

SEE RAMP 'A' OVER I-95

BEAM SEAT ≅ (1.043(16) + 1.502(18.33)(12/12) + 1.502(3.25)(2)(12/12))(29.88)(2)

= 3226 #.

TOTAL EPOXY BARS IN ABUTMENT = 5190 ≅ 5200 #

PILES:

PIPE PILE OPTION ≅ 4(2)(120) = 960'

URS

Page ____ of ____

Job DELAWARE TURNPIKE | Project No. 20832687 | Sheet ____ of ____

Description SR 1 INTERCHANGE RAMP 'C' | Computed by RFK | Date 8/27/08

Checked by ____ | Date ____

Reference

MSE WALLS ITEM 602553

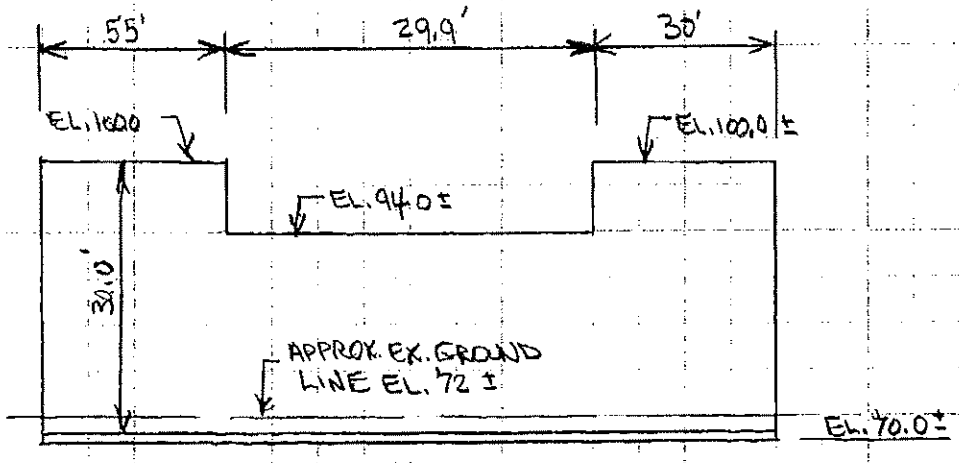

DEVELOPED ELEVATION AT ABUTMENT 'A'

WALL AREA AT ABUT. 'A' ≈ (30)(85) + 29.9 (24.0) = 3268 FT²

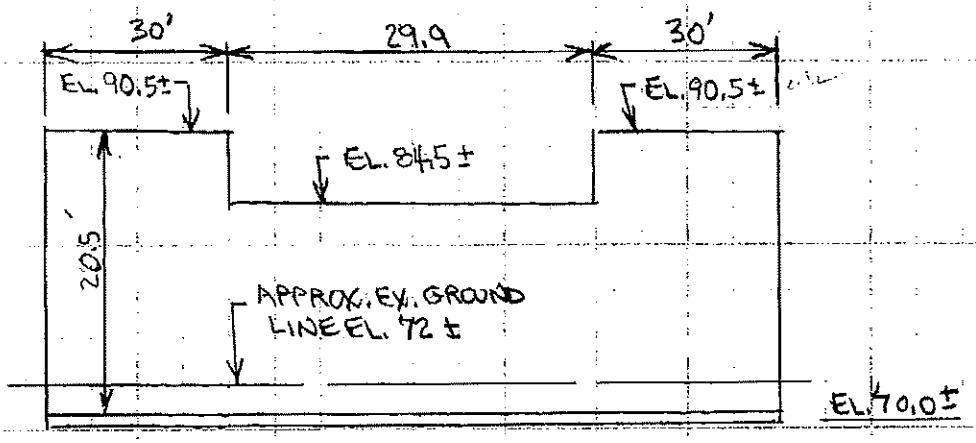

DEVELOPED ELEVATION AT ABUTMENT 'B'

WALL AREA AT ABUTMENT 'B' ≈ 2(30)(20.5) + 29.9 (14.5) = 1664 FT²

TOTAL MSE WALL AREA = 4932 ≈ 5000 FT²

URS

Page ____ of ____

Job DELAWARE TURNPIKE | Project No. 20832687 | Sheet ____ of ____

Description SR 1 INTERCHANGE RAMP 'E' | Computed by RFK | Date 8/27/08

Checked by ____ | Date ____

Reference

PARAPET CONCRETE ON MSE WALLS:

$1/27\,(3.45)(85+60) = 18.5 \approx 20$ C.Y.

↑ AREA

EPOXY STEEL IN PARAPET CONCRETE ON MSE WALLS:

$(40.7+37.7)(85+60) = 11368 \approx 12000$ #

↑ SEE EPOXY BARS IN SUP STR. CALC.

APPROACH SLAB — ITEM 602009

CONCRETE = $1/27\,(1.33)(27.0)(20.0)(2) = 53.2 \approx 55$ C.Y.

LEN. ↓ DEPTH ↑ WIDTH ↑

EPOXY BARS:

TRANS. BARS = $1.502(2)(27.0)(\frac{12}{12})(20.0)(2) = 3244$ #

↑ SEE RAMP 'A' OVER I-95

LONG. BARS = $3.400(2)(27(\frac{12}{6}))(20.0)(2) = 14688$ #

EPOXY BARS IN APPROACH SLAB = $17932 \sim 18000$ #

PRELIMINARY PLANS COST ESTIMATE
RAMP C OVER SR 7
2 SPANS 110'-148' = 258'
CONCRETE INTEGRAL PIER

URS

ITEM	QUANTITY	UNIT	UNIT PRICE	COST	
SUPERSTRUCTURE STEEL	402000	LB	$2.00	$804,000.00	605000
SUPERSTRUCTURE CONCRETE	215	CY	$700.00	$150,500.00	602013
PARAPET CONCRETE	88	CY	$1,500.00	$132,000.00	602017
APPROACH SLAB CONCRETE	55	CY	$700.00	$38,500.00	602009
EPOXY COATED REINFORCEMENT	120200	LB	$1.20	$144,240.00	604000
MSE WALLS	5000	SF	$45.00	$225,000.00	602553
ABUTMENTS:					
SUBSTR. CONCRETE	65	CY	$700.00	$45,500.00	602015
PIPE PILES	960	FT	$200.00	$192,000.00	
INTEGRAL PIERS:					
PIER CAP CONCRETE	27	CY	$1,200.00	$32,400.00	
PIER COLUMN CONCRETE	39	CY	$750.00	$29,250.00	
FOOTING CONCRETE	60	CY	$700.00	$42,000.00	602006
PIPE PILES	1080	FT	$200.00	$216,000.00	
SUBTOTAL				$2,051,390.00	
15% CONTINGENCY				$307,708.50	
TOTAL				$2,359,098.50	

Ramp G1 over SR 7

URS

Job I-95/SR.1 INTERCHANGE | Project No. 20832687 | Page ____ of ____
Description RAMP 'G' OVER SR.7 | Computed by RFK | Sheet ____ of ____
PRELIMINARY PLANS QUANTITIES | Checked by ____ | Date 1/14/09
Reference

STEEL WEIGHT ITEM 605002

$$WT. = \frac{490}{144}(4)(1.15)\Big(0.625(60)(585.0) + (1.5(16)+2(20))(110) +$$
$$+ (1.5(16)+1.75(18))(76+72+94) + (2(24)(2))(20+24) +$$
$$+ 2.75(24)(2)(45) + 2.25(20)(2)(72+72)\Big) = 1025766 \simeq 1026000^{\#}$$

SUPSTR. CONCRETE ITEM 602017

$$1/27(0.75)(35.875)(585.0+2(1.0))(1.05) = 614.2 \simeq 615 \text{ C.Y.}$$

↑ HAUNCHES, OVERHANGS END DIAPHRAGMS

PARAPET CONCRETE ITEM 602013

$$1/27(2(3.45))(585.0+2(1.0)) = 150.0 \simeq 152 \text{ C.Y.}$$

EPOXY REINFORCEMENT IN SUPSTR. ITEM 604000 (SEE RAMP 'A' OVER I-95)

TRANSVERSE SLAB BARS = $1.043(2)(\frac{12}{5})(35.54) = 177.9$ plf

TRANSVERSE SLAB BARS OVERHANG = $1.043(\frac{12}{10})(6.28)(2) = 15.7$ plf

MAIN LONGITUDINAL BARS = $1.043((25+2(3))+(14(3)+2(4))) = 84.5$ plf

ADDITIONAL BARS OVER PIERS = $1.043(16(3)+2(4)) = 58.4$ plf

URS

Job I-95/SR 1 INTERCHANGE | Project No. 20832687 | Page ____ of ____
Description RAMP 'G1' OVER SR 7 | Computed by RFK | Date 8/26/08
Checked by ____ | Date ____
Reference

TRANSVERSE PARAPET BARS = $1.043(7.0+6.0)\left(\frac{12}{8}\right)(2) = 40.7$ plf

LONGITUDINAL PARAPET BARS = $(2.044(4)+2.670(2))(2) = 37.7$ plf

SUPSTR. EPOXY BARS = $(177.9+157.+84.5+40.7+37.7)(585.0+2(1.0))$

$+ 52.4(89+72+72)$

$= 222873(1.10) = 245160 \Rightarrow 246{,}000$ #

↑ MISC.

URS

Job I-95/ SR 1 INTERCHANGE | Project No. 20032687 | Page ____ of ____
Description RAMP 'G' OVER SR 4 | Computed by RFK | Sheet ____ of ____
Checked by ____ | Date 8/26/08 | Date ____
Reference

INTEGRAL PIERS

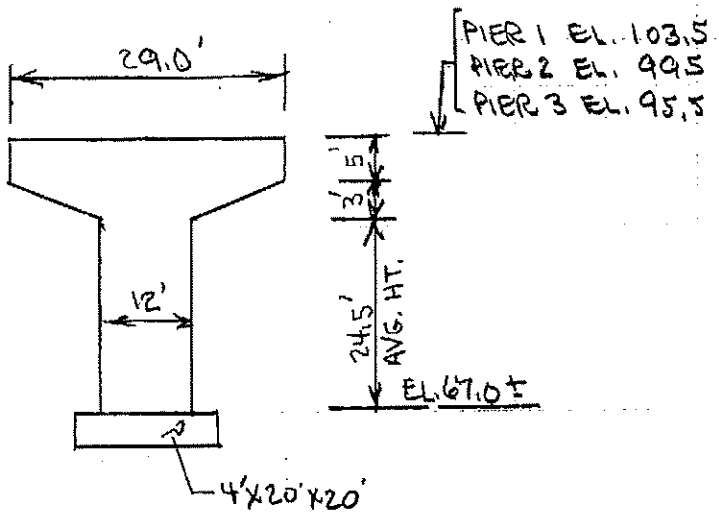

CAP = 1/27 (5.0)(8(12) + 2(6.5)(8.50)) = 38.8 ≈ 39 (3) = 117 C.Y. ← 3 PIERS

COLUMN = 1/27 (5)(12)(24.5) = 54.4 ≈ 55 (3) = 165 C.Y.

FOOTING = 1/27 (4)(20)(20) = 59.3 ≈ 60 (3) = 180 C.Y. ITEM 602006

PIPE PILES = 3 (9)(120) = 3240'

URS

Job I-95/SR 1 INTERCHANGE | Project No. 20832687 | Page ___ of ___
Description RAMP 'G' OVER SR 7 | Computed by RFK | Date 8/26/08
Checked by ___ | Date ___
Reference

ABUTMENTS

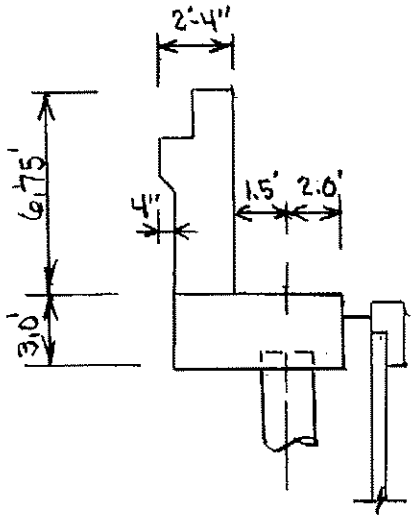

ITEM 602015

CONCRETE = $\frac{1}{27}((2.0)(6.75)+3(5.5))(35.88)(2)$

= 79.7 ≈ 80 C.Y.

EPOXY BARS IN ABUTMENT:

BACKWALL = $(1.043(2)(7)+1.502(6.58)(2)(\frac{12}{12}))(35.88)$

= 1233(2) = 2466 #

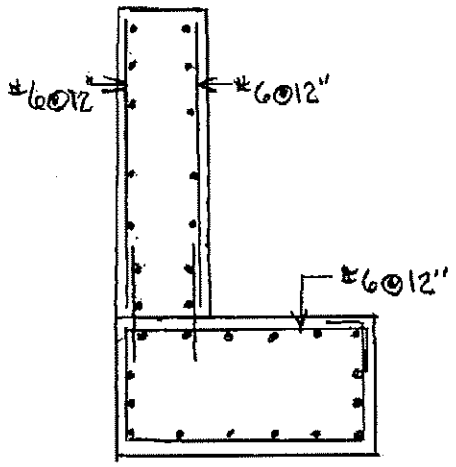

BEAM SEAT = $(1.043(16)+1.502(18.33)(\frac{12}{12})+$
$1.502(3.25)(2)(\frac{12}{12}))(35.88)$

= 1937(2) ≈ 3874 #

TOTAL EPOXY BARS IN ABUTMENT ≈ 6400 #

PILES:

PIPE PILES = 4(2)(120) = 960'

URS

Job I-95/SR1 INTERCHANGE | Project No. 20032687 | Page ____ of ____
Description RAMP 'G' OVER SR 7 | Computed by RFK | Sheet ____ of ____
Checked by ____ | Date 8/26/08 | Date ____
Reference

MSE WALLS ITEM 602553

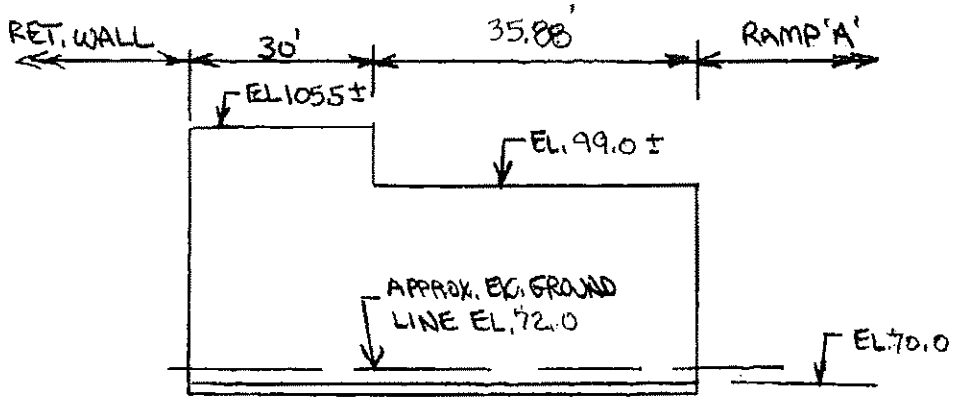

DEVELOPED ELEVATION AT ABUTMENT 'A'

WALL AREA AT ABUT. 'A' = 30(35.5) + 35.9 (29.0) ≅ 2106 FT²

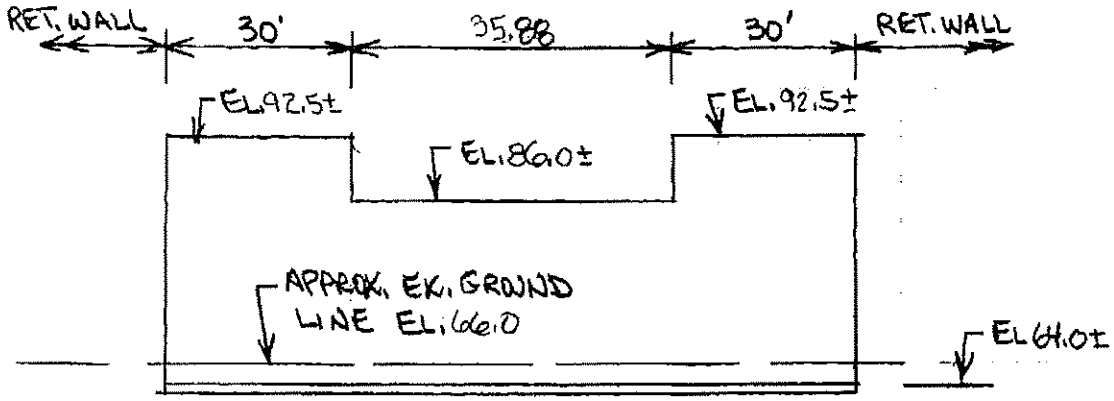

DEVELOPED ELEVATION AT ABUTMENT 'B'

WALL AREA AT ABUTMENT 'B' = 2(30)(28.5) + 35.9 (22.0) ≅ 2500. FT²

TOTAL MSE WALL AREA ≅ 4700 FT²

URS

Job I-95/SR 1 INTERCHANGE | Project No. 20832687 | Page ____ of ____
Description RAMP 'G1' OVER SR 7 | Computed by RFK | Sheet ____ of ____
Checked by ____ | Date 8/26/08 | Date ____
Reference

PARAPET CONCRETE ON MSE WALLS:

$1/27(3.45)(30(3)) = 11.5 \approx \underline{12\ C.Y.}$

(AREA)

EPOXY STEEL IN PARAPET CONCRETE ON MSE WALLS:

$(40.7+37.7)(30(3)) = 7056 \approx \underline{7100\ ^{\#}}$

(SEE EPOXY BARS IN SUPSTR. CALC.)

APPROACH SLAB

(ITEM 602009)

CONCRETE $= 1/27\,(1.33(33.0)(20.0))(2) = 65.0 \approx \underline{67\ C.Y.}$

(LEN., WIDTH, DEPTH)

EPOXY BARS:

TRANS. BARS $= 1.502(2)(33.0)\left(\frac{12}{12}\right)(20)(2) \approx 3965^{\#}$

(SEE RAMP 'A' OVER I-95)

LONG. BARS $= 3.400(2)(33)\left(\frac{12}{6}\right)(20)(2) = 17952^{\#}$

EPOXY BARS IN APPROACH SLAB $= 21917 \approx \underline{22,000\ ^{\#}}$

PRELIMINARY PLANS COST ESTIMATE
RAMP G1 OVER SR 7
4 SPANS 150'-161'-144'-130' = 585'
CONCRETE INTEGRAL PIERS

URS

ITEM	QUANTITY	UNIT	UNIT PRICE	COST	
SUPERSTRUCTURE STEEL	1026000	LB	$2.00	$2,052,000.00	605002
SUPERSTRUCTURE CONCRETE	615	CY	$700.00	$430,500.00	602013
PARAPET CONCRETE	164	CY	$1,500.00	$246,000.00	602017
APPROACH SLAB CONCRETE	67	CY	$700.00	$46,900.00	602009
EPOXY COATED REINFORCEMENT	281500	LB	$1.20	$337,800.00	604000
MSE WALLS	4700	SF	$45.00	$211,500.00	602553
ABUTMENTS:					
SUBSTR. CONCRETE	80	CY	$700.00	$56,000.00	602015
PIPE PILES	960	FT	$200.00	$192,000.00	
INTEGRAL PIERS:					
PIER CAP CONCRETE	117	CY	$1,200.00	$140,400.00	
PIER COLUMN CONCRETE	165	CY	$750.00	$123,750.00	
FOOTING CONCRETE	180	CY	$700.00	$126,000.00	602006
PIPE PILES	3240	FT	$200.00	$648,000.00	
SUBTOTAL				$4,610,850.00	
15% CONTINGENCY				$691,627.50	
TOTAL				$5,302,477.50	

Retaining Walls 1-3

URS

Job I-95/SR1 INTERCHANGE | Project No. 20832687 | Page ____ of ____
Description WALL QUANTITIES | Computed by RFK | Sheet ____ of ____
Checked by ____ | Date 9/23/08 | Date ____
Reference

MSE WALLS

WALL NO:1

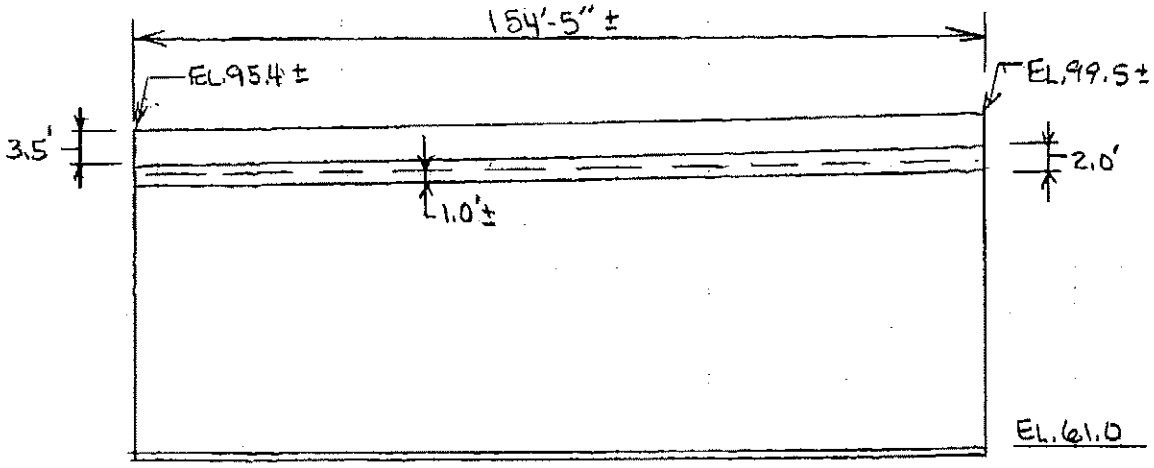

WALL AREA ≈ 31.95 (154.42) = 4934 ≈ 4950 SF

PARAPET CONCRETE & MOMENT SLAB:

$\frac{1}{27}(3.46+9.2)(154.42) = 72.4 \approx 73$ C.Y.

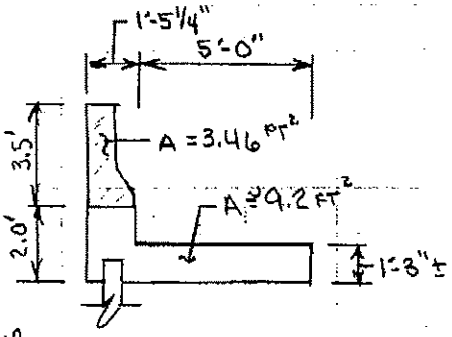

EPOXY BARS:

TRANSVERSE BARS:

$1.043(7.0+3.75(2)+5.25(2))\left(\frac{12}{8}\right)$
$= 39.1$ plf

LONGITUDINAL BARS:

$(2.044(4)+2.67(4)+1.043(14)) = 33.5$ plf

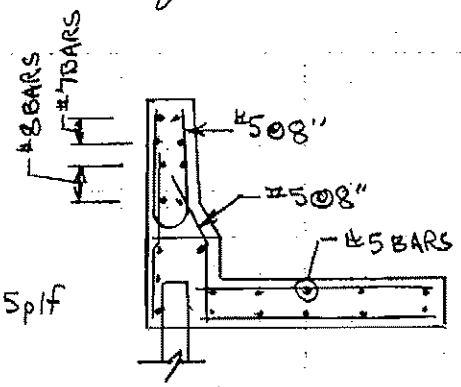

TOTAL BARS = (39.1+33.5)(154.42) = 11211 ≈ 12000 #

URS

Page ____ of ____

Job I-95/SR1 INTERCHANGE Project No. 20832687 Sheet ____ of ____

Description WALL QUANTITIES Computed by RFK Date 9/23/08

Checked by ____ Date ____

Reference

WALL NO. 2

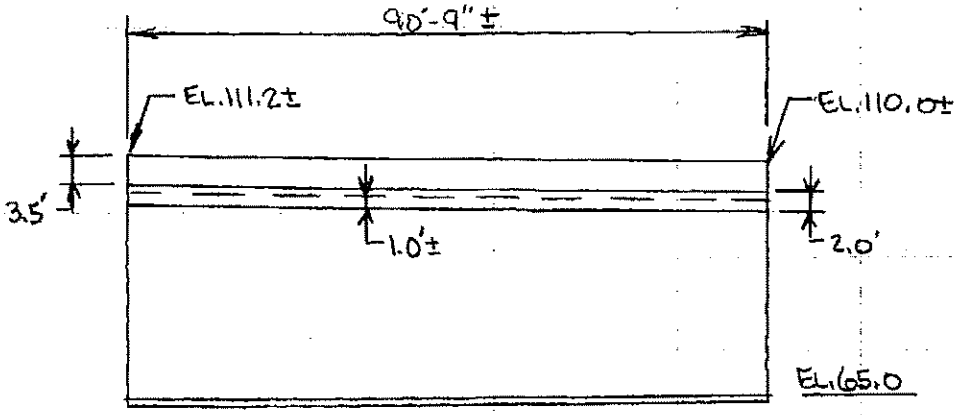

WALL AREA: 41.10(90.75) = 3730 ≈ 3750 FT²

PARAPET & MOMENT SLAB CONCRETE:

1/27(3.46+9.2)(90.75) = 42.6 ≈ 43 C.Y.

EPOXY BARS:

TOTAL BARS = (39.1+33.5)(90.75) = 6588 ≈ 6600 LB

URS

Job I-95/SR1 INTERCHANGE Project No. 20832687 Page ____ of ____

Description WALL QUANTITIES Computed by RFK Sheet ____ of ____

Checked by ____ Date 9/23/08

Reference

WALL NO.3

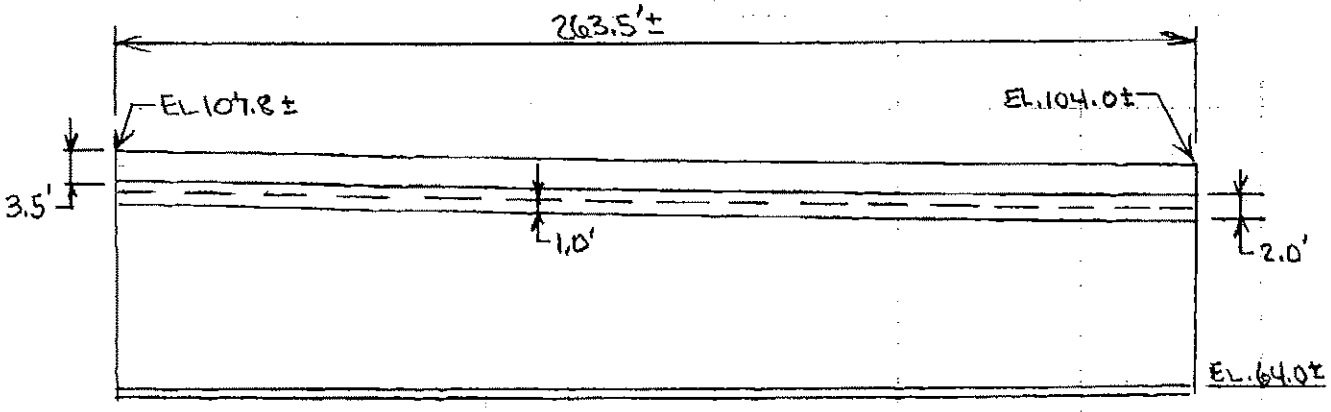

WALL AREA ≈ (37.4)(263.5) = 9855 ≈ 9900 FT^2

PARAPET & MOMENT SLAB CONCRETE:

1/27(3.46+9.2)(263.5) = 123.6 ≈ 124 C.Y.

EPOXY BARS:

TOTAL BARS = (39.1+33.5)(263.5) = 19130 ≈ 19500#

COST ESTIMATE - WALL 1

URS

ITEM	QUANTITY	UNIT	UNIT PRICE	COST
PARAPET CONCRETE	73	CY	$1,500.00	$109,500.00
EPOXY COATED REINFORCEMENT	12000	LB	$1.20	$14,400.00
MSE WALLS	4950	SF	$45.00	$222,750.00
SUBTOTAL				$346,650.00
15% CONTINGENCY				$51,997.50
TOTAL				$398,647.50

COST ESTIMATE - WALL 2

ITEM	QUANTITY	UNIT	UNIT PRICE	COST
PARAPET CONCRETE	43	CY	$1,500.00	$64,500.00
EPOXY COATED REINFORCEMENT	6600	LB	$1.20	$7,920.00
MSE WALLS	3750	SF	$45.00	$168,750.00
SUBTOTAL				$241,170.00
15% CONTINGENCY				$36,175.50
TOTAL				$277,345.50

COST ESTIMATE - WALL 3

ITEM	QUANTITY	UNIT	UNIT PRICE	COST
PARAPET CONCRETE	124	CY	$1,500.00	$186,000.00
EPOXY COATED REINFORCEMENT	19500	LB	$1.20	$23,400.00
MSE WALLS	9900	SF	$45.00	$445,500.00
SUBTOTAL				$654,900.00
15% CONTINGENCY				$98,235.00
TOTAL				$753,135.00

Delaware Turnpike
SR-1 Interchange
Christiana River to I-95

Preliminary Quantity and Cost Estimate
Structure: Ramp B Over I-95NB

Item Description	Quantity	Unit	Unit Price	Cost
Superstructure Steel	1723000	LB	$ 1.75	$ 3,015,250.00
Superstructure Concrete	780	CY	$ 700.00	$ 546,000.00
Parapet Concrete	210	CY	$ 1,500.00	$ 315,000.00
Approach Slab Concrete	65	CY	$ 700.00	$ 45,500.00
Epoxy Coated Reinforcement	348500	LB	$ 1.20	$ 418,200.00
MSE Walls	5935	SF	$ 45.00	$ 267,075.00
Abutments				
Substructure Concrete	90	CY	$ 700.00	$ 63,000.00
Pipe Piles	1200	LF	$ 200.00	$ 240,000.00
Bearings	8	EA	$ 8,000.00	$ 64,000.00
Integral Piers (Piers 1 and 3)				
Pier Cap Concrete	90	CY	$ 1,200.00	$ 108,000.00
Pier Column Concrete	70	CY	$ 750.00	$ 52,500.00
Footing Concrete	80	CY	$ 700.00	$ 56,000.00
Pipe Piles	1800	LF	$ 200.00	$ 360,000.00
Cross Girder Pier (Pier 2)				
Cross Girder Steel	141800	LB	$ 2.50	$ 354,500.00
Cross Girder Concrete Fill	150	CY	$ 500.00	$ 75,000.00
Bearings	2	EA	$ 10,000.00	$ 20,000.00
Columns Concrete	60	CY	$ 750.00	$ 45,000.00
Footing Concrete	80	CY	$ 700.00	$ 56,000.00
Pipe Piles	1170	LF	$ 200.00	$ 234,000.00
			Subtotal =	$ 6,335,025.00
			15% Continency =	$ 950,253.75
			Total =	***$ 7,286,000.00***

PRELIMINARY

QUANTITY ESTIMATE - RAMP B OVER I-95 NB:

① SUPERSTRUCTURE STEEL: (LB)

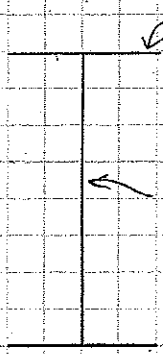

- ASSUME 2½" THICK FLANGES T&B FULL LENGTH
- 4 GIRDERS
- LENGTH = 752' (INCLUDING 1FT PAST ℄ BRG. AT ABUTMENTS)

$(490\ PCF)(4\ GIRDERS)(752')\left[(18"\times 2.5")(2)+(84")(0.75")\right]\div 144\times 1.10$ ← BRACING, SPLICE PL ETC.

$= 1{,}722{,}644\ LB$

SAY **1,723,000 LB**

② SUPERSTRUCTURE CONCRETE: (CY)

DECK = 9" THICK × 33.875' WIDE

LENGTH = 753' (INCLUDING 1.5FT PAST ℄ BRG. AT ABUTMENTS)

$(0.75')(33.875')(753')\div 27\times 1.10 =$ **780 CY**

③ PARAPET CONCRETE: (CY)

42" F-SHAPE (TL-5)

$[(17.25")(42") - (4.875")(32") - (\frac{1}{2})(4.875")(7") - (\frac{1}{2})(3.375")(32")] \div 144 = 3.45$ SF

LENGTH = $(750' + 30' + 30') \times 2$ SIDES = 1620 FT

(30' ALONG WINGWALLS)

$(3.45 \text{ SF})(1620 \text{ FT}) \div 27 = 207$ CY

SAY **210 CY**

④ APPROACH SLAB CONCRETE: (CY)

ASSUME 15" THICK, 20'-0" LONG EACH END

$(33.875')(20')(1.25')(2) \div 27 = 62.7$ CY

SAY **65 CY**

⑤ EPOXY COATED REINFORCEMENT (LB)

ASSUME 330 LB REBAR PER CY OF CONCRETE

FROM ITEMS # 2, 3, & 4:

(330 LB)(780 + 210 + 65 CY) = 348,150 LB

SAY **348,500 LB**

⑥ MSE WALLS (SF)

ABUTMENT B:

- WING WALLS: AVG TOP OF WALL ELEV ≈ 114.50

AVG BOTTOM OF WALL ELEV ≈ 85 - 2' = 83.0

AVG HEIGHT = 114.5 - 83.0 = 31.50'

(2)(33.5')(31.5') = 2110.5 SF

- ABUTMENT FRONT:

HEIGHT = $31.50' - \frac{13''}{12} - \frac{86''}{12} - 1' = 22.25'$

(22.25')(33.875') = 753.7 SF

STA. 1712+00 (ABUT. B)

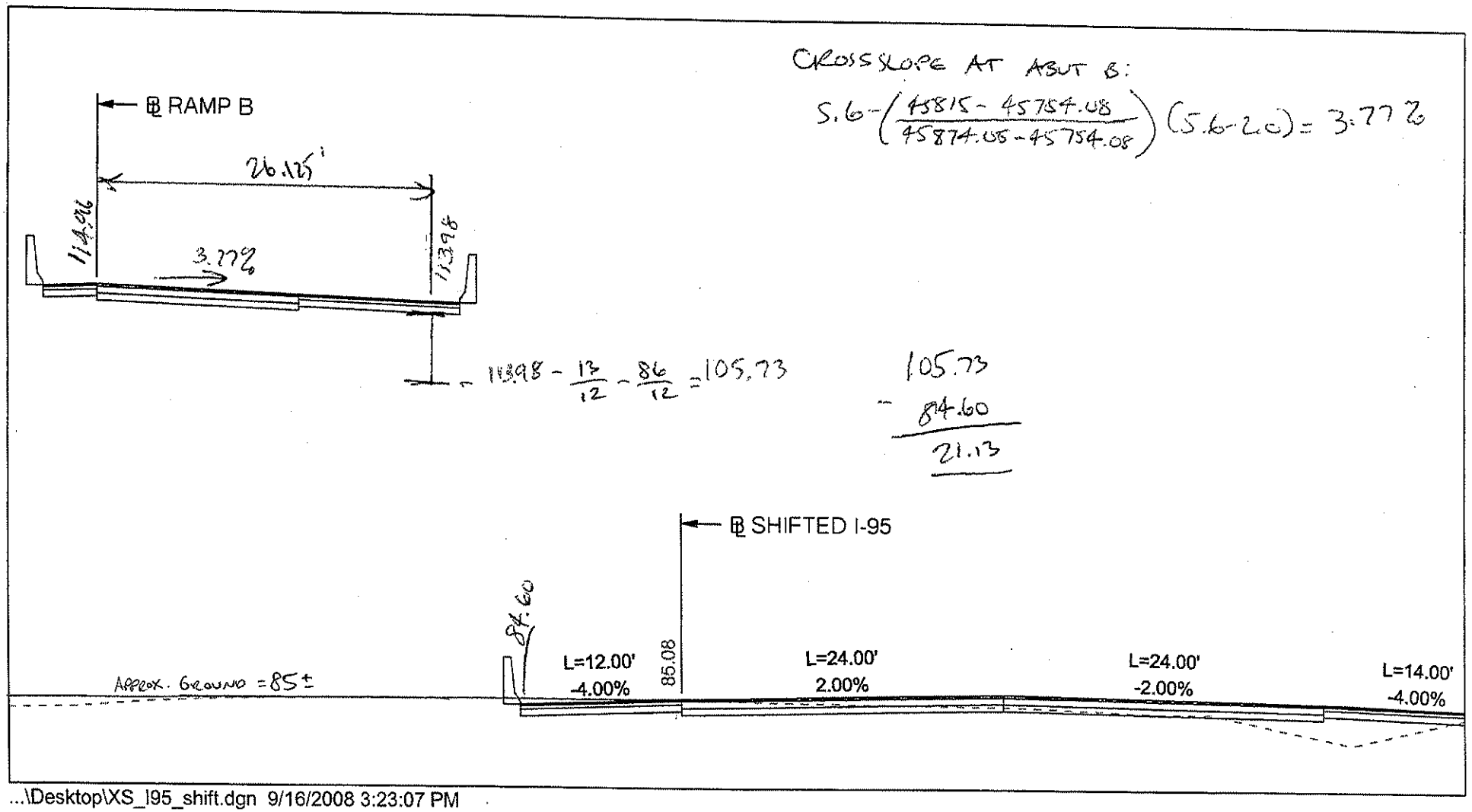

CROSSLOPE AT ABUT B:

$5.6-\left(\frac{45815-45754.08}{45874.05-45754.08}\right)(5.6-2.0)=3.77\%$

105.73
- 84.60
21.13

...\Desktop\XS_I95_shift.dgn 9/16/2008 3:23:07 PM

4/10

ABUTMENT A: ℄ ELEV. = 99.97 + (0.0146)(45065 - 43650) = 120.64

- WINGWALLS: AVG TOP OF WALL ELEV ≈ 120.5'

AVG BOTTOM OF WALL ELEV ≈ 89 - 2 = 87.0'

AVG. HEIGHT = 120.5 - 87 = 33.5'

(2)(33.5')(33.5') = 2244.5 SF

- ABUTMENT FRONT:

HEIGHT = $33.5' - \frac{13''}{12} - \frac{86''}{12} - 1' = 24.25'$

(24.25')(33.875') = 821.5 SF

TOTAL = 2110.5 + 753.7 + 2244.5 + 821.5 = 5930.2 SF

SAY 5935 SF

① ABUTMENT CONCRETE: (CY)

$$(2)\left[(3')(6') + (1.33)\left(\frac{86''}{12} + 1'\right) + (1')(6')\right](33.875') \div 27$$

= 87.5 cy

SAY 90 cy

⑧ ABUTMENT PIPE PILES: (LF)

PER PRELIM FNDTN ANALYSIS ⇒ 8 PILES PER ABUTMENT

≈ 75 FT LENGTH @ ABUTMENT A & B

(8 PILES) (2 ABUTS) (75 LF) = **1200 LF**

⑨ BEARINGS (EA)

2 × 4 = **8 EA**

⑩ INTEGRAL PIER CAP CONCRETE (CY)

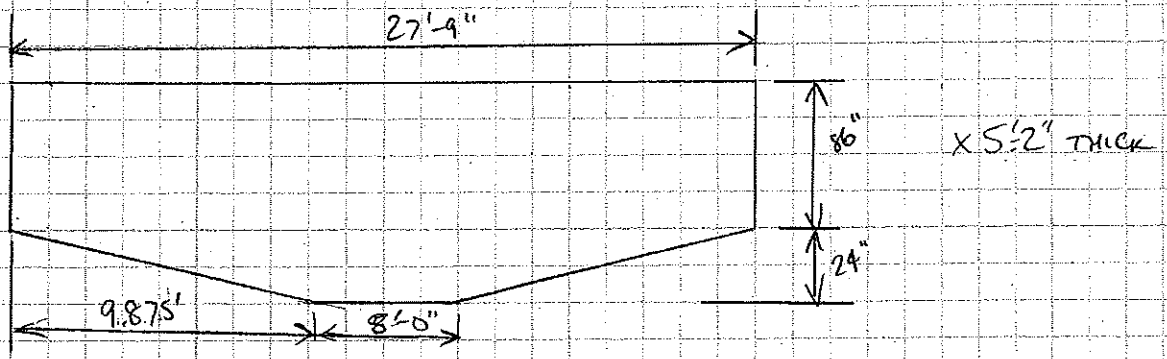

× 5'-2" THICK

(2 PIERS) [(27.75)(86"/12) + (9.875')(2') + (8')(2')] (5.17') ÷ 27

= 89.9 CY

SAY **90 CY**

(11) INTEGRAL PIER COLUMN CONCRETE (CY)

ASSUME APPROX. 25' FROM TOP OF COLUMN TO TOP OF FOOTING @ EACH PIER 1 & 3

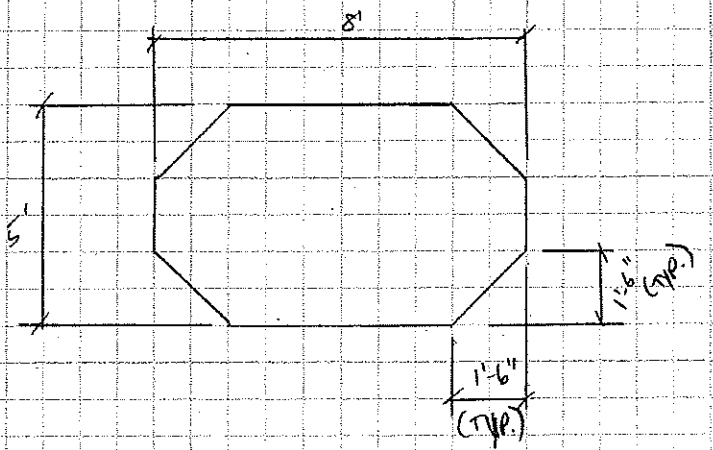

(2 PIERS) $[(8')(5') - (2)(1.5')^2](25') \div 27 = 65.74$ CY

SAY **70 CY**

(12) INTEGRAL PIER FOOTING CONCRETE (CY)

16 FT SQUARE - PRELIMINARY SIZE

ASSUME 4 FT THICK

$(2)(16')(16')(4') \div 27 = 75.9$ CY

SAY **80 CY**

(13) INTEGRAL PIER PIPE PILES: (LF)

ASSUME 100 LF LONG PIPE PILES FROM PRELIM. ANALYSIS

9 PILES PER PIER

(2)(9)(100 LF) = **1800 LF**

(14) CROSS GIRDER STEEL: (LB)

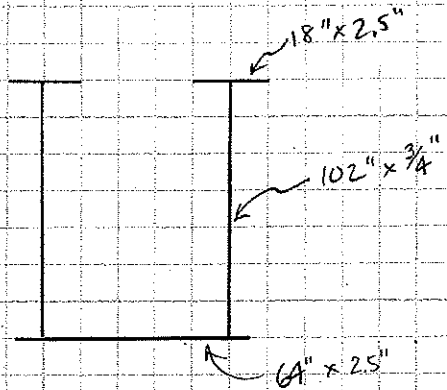

APPROX. TOTAL GIRDER LENGTH = 88.6' + (2.75')(2) = 94' ±

(490 PCF) [(64")(2.5") + (102")(0.75")(2) + (18")(2.5")(2)] ÷

(490 PCF) [(64")(2.5") + (102")(0.75")(2) + (18")(2.5")(2)] ÷ 144 x 94' x 1.10

= 141794.4 LB

SAY **141,800 LB**

(15) CROSS-GIRDER CONCRETE FILL (CY)

$[(102")(60") \div 144] \times 94' \div 27 = 148$ CY

SAY **150 CY**

(16) CROSS-GIRDER BEARINGS (EA)

2 EA

(17) CROSS-GIRDER COLUMNS CONCRETE (CY)

APPROX. HEIGHTS: LOW END = 22' + 3' = 25'

HIGH END = 25' + (88.5)(0.056) = 30'

$(30' + 25')[(5.6')(5.6') - (2)(1.4')^2] \div 27 = 55.9$ CY

SAY **60 CY**

(18) CROSS-GIRDER FOOTING CONCRETE (cy)

SAME FOOTINGS AS ITEM # 12

SAY 80 cy

(19) CROSS GIRDER PIPE PILES (LF)

ASSUME 65FT LONG PIPE PILES FROM PRELIM. ANALYSIS

9 PILES PER FOOTING

(2)(9)(65LF) = 1170 LF

SR-1 Interchange
Cost Estimate: Ramp R1 over SR7
Date: 10/1/08

Item	Quantity	Unit	Unit Price	Cost
Superstructure:				
Superstructure Steel	46,600	LB	$1.75	$81,550.00
Superstructure Concrete	480	CY	$700.00	$336,000.00
Parapet Concrete	63	CY	$1,500.00	$94,500.00
Approach Slab Concrete	200	CY	$700.00	$140,000.00
Epoxy Coated Reinforcement	130,000	LB	$1.20	$156,000.00
Abutments:				
Substructure Concrete	512	CY	$700.00	$358,400.00
Footing Concrete	264	CY	$700.00	$184,800.00
Steel H-Piles (HP 14x73)	4620	LF	$200.00	$924,000.00
Pier:				
Substructure Concrete	62	CY	$700.00	$43,400.00
Footing Concrete	100	CY	$700.00	$70,000.00
Steel H-Piles (14x73)	1728	LF	$200.00	$345,600.00
Wing Walls:				
Substructure Concrete	200	CY	$700.00	$140,000.00
Footing Concrete	245	CY	$700.00	$171,500.00
Steel H-Piles	3585	LF	$200.00	$717,000.00
Subtotal				$3,762,750.00
15% Contingency				$564,412.50
Total				$4,327,162.50

RUMMEL, KLEPPER & KAHL, LLP
81 Years "A Tradition Of Excellence"

Subject R1 over SR7 Estimate for Bridge | Page 1 of | Cm. No. 103-059-26A
Prepared By STS | Date 2/12/08 | Checked By JSW | Date 2-18-08

Superstructure Steel (Steel girders):

West Abutment to Splice #1: $[(46/12)(0.625/12)+(12/12)(1/12)+(15/12)(1.5/12)](490)(78.5)(8$

$=135,162$

Splice #1 to Splice #2: $[(46/12)(0.625/12)+(18/12)(2/12)+(18/12)(2/12)](490)(62)(8)$

$=170,044$ lb

Splice #2 to East Abut: $[(46/12)(0.625/12)+(12/12)(1/12)+(15/12)(1.5/12)](490)(80.5)(8)$

$=138605$ lb

Subtotal = 443,811 lbs
+ 5%
Total Superstructure Steel = 466,00

Superstructure Concrete (Deck):

$=[(8.5/12)(72.625)+(6)(8/12)](221.64)$

$+(3/12)(8/12)(\cancel{15})(221.64)(8)$

Total Slab Concrete = 12,953 ft³

Total Slab Concrete = 480.0 cuyd

Parapet Concrete: Assume 3 ft² / LF from previous calculations.

$= (3\ ft^2)(221.64)(2) = 1329.84\ ft^3$ (+60 = 1689.84)

Total Parapet concrete = 49.75 cuyd = 63

Approach Slab Concrete: Assume 1.25 ft thick

$= (1.25)(72.625)(30)(2) = 5446.88\ ft^3$

Total Approach Slab Concrete = 201.74 cuyd

Epoxy Coated Reinforcement: Referencing PennDOT Standard Deck Slabs Sheets 2 and 9 and 1

S1 bars (Bot. Transverse) = #5 @ 6-½

$= \frac{1.043\ lb}{1\ ft} = \frac{X\ lbs}{6.5/12}$

∴ Weight $= \left(\frac{219.3125\ ft}{(6.5/12)\ ft}\right)(1.043)(72.62$

$= 30,669$ lbs

S2 bars (Top. Transverse) = #5 @ 5-½

$= \left(\frac{219.3125\ ft}{(5.5/12)\ ft}\right)(1.043)(72.62$

$= 36,245$ lbs

S3 bars (Bottom Longitudinal) = #5 @ 9-½

$= \left(\frac{72.625\ ft}{(9.5/12)\ ft}\right)(1.043)(159.00\ ft$ (Pos. (+) Mom. Re

$= 15,213$ lbs

S4 bars (Top Longitudinal) = #5 @ 12

$= \left(\frac{72.625\ ft}{(12.5/12)\ ft}\right)(1.043)(159.00\ ft$

$= 12,044$ lbs

S3' bars (Bottom Longitudinal Over Neg. Moment)
= #5 @ 6

$= \left(\frac{72.625\text{ ft}}{(6/12)\text{ ft}}\right)(1.043)(62\text{ ft})$

(62 ft: Neg Mom. Region)

= 9,393 lbs

S5 (Top Longitudinal Over Neg. Moment)
= #5 @ 12

$= \left(\frac{72.625\text{ ft}}{(12/12\text{ ft})}\right)(1.043)(62\text{ft})$

= 4,696 lbs

S6 (More Top Long. Over Neg. Moment)
= #6 @ 12

$= \left(\frac{72.625\text{ ft}}{(12/12)\text{ ft}}\right)(1.502)(62\text{ ft})$

= 6763.1 lbs

SUBTOTAL DECK Epoxy Rebar = 115,023 lbs

Parapet Steel (Include w/Epoxy Steel) = $[(1.502)(4) + (1.043)(4)](2)(219.3125)$

$+ \left(\frac{219.3125}{(12/12)}\right)(0.668)\left(\frac{8}{12} + 3.5 + 1.0 + 3.5 + \frac{8}{12}\right)$

$+ \left(\frac{219.3125}{(12/12)}\right)(0.668)\left(\frac{8.5}{12} + 1 + 1 + 1 + \frac{8.5}{12}\right)$

SUBTOTAL PARAPET ST. = 6,284.25

SUBTOTAL EPOXY REBAR = 121,307.25 lbs

\+ 5%

TOTAL EPOXY REBAR = 127372.6 lbs

Parapet Section

This section is from "Standard Concrete deck slab design and details for beam bridges," Sheet 2 of 11, under "Typical concrete barrier detail". PENNDOT Standard

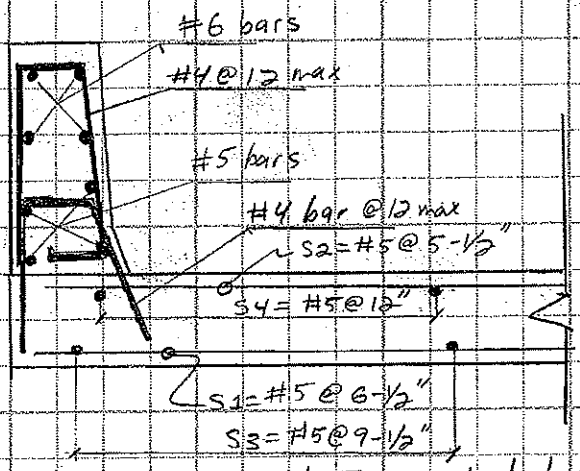

Typical Concrete Barrier Detail (Approximate)

Notes: - Above section is for simple and continuous, composite positive moment regions.
- See Sheet 1 of 11 for additional information about bars in the slab
- See sheet 1 of 11 for additional reinforcement over negative moment regions:

S3' (Bot. Longitudinal) = #5@6
S5 (Top Longitudinal) = #5@12
S6 (More Top Long.) = #6@12

WING WALL QUANTITIES

Substructure Concrete	**199 CY**
Footing Concrete	**245 CY**
Piles	**3585 LF**

TYPICAL WING WALL DIMENSIONS:

Stem Thickness:	$t_w =$	2 ft
Depth of Footing in Ground:	$D_f =$	2 ft
Starting Height of Wall above Ground:	$h_{1n} =$	25.5 ft
Slope of Top of Walls for WWs III & VI:	$s_w =$	2.828 :1
Ending Ht. of Wall for WWs I & II:	$h_{2n} =$	3.5 ft
Ending Ht. of Wall for WWs III & VI:	$h_{2n} = h_{1n} - L_w/s_w =$	16.31 ft

TYPICAL FOOTING DIMENSIONS:

Footing Thickness:	$t_f =$	3 ft
Toe Projection:	$b_T =$	2 ft
Heel Projection:	$b_H =$	11.5 ft
Footing Width:	$B_f =$	15.5 ft

TYPICAL PILE DIMENSIONS:

Side Edge Distance:	$s_{Pe} =$	1.5 ft		
First Row Spacing:	$s_{P1} =$	5 ft	$\rho_{P1} = 1/s_{P1} =$	0.200 piles/ft
Second Row Spacing:	$s_{P2} =$	5 ft	$\rho_{P2} = 1/s_{P2} =$	0.200 piles/ft
Third Row Spacing:	$s_{P3} =$	10 ft	$\rho_{P3} = 1/s_{P3} =$	0.100 piles/ft
Pile Density:	$\rho_P = \Sigma(1/s_{Pi}) =$	0.500 piles/ft		
Pile Length for WWs I & II:	$L_{Pile} =$	45 ft		
Pile Length for WWs III & VI:	$L_{Pile} =$	60 ft		

EQUATIONS:

Wing Wall Heights:	$h = h_n + D_f$
WW III & IV End Wall Hts:	$h_2 = h_1 - L_w / s_w$
Total Stem Volume:	$V_w = L_w \cdot t_w \cdot (h_1 + h_2)/2$
Total Footing Volume:	$V_f = L_w \cdot t_f \cdot B_f$
Number of Piles per WW:	$N_P = r_P \cdot L_w$
Total Length of Piles:	$L_P = N_P \cdot L_{Pile}$

TOTAL CONCRETE CALCULATIONS:

	Wall Length L_w (ft)	Stem Height: Start h_1 (ft)	Stem Height: End h_2 (ft)	Concrete Volume: Stem V_w (cf)	Concrete Volume: Footing V_f (cf)	Concrete Volume: Stem V_w (cy)	Concrete Volume: Footing V_f (cy)
Wing Wall I:	50	27.5	5.5	1650	2325	61.11	86.11
Wing Wall II:	40	27.5	5.5	1320	1860	48.89	68.89
Wing Wall III:	26	27.5	18.31	1191	1209	44.11	44.78
Wing Wall VI:	26	27.5	18.31	1191	1209	44.11	44.78
						200	245

PILE CALCULATIONS:

	Wall Length L_w (ft)	Number of Piles: Row 1 N_{P1}	Number of Piles: Row 2 N_{P2}	Number of Piles: Row 3 N_{P3}	Number of Piles: Total N_P	Pile Length L_{pile} (ft)	Total Length L_P (ft)
Wing Wall I:	50	10	10	5	25	45	1125
Wing Wall II:	40	8	8	4	20	45	900
Wing Wall III:	26	5	5	3	13	60	780
Wing Wall VI:	26	5	5	3	13	60	780
							3585

RUMMEL, KLEPPER & KAHL, LLP

"A Tradition Of Excellence" since 1923

Subject SR1 INTERCHANGE — Page 1 of 2

RAMP R1 PIER QUANTITIES — Cm. No.

Prepared By JHS Date 9.30.08 Checked By JSD Date 9-30-08

CAP CONCRETE (CY)

LENGTH: (16ft)2 + 5ft = 37ft

WIDTH: 42in

DEPTH: 42in

VOLUME: $(37\text{ft})(3'\text{-}6'')(3'\text{-}6'')\frac{1\text{CY}}{27\text{ft}^3} = 16.79\text{ CY}$

LENGTH = 73'-9" - 37'-0" = 36'-9"

WIDTH = 42in

DEPTH = 42.7in

VOLUME = $(36'\text{-}9'')(3'\text{-}6'')(3'\text{-}8'')\frac{1\text{CY}}{27\text{ft}^3} = 17.5\text{ CY}$

COLUMN CONCRETE (CY)

QTY = 5

DIAMETER: 3'-0"

HEIGHT: ≈ 21ft

VOLUME = $(5)(21\text{ft})\frac{\pi(3')^2}{4}\frac{1\text{CY}}{27\text{ft}^3} = 27.5\text{ CY}$

FOOTING CONCRETE (CY)

LENGTH: 72'-0"

WIDTH: 10'-0"

DEPTH: 45"

VOLUME: $(72')(10')(3'\text{-}9'')\frac{1\text{CY}}{27\text{ft}^3} = 100\text{ CY}$

PILES (LF)

QTY = 48

LENGTH = 35ft + 1' = 36ft

(36ft)(48) = 1728 LF

RUMMEL, KLEPPER & KAHL, LLP
"A Tradition Of Excellence" since 1923

Subject Ramp 1 SR-1 Interchange / Concrete Volume in Abutment Page 1 of 5
Cm. No.
Prepared By DMD Date 9/4/08 Checked By JSW Date 9/25/08

Footing:

Section

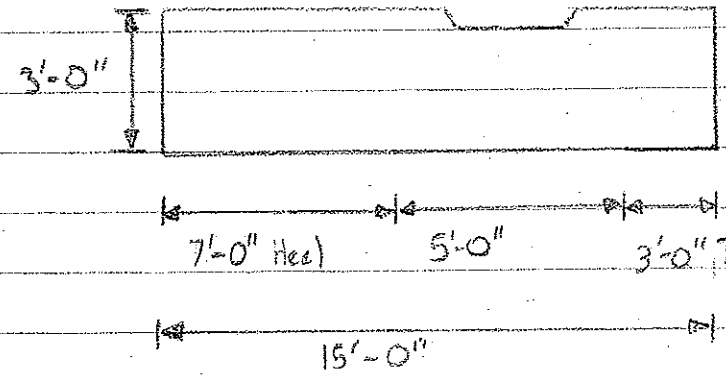

- Cross-Sectional Area = (3.0 ft)(15.0 ft) = 45.0 ft²

- Width (Plan): – Front and Middle row piles have 4' spacing
  – Stem width = 74'-2½" = 74.21'
  – 19 piles can be put inside of a 76'-0" width w/ a pile spacing of 4'-0" within a row
  – There should be at least 1'-6" of cover on the leftmost/rightmost pile groups
  – 6 piles can be put in a 76'-0" width w/ 12'-0" spacing

* Add 1'-6" to the left and right edges of the footing, allowing for sufficient cover ∴
total width = 76'-0" + (2) 1'-6" = 79'-0"

RUMMEL, KLEPPER & KAHL, LLP
"A Tradition Of Excellence" since 1923

Subject Ramp 1 SR-1 Interchange — Page 2 of
Concrete Volume in Abutment — Cm. No.
Prepared By DMD Date 9/14/06 Checked By JSW Date 9-25-08

Footing:

Volume = (79.0 ft)(45.0 ft²) = 3555.0 ft³ = 131.7 C.Y.

Stem:

Section

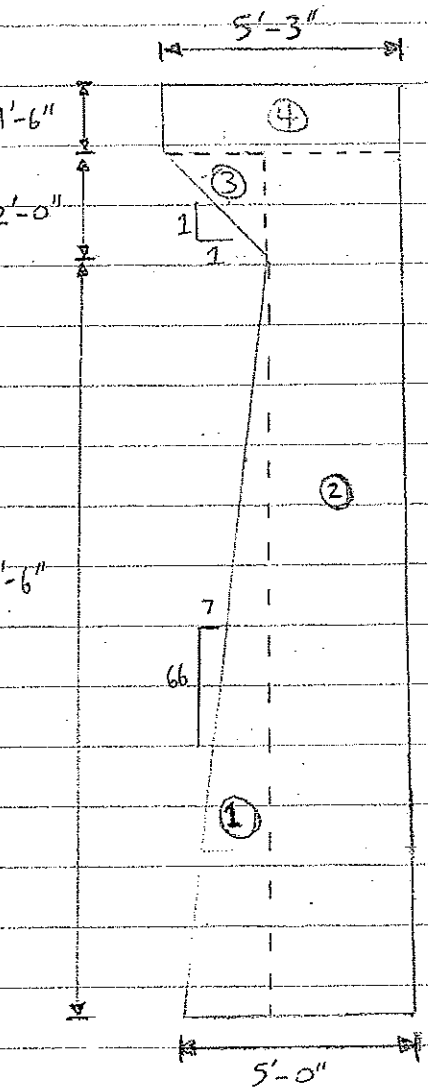

• Cross-Sectional Area :

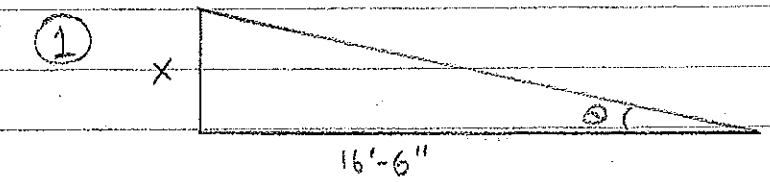

$\theta = \tan^{-1}(7/66)$

$\theta = 6.05^\circ$

$X = (16.5\text{ ft})(\tan(6.05^\circ))$

$X = 1.75\text{ ft}$

$A = \frac{1}{2}(16.5\text{ ft})(1.75\text{ ft}) = 14.44\text{ ft}^2$

(2)

$A = (5\text{ ft} - 1.75\text{ ft})(16.5\text{ ft} + 2.0\text{ ft}) = 60.13\text{ ft}^2$

(3)

$A = \frac{1}{2}(2\text{ ft})(2\text{ ft}) = 2.00\text{ ft}^2$

(4)

$A = (1.5\text{ ft})(5.25\text{ ft}) = 7.88\text{ ft}^2$

$* A_{tot} = 84.45\text{ ft}^2$

Volume $= (84.45\text{ ft}^2)(74.21\text{ ft}) = 6267\text{ ft}^3 = 232.1\text{ C.Y.}$

RUMMEL, KLEPPER & KAHL, LLP
"A Tradition Of Excellence" since 1923

Subject Ramp 1 SR-1 Interchange Page 4 of 5
Concrete Volume in Abutment Cm. No.
Prepared By DMD Date 9/4/08 Checked By JSW Date 9-25-08

Backwall:

Section

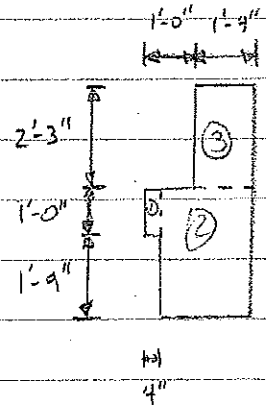

• Cross-Sectional Area:

① $A = (.33\ ft)(1.0\ ft) = 0.33\ ft^2$

② $A = (2.0\ ft)(2.75\ ft) = 5.5\ ft^2$

③ $A = (2.25\ ft)(1.33\ ft) = 2.99\ ft^2$

$* A_{tot} = 8.82\ ft^2$

Volume = $(8.82\ ft^2)(74.21\ ft) = 654.5\ ft^3 = 24.21$ C.Y.

Total Volume of Substructure = 256.3 C.Y. concrete

RUMMEL, KLEPPER & KAHL, LLP
"A Tradition Of Excellence" since 1923

Subject Ramp I SR-1 Interchange Pile Estimate | Page 5 of 5 | Cm. No.

Prepared By DMD Date 9/25/08 Checked By JSW Date 9-26-08

Per Geotech : Abutment A Piles = 42' long
Abutment B Piles = 51' long

Pile Configuration on Each Abutment : (2) Rows of 19 piles
(1) Row of 6 piles

Abutment A :

(44 piles)(45 ft) = 1980 LF

Abutment B :

(44 piles)(60 ft) = 2640 LF

Total = 4620 LF

Delaware Turnpike
SR-1 Interchange
Christiana River to I-95

Preliminary Quantity and Cost Estimate
Structure: SR-1 Over Eagle Run

Item Description	Quantity	Unit	Unit Price	Cost
Demolition of Existing Concrete Deck Slab (8")	60	SY	$ 700.00	$ 42,000.00
Demolition of Existing Concrete Parapet	265	LF	$ 200.00	$ 53,000.00
Prestressed Concrete Box Beam	200	LF	$ 1,250.00	$ 250,000.00
Superstructure Concrete	70	CY	$ 700.00	$ 49,000.00
Parapet Concrete	35	CY	$ 1,500.00	$ 52,500.00
Approach Slab Concrete	35	CY	$ 700.00	$ 24,500.00
Epoxy Coated Reinforcement	36500	LB	$ 1.20	$ 43,800.00
Bearings	6	EA	$ 10,000.00	$ 60,000.00
MOT	1	EA	$ 50,000.00	$ 50,000.00
			Subtotal =	$ 582,800.00
			15% Continency =	$ 87,420.00
			Total =	***$ 671,000.00***

RUMMEL, KLEPPER & KAHL, LLP
"A Tradition Of Excellence" since 1923

Subject SRI INTERCHANGE Page 1 of
QUANTITY ESTIMATE - EAGLE RUN Cm. No.
Prepared By MDM Date 9-24-08 Checked By Date

PRELIMINARY QUANTITY ESTIMATE - SRI OVER EAGLE RUN

① DEMOLITION OF EXISTING CONCRETE SLAB (8"): (SY)

LENGTH = 60' + 70' + 70' + (2)(1' BEYOND E ABUT.) = 202'

WIDTH = 2.5'

(202')(2.5') ÷ 9 = 56.1 SY

SAY **60 SY**

② DEMOLITION OF EXISTING CONCRETE PARAPET: (LF)

ASSUME 30 LF REMOVAL BEYOND END OF DECK

202' + (2)(30') = 262 LF

SAY **265 LF**

③ PRESTRESSED CONCRETE BOX BEAM: (LF)

200 LF

④ SUPERSTRUCTURE CONCRETE: (CY)

(12.1' WIDE)(8 1/2" THICK)(202' LONG) ÷ 27 × 1.20 ← + DIAPHRAGMS, HAUNCH, 9" DECK OVERHANG

= 72.4 CY

SAY **75 CY**

RUMMEL, KLEPPER & KAHL, LLP
"A Tradition Of Excellence" since 1923

Subject SR1 INTERCHANGE Page 2 of
QUANTITY ESTIMATE-EAGLE RUN Jm. No.
Prepared By MDM Date 9-24-08 Checked By Date

⑤ APPROACH SLAB CONCRETE: (cy)

$(30')\left(\frac{15"}{12}\text{ THICK}\right)(12.1')(2) \div 27 = 33.6$ cy

SAY **35 cy**

⑥ EPOXY COATED REINFORCEMENT (LB)

ASSUME 330 LB/cy OF CONCRETE

FOR ITEMS # 4 & 5

$(75+35)(330\text{ LB/cy}) = 36{,}300$ LB

SAY **36,500 LB**

⑦ BEARINGS (EA)

10 EA

4A PARAPET CONCRETE: (cy)

42" TL-5 F-SHAPE

3.45 SF/FT

$(265')(3.45\text{ SF}) \div 27 = 33.9$ cy

SAY **35 cy**

Rummel Klepper & Kahl, LLP		Page of
		Cm. No.
Subject: SR1 Interchange Retaining Wall Estimate		Prepared: JSW 1-09
TS&L Level		Checked:

This sheet is interactive with the quantity sheet. Only enter in green highlighted boxes.

Wall 4

MSE Wall Face

Are of wall taken from USTN files

Area= **5,700** ft^2

Additional Lightweight Fill Quantity in Wedge

Quantity taken from hand calculations

Volume= **0** CY

Additional Fill Quantity in Wedge

Quantity taken from hand calculations

Volume= **0** CY

Lightweight Fill Quantity In Straps

Quantity taken from hand calculations

Volume= **0** CY

Fill Quantity in Straps

Quantity taken from hand calculations

Volume= **3,375** CY

MSE Coping

Length= 276.90 ft

Area= 2.25 ft^2

Rebar/LF= 8 #/LF

Volume of Concrete= **23** CY

LBS. Of Resteel= **2,215** LBS

Wall 5

MSE Wall Face
Are of wall taken from USTN files
Area= **3,950** ft²

Additional Lightweight Fill Quantity in Wedge
Quantity taken from hand calculations
Volume= **0** CY

Additional Fill Quantity in Wedge
Quantity taken from hand calculations
Volume= **0** CY

Lightweight Fill Quantity In Straps
Quantity taken from hand calculations
Volume= **0** CY

Fill Quantity in Straps
Quantity taken from hand calculations
Volume= **480** CY

Traffic Barrier & Moment Slab

Length= 113.31 ft
Area= 12.58 ft²
# Rebar/LF= 68 #/LF

Volume of Concrete= **52.8** CY

LBS. Of Resteel= **7,705** LBS

MSE Coping

Length= 14.79 ft
Area= 2.25 ft²
# Rebar/LF= 8 #/LF

Volume of Concrete= **1** CY

LBS. Of Resteel= **118** LBS

Total Concrete= 54
Total Resteel= 7,824

Wall 6

MSE Wall Face
Are of wall taken from USTN files
Area= **2,890** ft²

Additional Lightweight Fill Quantity in Wedge
Quantity taken from hand calculations
Volume= **0** CY

Additional Fill Quantity in Wedge
Quantity taken from hand calculations
Volume= **0** CY

Lightweight Fill Quantity In Straps
Quantity taken from hand calculations
Volume= **0** CY

Fill Quantity in Straps
Quantity taken from hand calculations
Volume= **1,625** CY

MSE Coping

Length= 176.56 ft
Area= 2.25 ft^2
# Rebar/LF= 8 #/LF

Volume of Concrete= **15** CY

LBS. Of Resteel= **1,413** LBS

Wall 7

MSE Wall Face
Are of wall taken from USTN files

Area= **17,350** ft²

Additional Lightweight Fill Quantity in Wedge
Quantity taken from hand calculations

Volume= **0** CY

Additional Fill Quantity in Wedge
Quantity taken from hand calculations

Volume= **0** CY

Lightweight Fill Quantity In Straps
Quantity taken from hand calculations

Volume= **0** CY

Fill Quantity in Straps
Quantity taken from hand calculations

Volume= **6,265** CY

Traffic Barrier & Moment Slab

Length= 925.08 ft
Area= 12.58 ft²
# Rebar/LF= 68 #/LF

Volume of Concrete= **431.0** CY

LBS. Of Resteel= **62,906** LBS

Wall 8

MSE Wall Face
Are of wall taken from USTN files
Area= **6,670** ft^2

Additional Lightweight Fill Quantity in Wedge
Quantity taken from hand calculations
Volume= **0** CY

Additional Fill Quantity in Wedge
Quantity taken from hand calculations
Volume= **0** CY

Lightweight Fill Quantity In Straps
Quantity taken from hand calculations
Volume= **0** CY

Fill Quantity in Straps
Quantity taken from hand calculations
Volume= **3,980** CY

MSE Coping

Length= 399 ft
Area= 2.25 ft^2
# Rebar/LF= 8 #/LF

Volume of Concrete= **33** CY

LBS. Of Resteel= **3,189** LBS

Wall 9

MSE Wall Face
Are of wall taken from USTN files

Area= **19,275** ft²

Additional Lightweight Fill Quantity in Wedge
Quantity taken from hand calculations

Volume= **0** CY

Additional Fill Quantity in Wedge
Quantity taken from hand calculations

Volume= **0** CY

Lightweight Fill Quantity In Straps
Quantity taken from hand calculations

Volume= **0** CY

Fill Quantity in Straps
Quantity taken from hand calculations

Volume= **3,820** CY

Traffic Barrier & Moment Slab

Length= 872.34 ft
Area= 12.58 ft²
# Rebar/LF= 68 #/LF

Volume of Concrete= **406** CY

LBS. Of Resteel= **59,319** LBS

Wall 10

MSE Wall Face
Are of wall taken from USTN files
Area= **6,800** ft²

Additional Lightweight Fill Quantity in Wedge
Quantity taken from hand calculations
Volume= **0** CY

Additional Fill Quantity in Wedge
Quantity taken from hand calculations
Volume= **0** CY

Lightweight Fill Quantity In Straps
Quantity taken from hand calculations
Volume= **0** CY

Fill Quantity in Straps
Quantity taken from hand calculations
Volume= **7,010** CY

Traffic Barrier & Moment Slab
Length= 354.58 ft
Area= 12.58 ft²
# Rebar/LF= 68 #/LF

Volume of Concrete= **165** CY

LBS. Of Resteel= **24,112** LBS

Wall 12

MSE Wall Face
Are of wall taken from USTN files
Area= **8,900** ft²

Additional Lightweight Fill Quantity in Wedge
Quantity taken from hand calculations
Volume= **0** CY

Additional Fill Quantity in Wedge
Quantity taken from hand calculations
Volume= **0** CY

Lightweight Fill Quantity In Straps
Quantity taken from hand calculations
Volume= **0** CY

Fill Quantity in Straps
Quantity taken from hand calculations
Volume= **0** CY

Traffic Barrier & Moment Slab
Length= 358.38 ft
Area= 12.58 ft²
# Rebar/LF= 68 #/LF

Volume of Concrete= **167** CY

LBS. Of Resteel= **24,370** LBS

Wall 13

MSE Wall Face
Are of wall taken from USTN files
Area= **7,900** ft²

Additional Lightweight Fill Quantity in Wedge
Quantity taken from hand calculations
Volume= **0** CY

Additional Fill Quantity in Wedge
Quantity taken from hand calculations
Volume= **0** CY

Lightweight Fill Quantity In Straps
Quantity taken from hand calculations
Volume= **0** CY

Fill Quantity in Straps
Quantity taken from hand calculations

Volume= **0** CY

Traffic Barrier & Moment Slab

Length= 347.80 ft
Area= 12.58 ft^2
# Rebar/LF= 68 #/LF

Volume of Concrete= **162** CY

LBS. Of Resteel= **23,651** LBS

Wall 14

MSE Wall Face
Are of wall taken from USTN files
Area= **14,660** ft²

Additional Lightweight Fill Quantity in Wedge
Quantity taken from hand calculations
Volume= **0** CY

Additional Fill Quantity in Wedge
Quantity taken from hand calculations
Volume= **0** CY

Lightweight Fill Quantity In Straps
Quantity taken from hand calculations
Volume= **0** CY

Fill Quantity in Straps
Quantity taken from hand calculations
Volume= **0** CY

Traffic Barrier & Moment Slab
Length= 735.00 ft
Area= 12.58 ft²
# Rebar/LF= 68 #/LF

Volume of Concrete= **342** CY

LBS. Of Resteel= **49,980** LBS

Wall 15

MSE Wall Face
Are of wall taken from USTN files
Area= **17,425** ft²

Additional Lightweight Fill Quantity in Wedge
Quantity taken from hand calculations
Volume= **0** CY

Additional Fill Quantity in Wedge
Quantity taken from hand calculations
Volume= **0** CY

Lightweight Fill Quantity In Straps
Quantity taken from hand calculations
Volume= **0** CY

Fill Quantity in Straps
Quantity taken from hand calculations

Volume= **0** CY

Traffic Barrier & Moment Slab

Length= 905.00 ft
Area= 12.58 ft^2
# Rebar/LF= 68 #/LF

Volume of Concrete= **422** CY

LBS. Of Resteel= **61,540** LBS

Wall 16

MSE Wall Face
Are of wall taken from USTN files

Area= **2,190** ft^2

Additional Lightweight Fill Quantity in Wedge
Quantity taken from hand calculations

Volume= **0** CY

Additional Fill Quantity in Wedge
Quantity taken from hand calculations

Volume= **0** CY

Lightweight Fill Quantity In Straps
Quantity taken from hand calculations

Volume= **0** CY

Fill Quantity in Straps
Quantity taken from hand calculations

Volume= **3,475** CY

MSE Coping

Length= 99 ft
Area= 2.25 ft^2
# Rebar/LF= 8 #/LF

Volume of Concrete= **8** CY

LBS. Of Resteel= **790** LBS

RK&K	**Rummel Klepper & Kahl, LLP** Subject: SR1 Interchange Walls 4-16 Preliminary Submittal Estimate	Page Cm. No. Prepared: JSW 1-09 Checked:

This sheet is interactive with the quantity sheet. Only enter unit prices here.

Unit Prices

COPING CONCRETE	1,500	CY
EPOXY COATED REINFORCEMENT	1.20	LB
MSE WALLS	45	SF
ADD. LIGHTWEIGHT FILL IN WEDGE	0	CY
ADD. FILL IN WEDGE	0	CY
LIGHTWEIGHT FILL IN STRAPS	30	CY
FILL IN STRAPS	45	CY

COST ESTIMATE - WALL 4

ITEM	QUANTITY	UNIT	UNIT PRICE	COST
COPING CONCRETE	23	CY	$1,500.00	$34,613
EPOXY COATED REINFORCEMENT	2,215	LB	$1.20	$2,658
MSE WALLS	5,700.00	SF	$45.00	$256,500
ADD. LIGHTWEIGHT FILL IN WEDGE	0.00	CY	$0.00	$0.00
ADD. FILL IN WEDGE	0.00	CY	$0.00	$0.00
LIGHTWEIGHT FILL IN STRAPS	0.00	CY	$30.00	$0.00
FILL IN STRAPS	3375.00	CY	$45.00	$151,875.00
SUBTOTAL				$445,646
15% CONTINGENCY				$66,847
TOTAL				$512,493
MSE Wall Total SF Cost=			71.64	

COST ESTIMATE - WALL 5

ITEM	QUANTITY	UNIT	UNIT PRICE	COST
PARAPET/COPING CONCRETE	54	CY	$1,500.00	$81,042
EPOXY COATED REINFORCEMENT	7,824	LB	$1.20	$9,388
MSE WALLS	3,950	SF	$45.00	$177,750
ADD. LIGHTWEIGHT FILL IN WEDGE	276.90	CY	$0.00	$0.00
ADD. FILL IN WEDGE	23.08	CY	$0.00	$0.00
LIGHTWEIGHT FILL IN STRAPS	0.00	CY	$30.00	$0.00
FILL IN STRAPS	480.00	CY	$45.00	$21,600.00
SUBTOTAL				$289,780
15% CONTINGENCY				$43,467
TOTAL				$333,247
MSE Wall Total SF Cost=			50.47	

COST ESTIMATE - WALL 6

ITEM	QUANTITY	UNIT	UNIT PRICE	COST
COPING CONCRETE	15	CY	$1,500.00	$22,070
EPOXY COATED REINFORCEMENT	1,413	LB	$1.20	$1,695
MSE WALLS	2,890	SF	$45.00	$130,050
ADD. LIGHTWEIGHT FILL IN WEDGE	0.00	CY	$0.00	$0.00
ADD. FILL IN WEDGE	0.00	CY	$0.00	$0.00
LIGHTWEIGHT FILL IN STRAPS	0.00	CY	$30.00	$0.00
FILL IN STRAPS	1625.00	CY	$45.00	$73,125.00
SUBTOTAL				$226,940
15% CONTINGENCY				$34,041
TOTAL				$260,981
	MSE Wall Total SF Cost=		70.30	

COST ESTIMATE - WALL 7

ITEM	QUANTITY	UNIT	UNIT PRICE	COST
PARAPET CONCRETE	431.0203086	CY	$1,500.00	$646,530
EPOXY COATED REINFORCEMENT	62,906	LB	$1.20	$75,487
MSE WALLS	17,350	SF	$45.00	$780,750
ADD. LIGHTWEIGHT FILL IN WEDGE	0.00	CY	$0.00	$0.00
ADD. FILL IN WEDGE	0.00	CY	$0.00	$0.00
LIGHTWEIGHT FILL IN STRAPS	0.00	CY	$30.00	$0.00
FILL IN STRAPS	6265.00	CY	$45.00	$281,925.00
SUBTOTAL				$1,784,692
15% CONTINGENCY				$267,704
TOTAL				$2,052,396
	MSE Wall Total SF Cost=		61.25	

COST ESTIMATE - WALL 8

ITEM	QUANTITY	UNIT	UNIT PRICE	COST
COPING CONCRETE	33	CY	$1,500.00	$49,835
EPOXY COATED REINFORCEMENT	3,189	LB	$1.20	$3,827
MSE WALLS	6,670	SF	$45.00	$300,150
ADD. LIGHTWEIGHT FILL IN WEDGE	0.00	CY	$0.00	$0.00
ADD. FILL IN WEDGE	0.00	CY	$0.00	$0.00
LIGHTWEIGHT FILL IN STRAPS	0.00	CY	$30.00	$0.00
FILL IN STRAPS	3980.00	CY	$45.00	$179,100.00
SUBTOTAL				$532,912
15% CONTINGENCY				$79,937
TOTAL				$612,849
	MSE Wall Total SF Cost=		71.85	

COST ESTIMATE - WALL 9

ITEM	QUANTITY	UNIT	UNIT PRICE	COST
PARAPET CONCRETE	406	CY	$1,500.00	$609,671
EPOXY COATED REINFORCEMENT	59,319	LB	$1.20	$71,183
MSE WALLS	19,275	SF	$45.00	$867,375
ADD. LIGHTWEIGHT FILL IN WEDGE	0.00	CY	$0.00	$0.00
ADD. FILL IN WEDGE	0.00	CY	$0.00	$0.00
LIGHTWEIGHT FILL IN STRAPS	0.00	CY	$30.00	$0.00
FILL IN STRAPS	3820.00	CY	$45.00	$171,900.00
SUBTOTAL				$1,720,130
15% CONTINGENCY				$258,019
TOTAL				$1,978,149
	MSE Wall Total SF Cost=		53.92	

COST ESTIMATE - WALL 10

ITEM	QUANTITY	UNIT	UNIT PRICE	COST
PARAPET CONCRETE	165	CY	$1,500.00	$247,814
EPOXY COATED REINFORCEMENT	24,112	LB	$1.20	$28,934
MSE WALLS	6,800	SF	$45.00	$306,000
ADD. LIGHTWEIGHT FILL IN WEDGE	14.71	CY	$0.00	$0.00
ADD. FILL IN WEDGE	0.00	CY	$0.00	$0.00
LIGHTWEIGHT FILL IN STRAPS	0.00	CY	$30.00	$0.00
FILL IN STRAPS	7010.00	CY	$45.00	$315,450.00
SUBTOTAL				$898,198
15% CONTINGENCY				$134,730
TOTAL				$1,032,928
	MSE Wall Total SF Cost=		91.39	

COST ESTIMATE - WALL 12

ITEM	QUANTITY	UNIT	UNIT PRICE	COST
PARAPET CONCRETE	167	CY	$1,500.00	$250,468
EPOXY COATED REINFORCEMENT	24,370	LB	$1.20	$29,244
MSE WALLS	8,900	SF	$45.00	$400,500
ADD. LIGHTWEIGHT FILL IN WEDGE	0.00	CY	$0.00	$0.00
ADD. FILL IN WEDGE	0.00	CY	$0.00	$0.00
LIGHTWEIGHT FILL IN STRAPS	0.00	CY	$30.00	$0.00
FILL IN STRAPS	0.00	CY	$45.00	$0.00
SUBTOTAL				$680,212
15% CONTINGENCY				$102,032
TOTAL				$782,244
	MSE Wall Total SF Cost=		45.00	

COST ESTIMATE - WALL 13

ITEM	QUANTITY	UNIT	UNIT PRICE	COST
PARAPET CONCRETE	162	CY	$1,500.00	$243,075
EPOXY COATED REINFORCEMENT	23,651	LB	$1.20	$28,381
MSE WALLS	7,900	SF	$45.00	$355,500
ADD. LIGHTWEIGHT FILL IN WEDGE	0.00	CY	$0.00	$0.00
ADD. FILL IN WEDGE	0.00	CY	$0.00	$0.00
LIGHTWEIGHT FILL IN STRAPS	0.00	CY	$30.00	$0.00
FILL IN STRAPS	0.00	CY	$45.00	$0.00
SUBTOTAL				$626,956
15% CONTINGENCY				$94,043
TOTAL				$720,999
MSE Wall Total SF Cost=			45.00	

COST ESTIMATE - WALL 14

ITEM	QUANTITY	UNIT	UNIT PRICE	COST
PARAPET CONCRETE	342	CY	$1,500.00	$513,683
EPOXY COATED REINFORCEMENT	49,980	LB	$1.20	$59,976
MSE WALLS	14,660	SF	$45.00	$659,700
ADD. LIGHTWEIGHT FILL IN WEDGE	0.00	CY	$0.00	$0.00
ADD. FILL IN WEDGE	0.00	CY	$0.00	$0.00
LIGHTWEIGHT FILL IN STRAPS	0.00	CY	$30.00	$0.00
FILL IN STRAPS	0.00	CY	$45.00	$0.00
SUBTOTAL				$1,233,359
15% CONTINGENCY				$185,004
TOTAL				$1,418,363
MSE Wall Total SF Cost=			45.00	

COST ESTIMATE - WALL 15

ITEM	QUANTITY	UNIT	UNIT PRICE	COST
PARAPET CONCRETE	422	CY	$1,500.00	$632,494
EPOXY COATED REINFORCEMENT	61,540	LB	$1.20	$73,848
MSE WALLS	17,425	SF	$45.00	$784,125
ADD. LIGHTWEIGHT FILL IN WEDGE	0.00	CY	$0.00	$0.00
ADD. FILL IN WEDGE	0.00	CY	$0.00	$0.00
LIGHTWEIGHT FILL IN STRAPS	0.00	CY	$30.00	$0.00
FILL IN STRAPS	0.00	CY	$45.00	$0.00
SUBTOTAL				$1,490,467
15% CONTINGENCY				$223,570
TOTAL				$1,714,038
MSE Wall Total SF Cost=			45.00	

COST ESTIMATE - WALL 16

ITEM	QUANTITY	UNIT	UNIT PRICE	COST
COPING CONCRETE	8	CY	$1,500.00	$12,340
EPOXY COATED REINFORCEMENT	790	LB	$1.20	$948
MSE WALLS	2,190	SF	$45.00	$98,550
ADD. LIGHTWEIGHT FILL IN WEDGE	0.00	CY	$0.00	$0.00
ADD. FILL IN WEDGE	0.00	CY	$0.00	$0.00
LIGHTWEIGHT FILL IN STRAPS	0.00	CY	$30.00	$0.00
FILL IN STRAPS	3475.00	CY	$45.00	$156,375.00
SUBTOTAL				$268,213
15% CONTINGENCY				$40,232
TOTAL				$308,444
	MSE Wall Total SF Cost=		116.40	

Total Cost for Walls 4-16= $11,727,131

Rummel Klepper & Kahl, LLP		Page of
		Cm. No.
Subject:	SR1/I-95 Interchange	Prepared: DWD 3/22/2009
	Structures Preliminary Estimate	Checked:

Concrete Classes	
A	4500
B	3000
C	2000
D	4500

Any item ending in 5xx or 6xx will require a special provision
An item ending in xxxxx will require a new item number and description

ROAD A MODIFICATIONS

Item No.	Item Description	Unit	Total Qty	Avg Unit Cost	Total Cost
605002	STEEL STRUCTURES	L.S.	1	$10,000	$10,000
605691	HIGH PERFORMANCE STEEL	LB	0	$0	$0
6xxxxx	FILL VOID BEHIND BARRIER - FLOWABLE FILL	LS	1	$25,000	$25,000

S9			
Quantity	Unit Cost	Total Cost	
1	$10,000	$10,000	all bridges
		$0	bridges requiring HPS
1	$25,000	$25,000	
		$0	all bridges
Subtotal		$35,000	
Contingency	15%	$5,250	
Total		$40,250	