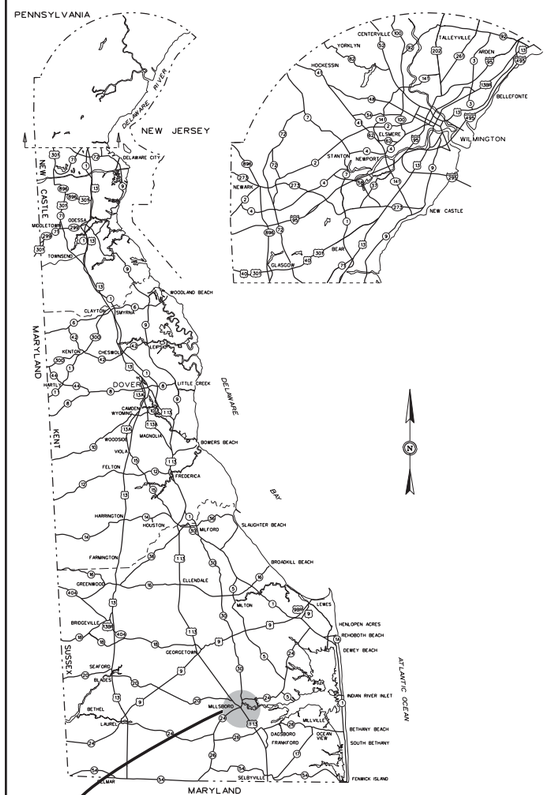

GENERAL LOCATION OF CONTRACT

PREPARED BY
DELDOT – TRANSPORTATION SOLUTIONS
BRIDGE DESIGN

2/21/19
DATE

THIS SEAL APPLIES TO ALL SHEETS BEARING THE "BR" SECTION DESIGNATION.

JONATHAN WALID KARAM LICENSED No. 21169 DELAWARE PROFESSIONAL ENGINEER
SEAL

THE STATE OF DELAWARE
DEPARTMENT OF TRANSPORTATION

U.S. CUSTOMARY UNITS

CONSTRUCTION PLANS FOR:

BR 3–507 ON US113
OVER IRON BRANCH

CONTRACT NUMBER: T201307301
FEDERAL AID PROJECT NUMBER: EBRN–S113(17)

COUNTY: SUSSEX M.R. #: 113

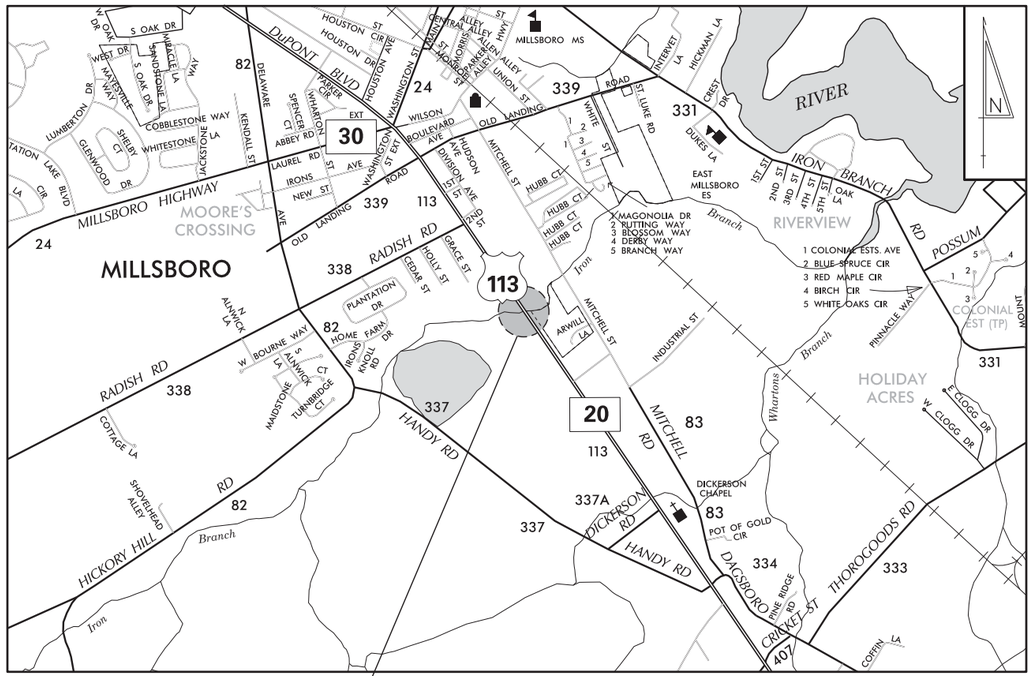

DESIGN DESIGNATION

MRD #: 113	ROAD NAME: SOUTH DUPONT HIGHWAY		
FUNCTIONAL CLASS: PRINCIPAL ARTERIAL		D.H.V. PROJECTED: 2378	YEAR: 2040
TYPE OF CONSTRUCTION: BRIDGE REHABILITATION		DESIGN SPEED: 55 M.P.H.	
A.A.D.T. CURRENT: 30888	YEAR: 2013	TRUCKS: 12 %	
A.A.D.T. PROJECTED: 40000	YEAR: 2040	DIRECTION OF DISTRIBUTION: 58 %	

APPROVED DESIGN EXCEPTIONS

DESIGN PARAMETER	REQUIRED	PROVIDED	DATE

ADDENDA / REVISIONS

ASSOCIATED CONTRACTS

CONTRACT NO.	CONTRACT NAME
845	DAGSBORO CUTOFF TO GEORGETOWN
65-03-004	U.S. ROUTE 113 - DAGSBORO TO ROAD 432

APPROVED FOR ADVERTISEMENT

DIRECTOR OF TRANSPORTATION SOLUTIONS — 02/27/2019 DATE

DISCLAIMER:
THIS PLAN SET IS INTENDED TO BE A GUIDELINE FOR PREPARING A SET OF PLANS INVOLVING THE CONSTRUCTION OF A PRECAST CONCRETE THREE-SIDED FRAME. IT IS NOT INTENDED TO BE A SET OF STANDARDS. THE DESIGN ENGINEER IS STILL RESPONSIBLE FOR PERFORMING THE DESIGN AND NECESSARY DOCUMENTATION USING HIS/HER ENGINEERING JUDGEMENT AND EXPERTISE.

21-FEB-2019
11:37
Y:\SUSSEX\113\Bridge\T201307301\Plans\ti00.dgn

INDEX OF SHEETS		
SECTION	SHEET DESCRIPTION	SHEET NO(S)
BR	TITLE	1
BR	INDEX OF SHEETS	2
BR	ADDENDA AND REVISIONS	3
BR	LEGEND	4
BR	NOTES	5
BR	TYPICAL SECTIONS	6
BR	HORIZONTAL AND VERTICAL CONTROL	7
BR	CONSTRUCTION PLAN	8
BR	PROFILE	9
BR	BRIDGE PLAN, SECTION AND ELEVATION	10
BR	PRECAST BRIDGE DETAILS	11
BR	PRECAST CONCRETE DETAILS	12
BR	CLOSURE POUR DETAILS	13
BR	SOIL BORING LOG	14
BR	ENVIRONMENTAL NOTES	15
BR	ENVIRONMENTAL COMPLIANCE PLAN	16
BR	CONSTRUCTION PHASING, M.O.T. AND EROSION CONTROL PLANS - PHASE 1	17
BR	DETOUR PAVING NOTES (PHASE 1)	18
BR	CONSTRUCTION PHASING, M.O.T. AND EROSION CONTROL PLANS - PHASE 2	19
TS	CONSTRUCTION PHASING, M.O.T. AND EROSION CONTROL PLAN	20-23
BR	CONSTRUCTION PHASING, M.O.T. AND EROSION CONTROL PLANS - PHASE 3	24
BR	CONSTRUCTION PHASING, M.O.T. AND EROSION CONTROL PLANS - PHASE 4	25
TS	VEHICULAR DETOUR PLAN	26
TS	TRUCK DETOUR PLAN	27
BR	UTILITY RELOCATION PLAN	28
BR	SIGNING AND STRIPING PLAN	29

18-MAR-2019
18:24:24
Y:\SUSSEX\113\Bridge\T201307301\Plans\IS01.dgn

ADDENDA / REVISIONS		NOT TO SCALE	BR 3-507 ON US113 OVER IRON BRANCH	CONTRACT	BRIDGE NO. 3-507	INDEX OF SHEETS	SECTION
				T201307301	DESIGNED BY: JWK		BR
				COUNTY			SHEET NO.
				SUSSEX	CHECKED BY: NED		2

ADDENDUM PREPARED BY
DELDOT - TRANSPORTATION SOLUTIONS
XXXXXXXXXXXXXXXXXXXX

THIS SEAL APPLIES TO THE FOLLOWING SHEETS
CHANGED UNDER ADDENDUM #X:
XX, XX-XX, XX

DATE

SEAL

REVISION PREPARED BY
DELDOT - TRANSPORTATION SOLUTIONS
XXXXXXXXXXXXXXXXXXXX

THIS SEAL APPLIES TO THE FOLLOWING SHEETS
CHANGED UNDER REVISION #X:
XX, XX-XX, XX

DATE

SEAL

ADDENDA / REVISIONS	

BR 3-507 ON US113 OVER IRON BRANCH

CONTRACT	BRIDGE NO.	3-507
T201307301	DESIGNED BY: JWK	
COUNTY	CHECKED BY: NED	
SUSSEX		

ADDENDA AND REVISIONS

SECTION: BR
SHEET NO.: 3

18-MAR-2019
15:17
Y:\SUSSEX\113\Bridge\T201307301\Plans\or01.dgn

EXISTING SYMBOLS

DRAINAGE

	DITCH OR STREAM CENTERLINE
	DIRECTIONAL STREAM FLOW ARROW
C.B. / D.I.	DRAINAGE INLET
J.B.	DRAINAGE JUNCTION BOX
D	DRAINAGE MANHOLE
SIZE/TYPE LABEL	DRAINAGE PIPE AND FLOW ARROW
	DRAINAGE PIPE HEADWALL
	RIPRAP - AREA FEATURE
	RIPRAP - LINEAR FEATURE

MANMADE ROADSIDE FEATURES

	BOLLARD - STEEL POLE
	BOLLARD - WOOD POST
(TYPE LABEL)	CURB
(TYPE LABEL)	CURB AND GUTTER
	FENCE - CHAINLINK OR STRANDED
	FENCE - STOCKADE OR SPLIT RAIL
FP	FLAG POLE
	GUARDRAIL - STEEL BEAM
	GUARDRAIL - WIRE ROPE
LAMP	LAMP AND POST - RESIDENTIAL
MB	MAILBOX
PM	PARKING METER AND POST
	PAVEMENT - FLEXIBLE
	PAVEMENT - RIGID
	PILE - BRIDGE
	PILLAR OR MISCELLANEOUS POST
	TRAFFIC SIGN AND POST
	WALL - BRICK OR BLOCK
	WALL - STONE

NATURAL ROADSIDE FEATURES

	GRASS LAWN
	HEDGEROW OR THICKET
	MARSH BOUNDARY LINE
	TREE - CONIFEROUS
	TREE - DECIDUOUS
	TREE STUMP
	SHRUBBERY
WL	DELINEATED WETLAND BOUNDARY LINE
	WOODS LINE BOUNDARY

RIGHT-OF-WAY SYMBOLS

C.M.	PROPERTY MARKER - CONCRETE MON.
I.P.	PROPERTY MARKER - IRON PIPE
100+00	HISTORIC RIGHT-OF-WAY BASELINE
	EXISTING RIGHT-OF-WAY
PP	EXISTING PROPERTY LINE
EASEMENT TYPE	EXISTING EASEMENT
DA	EXISTING DENIAL OF ACCESS
R/W-DA	EXISTING R/W & DENIAL OF ACCESS

SURVEY CONTROL & MONUMENTATION

B.M.	SURVEY BENCHMARK LOCATION
T.P.	SURVEY TIE POINT LOCATION
	SURVEY TRAVERSE POINT
	POINT OF CURVATURE OR TANGENCY
	POINT OF INTERSECTING TANGENTS

UTILITY

	SOIL BORING LOCATION
	UTILITY TEST HOLE LOCATION
TV	CABLE TV DISTRIBUTION BOX
E	ELECTRIC MANHOLE
EM	ELECTRIC METER
E	ELECTRIC TRANSFORMER
	POLE MOUNTED LUMINAIRE
G	GAS MANHOLE
G.M.	GAS METER
G.V.	GAS VALVE
G.P.	GAS PUMP - SERVICE STATION
	RAILROAD TRACKS
S	SANITARY SEWER MANHOLE
S.V.	SANITARY SEWER VALVE
SCO	SANITARY SEWER CLEANOUT OR VENT
S.D.F.	SEPTIC DRAIN FIELD
B	TELEPHONE BOOTH
T	TELEPHONE MANHOLE
T	TELEPHONE TEST POINT
J.W.	TRAFFIC - CONDUIT JUNCTION WELL
	TRAFFIC - LIGHT POLE AND BASE
	TRAFFIC - PEDESTRIAN POLE & BASE
	TRAFFIC - SIGNAL CABINET & BASE
	TRAFFIC - SIGNAL POLE AND BASE
U	UTILITY BOX
	UTILITY POLE GUY WIRE ANCHOR
	UTILITY POLE
F.H.	WATER - FIRE HYDRANT
W.M.	WATER METER
W.V.	WATER VALVE
WELL	WELL HEAD
?	MANHOLE - UNDETERMINED OWNER

UTILITY COMPANY FACILITIES

VER-C	VERIZON BURIED CABLE
VER-C-OH	VERIZON OVERHEAD CABLE
EX-SIG	DELDOT SIGNAL CONDUIT
DP-E	DELMARVA POWER - ELECTRIC
ESNG-G	EASTERN SHORE NATURAL GAS

PROPOSED SYMBOLS

CONSTRUCTION

	CONCRETE SAFETY BARRIER - PERMANENT
BFS	BIOFILTRATION SWALE
	BRICK PATTERNED SURFACE
	BUTT JOINT
CZ	CLEAR ZONE
100+00	CONSTRUCTION BASELINE
CSF	CONSTRUCTION SAFETY FENCE
	CURB, TYPE 1 & TYPE 3
	CURB, TYPE 2
	CURB & GUTTER, TYPE 1
	CURB & GUTTER, TYPE 2
	CURB & GUTTER, TYPE 3
	CURB & GUTTER, TYPE 4
	CURB OPENING - SUMP / ON GRADE
	CURB OPENING WITH SIDEWALK
	DRAINAGE INLET
	DITCH
	FENCE - METAL / FENCE - WOOD
	FLARED END / SAFETY END SECTION
	GUARDRAIL, TYPE 1
	GUARDRAIL, TYPE 2
	GUARDRAIL, TYPE 3
	GUARDRAIL END ANCHORAGE
	GUARDRAIL END TREATMENT, TYPE 1
	GUARDRAIL END TREATMENT, TYPE 2
	GUARDRAIL END TREATMENT, TYPE 3
	IMPACT ATTENUATOR
	JUNCTION BOX - DRAINAGE
LO	LATERAL OFFSET
LOC	LIMIT OF CONSTRUCTION
MB	MAILBOX
	MANHOLE
	PAVEMENT PATCH
	PAVEMENT REMOVAL - TOPSOIL, SEED AND MULCH
	PIPE & DIRECTIONAL FLOW ARROW
	RIPRAP
	P.C.C. SIDEWALK - 4"
	P.C.C. SIDEWALK - 6" (USE 8" DEPTH FOR CHANNELIZATION ISLANDS.)
	UNDERDRAIN
	UNDERDRAIN OUTLET

RIGHT-OF-WAY SYMBOLS

	PROPOSED RIGHT-OF-WAY MONUMENT
DA	PROPOSED DENIAL OF ACCESS
PE	PROPOSED PERMANENT EASEMENT
R/W	PROPOSED RIGHT-OF-WAY
R/W-DA	PROPOSED R/W & DENIAL OF ACCESS
RTE	RIGHT-TO-ENTER
TCE	TEMPORARY CONSTRUCTION EASEMENT
100+00	PROPOSED RIGHT-OF-WAY BASELINE

IDENTIFIERS

AC	ADJUST BY CONTRACTOR
AO	ADJUST BY OTHERS
B	CONCRETE SAFETY BARRIER
C	CURB OR CURB & GUTTER
CJB	CONVERT TO JUNCTION BOX
CMH	CONVERT TO DRAINAGE MANHOLE
CO	CURB OPENING - SUMP / ON GRADE
COSW	CURB OPENING WITH SIDEWALK
PC	PEDESTRIAN CONNECTION / TYPE
PC-N	PEDESTRIAN CONNECTION / TYPE WITHOUT SIDEWALK SURFACE DETECTABLE WARNING SYSTEM
CSF	CONSTRUCTION SAFETY FENCE
DI	DRAINAGE INLET
DND	DO NOT DISTURB
ED	ENERGY DISSIPATOR
F	FENCE
FES	FLARED END SECTION
FFC	FILL WITH FLOWABLE FILL
FS	FILTRATION STRUCTURE
GR	GUARDRAIL
JB	JUNCTION BOX
MH	MANHOLE
M	MONUMENT - RIGHT-OF-WAY
P	PIPE
RLC	RELOCATE BY CONTRACTOR
RLO	RELOCATE BY OTHERS
RLPO	RELOCATE BY PROPERTY OWNER
RMC	REMOVE BY CONTRACTOR
RMTC	REMOVE BY TRAFFIC CONTRACTOR
RMO	REMOVE BY OTHERS
SES	SAFETY END SECTION
UD	UNDERDRAIN / LENGTH
UDO	UNDERDRAIN OUTLET PIPE

LANDSCAPING

LS	LANDSCAPE PLANTINGS
	SHRUBBERY
	CONIFEROUS TREE
	DECIDUOUS TREE

TRAFFIC

ITMS-CON	ITMS CONDUIT
SIG-CON	SIGNAL CONDUIT
	CONDUIT JUNCTION WELL
	LUMINAIRE
	PAVEMENT MARKINGS
	PAVEMENT STRIPING
	TRAFFIC SIGN

PAVEMENT SECTION(S)

	2" SUPERPAVE TYPE C, PG 70-22 (NON-CARBONATE STONE) 3" SUPERPAVE TYPE B, PG 70-22 4" SUPERPAVE TYPE B, PG 64-22 5" SUPERPAVE TYPE BCBC, PG 64-22 8" GRADED AGGREGATE BASE COURSE, TYPE B
	2" SUPERPAVE TYPE C, PG 70-22 (NON-CARBONATE STONE) 8" GRADED AGGREGATE BASE COURSE, TYPE B
	2" MILLING 2" SUPERPAVE TYPE C, PG 70-22 (NON-CARBONATE STONE)

EROSION & SEDIMENT CONTROL

DWBAG	DEWATERING BAG
DWB	DEWATERING BASIN
ED	EARTH DIKE
	INLET SEDIMENT CONTROL
	PERIMETER DIKE/SWALE
PST	PORTABLE SEDIMENT TANK
SBD	SANDBAG DIKE
SB	SANDBAG DIVERSION
	STONE CHECK DAM
SCE	STABILIZED CONSTRUCTION ENTRANCE
SF	SILT FENCE / LENGTH
SF	SILT FENCE
RSF	SILT FENCE - REINFORCED
SP	SUMP PIT
ST	SEDIMENT TRAP / NUMBER
ST	SEDIMENT TRAP
ST	SEDIMENT TRAP WITH INLET AS OUTLET
ST	SEDIMENT TRAP PIPE OUTLET
SW	STILLING WELL
	TEMPORARY SWALE
TSD	TEMPORARY SLOPE DRAIN
T XXX	TURBIDITY CURTAIN / LENGTH
T	TURBIDITY CURTAIN

ADDENDA / REVISIONS

NOT TO SCALE

BR 3-507 ON US113
OVER IRON BRANCH

CONTRACT	BRIDGE NO.	3-507
T201307301	DESIGNED BY: JWK	
COUNTY	CHECKED BY: NED	
SUSSEX		

LEGEND

SECTION: BR
SHEET NO.: 4

19-MAR-2019
11:57
Y:\SUSSEX\113\Bridge\T201307301\Plans\lg.dgn

GENERAL NOTES

1. THIS PROJECT IS TO BE CONSTRUCTED IN ACCORDANCE WITH THE DELAWARE DEPARTMENT OF TRANSPORTATION "STANDARD SPECIFICATIONS", DATED AUGUST 2016 AND THE DELAWARE DEPARTMENT OF TRANSPORTATION "STANDARD CONSTRUCTION DETAILS", DATED 2017, INCLUDING ALL REVISIONS UP TO THE DATE OF ADVERTISEMENT.

2. ELECTRONIC PROJECT FILES THAT WILL BE MADE AVAILABLE TO THE AWARDED CONTRACTOR, INCLUDE:

( )	NONE
( )	ASCII DATA FILES WITH COORDINATES AND ELEVATIONS FOR PROPOSED POINTS AS SELECTED BY THE ENGINEER.
(X)	ALL PLAN SHEETS, IN PDF FORMAT.
( )	EXISTING DIGITAL TERRAIN MODEL, IN .DTM FILE FORMAT, COMPATIBLE WITH SOFTWARE CURRENTLY USED BY DELDOT.
( )	PROPOSED DIGITAL TERRAIN MODEL, IN .DTM FILE FORMAT, COMPATIBLE WITH SOFTWARE CURRENTLY USED BY DELDOT.
( )	DESIGN FILE, IN .DGN FILE FORMAT, CONTAINING ONLY THE PROPOSED 3D TRIANGLES OF THE PROPOSED DIGITAL TERRAIN MODEL (DTM).

NOTE: THE DOCUMENT ENTITLED "RELEASE FOR DELIVERY OF DOCUMENTS IN ELECTRONIC FORM TO A CONTRACTOR" MUST BE SIGNED BY ALL PARTIES PRIOR TO THE DELIVERY OF ANY ELECTRONIC PROJECT FILES.

3. PROJECT FILES THAT WILL BE MADE AVAILABLE TO THE CONTRACTOR, INCLUDE:

(X)	CROSS SECTIONS (WILL BE MADE AVAILABLE TO THE AWARDED CONTRACTOR)

PROJECT NOTES

SECTION 100

4. ANY DAMAGE TO ITEMS NOTED TO BE RELOCATED OR RESET BY THE CONTRACTOR, AT THE DISCRETION OF THE ENGINEER, SHALL BE REPAIRED AND/OR REPLACED IN KIND AT THE CONTRACTOR'S EXPENSE.

5. THE CONTRACTOR SHALL CONTACT THE DELAWARE TMC AT 302-659-4600 PRIOR TO ANY UNMANNED AIRCRAFT VEHICLE (UAV) FLIGHTS. THE CONTRACTOR WILL BE REQUIRED TO PROVIDE THE FOLLOWING INFORMATION: THE REGISTRATION NUMBER OF THE UAV, THE FLIGHT TIME, LOCATION OF THE FLIGHT, THE PILOT'S NAME AND THE PILOT'S CONTACT NUMBER DURING THE FLIGHT.

SECTION 200

6. ITEMS TO BE REMOVED UNDER ITEM *211000 - REMOVAL OF STRUCTURES AND OBSTRUCTIONS SHALL INCLUDE, BUT NOT BE LIMITED TO THE FOLLOWING:
   - CONCRETE ENCASED BEAMS IN THEIR ENTIRETY
   - EXISTING HEADWALLS AND CONCRETE ABUTMENTS
   - EXISTING CONCRETE FRAME, WINGWALLS AND FOOTERS
   - GUARDRAIL ON WEST SIDE OF S.B. LANES (SOUTH DUPONT HIGHWAY) WITHIN PROJECT LIMITS TO NEAREST FULL SECTION OF W-BEAM
   - R-5 AND R-7 RIPRAP AS DESIGNATED IN THE EXISTING RIPRAP LEGEND ON THE CONSTRUCTION PLAN

SECTION 600

7. PORTLAND CEMENT CONCRETE:
   USE PORTLAND CEMENT CONCRETE FOR CAST-IN-PLACE ELEMENTS AS FOLLOWS:
   (f'c = 28-DAY COMPRESSIVE STRENGTH)
   CLASS A WITH 2% HIGH EARLY STRENGTH ADMIXTURE FOR FRAME CLOSURE POUR (f'c = 4.5 ksi)
   - 2% HIGH EARLY STRENGTH ADMIXTURE WILL BE INCIDENTAL TO ITEM 610000.

   USE PORTLAND CEMENT CONCRETE FOR PRECAST ELEMENTS AS FOLLOWS:
   (f'c = 28-DAY COMPRESSIVE STRENGTH)
   PRECAST - WINGWALLS, FRAME, PARAPET, HEADWALL, MOMENT SLAB (f'c = 5 ksi)
   -CHAMFER ALL EXPOSED EDGES ¾" X ¾" UNLESS OTHERWISE NOTED.

8. BAR REINFORCEMENT:
   - REINFORCING STEEL SHALL CONFORM TO AASHTO M31(ASTM A615), GRADE 60.
   - REINFORCING STEEL SHALL HAVE A 3" CLEAR COVER IF CAST AGAINST EARTH OR A 2" CLEAR COVER ELSEWHERE, UNLESS OTHERWISE SPECIFIED ON THE PLANS.
   - ALL REINFORCING STEEL SHALL BE PROTECTED WITH FUSION BONDED EPOXY. EPOXY COATED REINFORCING STEEL SHALL CONFORM TO ASTM A775.
   - ANY FIELD CUTTING OR FIELD BENDING MUST BE APPROVED BY THE ENGINEER. PAYMENT SHALL BE INCIDENTAL TO THE BAR REINFORCEMENT ITEM.
   - GALVANIZED REINFORCING STEEL MAY BE SUBSTITUTED FOR EPOXY-COATED REINFORCING STEEL AT NO ADDITIONAL COST TO DELDOT WITH APPROVAL OF THE BRIDGE DESIGN ENGINEER.
   - WELDING OF REINFORCEMENT DURING FABRICATION OR CONSTRUCTION IS NOT PERMITTED UNLESS SPECIFIED.

9. STATION AND ELEVATION DATA GIVEN FOR DRAINAGE STRUCTURES ARE TO BE APPLIED TO THE CENTER OF THE GRATE FOR INLETS AND TO THE CENTER OF THE STRUCTURE FOR JUNCTION BOXES AND MANHOLES.

SECTION 600 (CONTINUED)

10. DRAINAGE INLET GRATES ADJACENT TO THE ROAD, WITHIN THE PROJECT LIMITS, WHICH ARE NOT TYPE 1 OR TYPE 4, SHALL BE REPLACED. THE ACTUAL LOCATIONS, THE NEED FOR ANY GRATE MODIFICATIONS OR FOR NEW FRAMES SHALL BE DETERMINED BY THE ENGINEER. ALL REPLACED GRATES/FRAMES SHALL BE DELIVERED TO THE NEAREST DISTRICT MAINTENANCE YARD WITH THE COST OF DELIVERY INCIDENTAL TO ITEM 602100 - REPLACING DRAINAGE INLET GRATE(S). FINAL PAYMENT FOR REPLACED GRATES/FRAMES SHALL NOT BE MADE UNTIL RECEIPT OF DELIVERED MATERIALS IS PRODUCED, SIGNED BY A DELDOT MAINTENANCE YARD SUPERVISOR.

SECTION 700

11. ALL PAVED AREAS TO BE RECONSTRUCTED OR WIDENED SHALL BE SAWCUT AT THE POINT WHERE THE NEW PAVEMENT IS TO TIE INTO THE EXISTING PAVEMENT. ALL HOT-MIX AND CONCRETE SAWCUTTING SHALL BE FULL DEPTH, UNLESS OTHERWISE NOTED ON THE PLANS, OR AS DIRECTED BY THE ENGINEER.

SECTION 900

12. THIS PROJECT IS COVERED UNDER AN NPDES GENERAL PERMIT FOR CONSTRUCTION. UNDER THE GENERAL PERMIT, COMPLIANCE WITH DELDOT'S APPROVED SEDIMENT AND STORMWATER MANAGEMENT PLANS WILL CONSTITUTE COMPLIANCE WITH THE NPDES INDUSTRIAL PERMITTING REQUIREMENTS FOR THIS CONSTRUCTION PROJECT. A COPY OF THE NPDES GENERAL PERMIT AND NOI IS KEPT ON FILE IN EACH OF THE CONSTRUCTION OFFICES AND THE DEPARTMENT'S STORMWATER SECTION. A COPY OF THE GENERAL PERMIT OR THE NOI CAN BE OBTAINED UPON REQUEST FROM EITHER THE DEPARTMENT'S STORMWATER ENGINEER OR THE APPROPRIATE CONSTRUCTION ENGINEER.

13. USE OF WELL POINTS:
    SOIL BORINGS HAVE IDENTIFIED POTENTIAL ISSUES WITH A HIGH WATER TABLE AND RUNNING SANDS. IF NEEDED, AND WITH APPROVAL OF THE ENGINEER, A WELL POINT SYSTEM SHALL BE USED TO LOWER GROUNDWATER ELEVATION. PAYMENT UNDER ITEM *906005 - WELL POINT SYSTEM.

MISCELLANEOUS

14. RIPRAP NOTES:
    - REMOVE AND STOCKPILE EXISTING R-5 AND R-7 RIPRAP WITHIN THE LIMITS DEFINED IN NOTES (A), (B) AND (C) TO A LOCATION APPROVED BY THE ENGINEER.

    (A) 5 FEET UPSTREAM OF THE PROPOSED FRAME TO 5 FEET DOWNSTREAM OF THE CLOSURE POUR.
    (B) 10 FEET FROM THE LIMITS OF THE EXISTING OR PROPOSED WINGWALLS, WHICHEVER IS GREATER.
    (C) 5 FEET FROM BOTH SIDES OF THE PROPOSED FOOTERS AS SHOWN SHADED ON DWG NO. BR-10.

    - FOR AREAS BELOW THE OHW LINE, PLACE 2'-6" REUSED R-7 RIPRAP (ITEM *707013) ON 6" DE *3 STONE (ITEM *302002) ON GEOTEXTILES, RIPRAP (ITEM *708003). ALL R-7 RIPRAP IS TO BE REUSED AND ANY REMIANING VOIDS MUST BE FILLED WITH REUSED R-5 RIPRAP (ITEM *707011).
    - FOR AREAS ABOVE THE OHW LINE, PLACE 1'-6" REUSED R-5 RIPRAP (ITEM *707011) ON 6" DE *3 STONE (ITEM *302002) ON GEOTEXTILES, RIPRAP (ITEM *708003). ANY REMAINING VOIDS MUST BE FILLED WITH NEW R-5 RIPRAP (*707011).
    - REMOVING AND STOCKPILING THE EXISTING RIPRAP WILL BE PAID FOR UNDER RESPECTIVE RIPRAP ITEM (ITEMS *707011 AND *707013)

15. THE CONTRACTOR SHALL CONTACT THE CHIEF OF SCHEDULING FOR DART FIRST STATE, 14 DAYS PRIOR TO THE START OF CONSTRUCTION AT 302-576-6191 OR BY EMAIL NOTIFICATION TO DOT_Detours@state.de.us.

16. DESIGN SPECIFICATIONS:
    (A) DELDOT BRIDGE DESIGN MANUAL, 2017 EDITION
    (B) AASHTO LRFD BRIDGE SPECIFICATIONS, 2014, 7TH EDITION, CUSTOMARY U.S. UNITS INCLUDING 2015 AND 2016 INTERIMS.
    (C) PROVIDE MATERIALS AND PERFORM WORK IN ACCORDANCE WITH THE DELDOT STANDARD SPECIFICATIONS, AUGUST 2016.

17. LOADING:
    -DESIGN LIVE LOADS INCLUDE HL-93 LOADING.

18. EXISTING CONDITIONS:
    - ALL EXISTING DIMENSIONS AND ELEVATIONS SHOWN ARE BASED ON THE BEST AVAILABLE INFORMATION AND ARE APPROXIMATE ONLY. THE CONTRACTOR SHALL FIELD VERIFY ALL EXISTING DIMENSIONS, GEOMETRY, AND ELEVATIONS AS NECESSARY PRIOR TO ORDERING ANY MATERIALS AND COMMENCING CONSTRUCTION TO ENSURE PROPER FIT OF THE PROPOSED CONSTRUCTION. PAYMENT SHALL BE INCIDENTAL TO ITEM *763501 - CONSTRUCTION ENGINEERING.
    - THE CONTRACTOR SHALL NOT CONSIDER ANY OF THE DATA ON THE EXISTING STRUCTURE SUPPLIED IN THE ORIGINAL DESIGN DRAWINGS OR MADE AVAILABLE BY THE DEPARTMENT OR ITS AUTHORIZED AGENTS AS POSITIVE REPRESENTATIONS OF ANY OF THE CONDITIONS THAT WILL BE ENCOUNTERED IN THE FIELD.

19. HYDRAULIC DATA:

DRAINAGE AREA:	7.85 sq. miles	DESIGN FREQ.: 50 YEARS	
DESIGN DISCHARGE:	927 cfs	100-YEAR DISCHARGE:	1141 cfs
EXISTING (DESIGN STORM) WSE:	16.29 ft	PROPOSED (DESIGN STORM) WSE:	15.35 ft
EXISTING (DESIGN STORM) VELOCITY:	8.43 fps	PROPOSED (DESIGN STORM) VELOCITY:	7.13 fps
EXISTING 100-YEAR WSE:	17.03 ft	PROPOSED 100-YEAR WSE:	16.50 ft
EXISTING 100-YEAR VELOCITY:	8.94 fps	PROPOSED 100-YEAR VELOCITY:	8.75 fps
EXISTING WATERWAY OPENING:	110.00 sq. ft	PROPOSED WATERWAY OPENING:	130.00 sq. ft

MISCELLANEOUS (CONTINUED)

20. SCOUR ANALYSIS:
    SCOUR DESIGN FREQUENCY: 200 YEAR
    SCOUR DESIGN FLOOD DISCHARGE: 1389 cfs
    SCOUR DESIGN FLOOD VELOCITY: 9.04 fps (AT BRIDGE OUTLET)
    WATER SURFACE ELEVATION: 17.06 ft (IMMEDIATELY UPSTREAM OF BRIDGE)

    SCOUR COUNTERMEASURES HAVE BEEN DESIGNED FOR THE SCOUR DESIGN FLOOD IN ACCORDANCE WITH HEC 23 - BRIDGE SCOUR AND STREAM INSTABILITY COUNTERMEASURES AND HEC 14 - HYDRAULIC DESIGN OF ENERGY DISSIPATORS FOR CULVERTS AND CHANNELS.

21. UTILITIES:
    SEE UTILITY STATEMENT FOR FURTHER INFORMATION ON UTILITY COORDINATION.

22. SEE SHEET DWG NO. BR-18 FOR INFORMATION ON MILL AND OVERLAY REQUIRED TO BE COMPLETE BEFORE CLOSURE OF US113 SOUTHBOUND.

23. APPROXIMATELY 2'-0" OF SEDIMENT WILL BE REMOVED FROM THE CHANNEL WITHIN THE ENTIRE FRAME LIMITS. PAYMENT SHALL BE INCIDENTAL TO ITEM *203000 - CHANNEL EXCAVATION. ONCE THE SEDIMENT IS REMOVED, 1'-0" OF CHANNEL BED FILL (ITEM *707500) WILL BE PLACED.

LOAD RATING SUMMARY

DESIGN VEHICLE	RATING FACTOR	RATING WEIGHT (TON)	CONTROLLING MEMBER	CONTROLLING POINT	LOAD EFFECT
HL-93 TRUCK (INVENTORY)	1.21	43.43	CULVERT	105	FLEXURE
HL-93 TANDEM (INVENTORY)	1.02	25.56	CULVERT	105	FLEXURE
HS-20 (INVENTORY)	1.21	43.43	CULVERT	105	FLEXURE
HL-93 TRUCK (OPERATING)	1.56	56.29	CULVERT	105	FLEXURE
HL-93 TANDEM (OPERATING)	1.32	33.12	CULVERT	105	FLEXURE
HS-20 (OPERATING)	1.56	56.29	CULVERT	105	FLEXURE
DE S220	2.25	45.01	CULVERT	105	FLEXURE
DE S335	1.24	43.37	CULVERT	105	FLEXURE
DE S437	1.26	46.23	CULVERT	105	FLEXURE
DE T330	2.25	67.51	CULVERT	105	FLEXURE
DE T435	1.67	58.41	CULVERT	105	FLEXURE
DE T540	1.67	66.79	CULVERT	105	FLEXURE

ADDENDA / REVISIONS		NOT TO SCALE	BR 3-507 ON US113 OVER IRON BRANCH	CONTRACT	BRIDGE NO. 3-507	NOTES	SECTION
				T201307301	DESIGNED BY: JWK		BR
				COUNTY	CHECKED BY: NED		SHEET NO.
				SUSSEX			5

19-MAR-2019
15:52
Y:\SUSSEX\113\Bridge\T201307301\Plans\pn.dgn

LEGEND

- (A) ITEM *401045 - SUPERPAVE TYPE C, PG 70-22 (NON-CARBONATE STONE)
- (B) ITEM *401015 - SUPERPAVE TYPE B, PG 70-22
- (C) ITEM *401014 - SUPERPAVE TYPE B, PG 64-22
- (D) ITEM *401021 - SUPERPAVE TYPE BCBC, PG 64-22
- (E) ITEM *301001 - GRADED AGGREGATE BASE COURSE, TYPE B
- (F) ITEM *720021 - GALVANIZED STEEL BEAM GUARDRAIL, TYPE 1-31
- (G) ITEM *908004 - TOPSOIL 6"
- (H) ITEM *908020 - EROSION CONTROL BLANKET MULCH
- (I) ITEM *908019 - PERMANENT GRASS SEEDING, STREAMBANK
- (J) ITEM *209006 - BORROW, TYPE F
- (K) ITEM *707015 - RIPRAP, R-4 (TON)
- (L) ITEM *302002 - DELAWARE NO. 3 STONE
- (M) ITEM *708003 - GEOTEXTILES, RIPRAP
- (N) ITEM *760010 - PAVEMENT MILLING, BITUMINOUS CONCRETE PAVEMENT

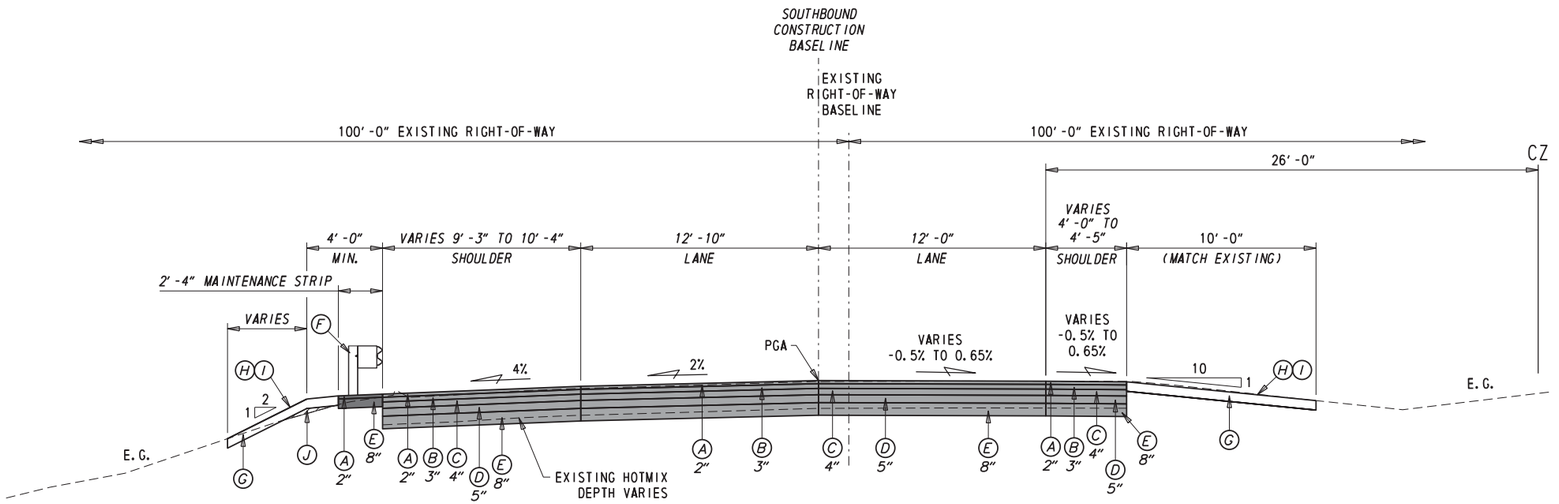

TYPICAL PROPOSED ROADWAY SECTION

STATION 3+02.00 TO STATION 3+87.00
(FULL DEPTH)

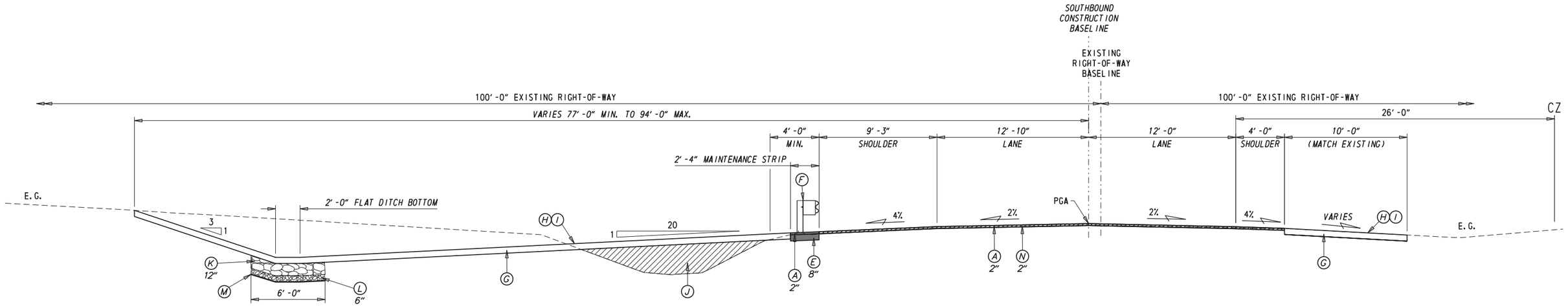

TYPICAL PROPOSED ROADWAY SECTION

STATION 1+25.00 TO STATION 3+02.00
(MILL AND OVERLAY)

MATERIAL	LIFT THICKNESS	
	MINIMUM	MAXIMUM
BITUMINOUS CONCRETE, TYPE 'C'	1.25"	2"
BITUMINOUS CONCRETE, TYPE 'B'	2.25"	4"
BITUMINOUS CONCRETE BASE COURSE	3"	6"
GRADED AGGREGATE BASE COURSE	-	8"

ADDENDA / REVISIONS	

SCALE
0 4 8 12
FEET

BR 3-507 ON US113 OVER IRON BRANCH

CONTRACT	BRIDGE NO.	3-507	SECTION
T201307301	DESIGNED BY: JWK		BR
COUNTY			SHEET NO.
SUSSEX	CHECKED BY: NED		6

TYPICAL SECTIONS

18-MAR-2019
Y:\SUSSEX\113\Bridge\T201307301\Plans\TSO1-partial replacement.dgn

Element: Southbound Construction Baseline Circular Curve

PC (10001)	3+48.33	210433.0942	692825.6604
PI (10002)	4+74.29	210536.8068	692754.1684
CC (10100)		209140.8063	690950.9528
PT (10003)	6+00.00	210632.0005	692671.6725

Radius:	2276.9578
Delta:	6° 19' 58.73" Left
Degree of Curvature (Arc):	2° 30' 58.79"
Length:	251.6752
Tangent:	125.9659
Chord:	251.5471
Middle Ordinate:	3.4764
External:	3.4817
Tangent Direction:	N 34° 34' 46.47" W
Radial Direction:	N 55° 25' 13.53" E
Chord Direction:	N 37° 44' 45.83" W
Radial Direction:	N 49° 05' 14.80" E
Tangent Direction:	N 40° 54' 45.20" W

HORIZONTAL / VERTICAL CONTROL DATA

POINT	STATION	OFFSET	NORTHING	EASTING	ELEVATION
TP #4	4+43.69	-91.716	210455.2840	692696.6410	17.78
TP #8	4+31.75	100.653	210561.0200	692857.7900	14.05
TP #40	5+52.65	32.095	210616.4070	692726.9960	15.45
TP #41	0+65.43	84.405	210246.5739	693054.4983	17.76

EXISTING R/W BASELINE CONTROL

POINT	STATION	OFFSET	NORTHING	EASTING
60000	104+00.00	0.00	210020.8422	693107.1316
60001	113+00.00	0.00	210765.1361	692601.1409

CONSTRUCTION BASELINE CONTROL

POINT	STATION	OFFSET	NORTHING	EASTING
10000	0+00.00	0.00	210145.0149	693021.4728
10001	3+48.33	0.00	210433.0942	692825.6604
10002	4+74.29	0.00	210536.8068	692754.1684
10003	6+00.00	0.00	210632.0005	692671.6725

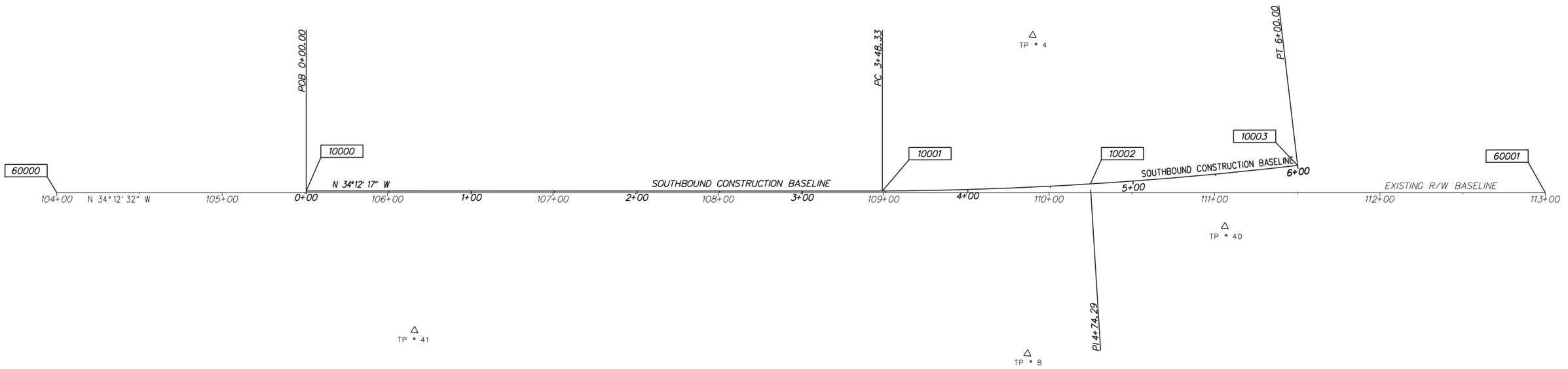

DATUM REFERENCE:

HORIZONTAL - THIS PROJECT IS REFERENCED TO THE DELAWARE STATE PLANE COORDINATE SYSTEM (NAD 83/91).

VERTICAL - THIS PROJECT IS REFERENCED TO NAVD 88.

ADDENDA / REVISIONS		SCALE	BR 3-507 ON US113 OVER IRON BRANCH	CONTRACT	BRIDGE NO. 3-507	HORIZONTAL AND VERTICAL CONTROL	SECTION
		0 30 60 90 FEET		T201307301	DESIGNED BY: JWK		BR
				COUNTY			SHEET NO.
				SUSSEX	CHECKED BY: NED		7

18-MAR-2019
Y:\SUSSEX\113\Bridge\T201307301\Plans\cp.dgn

GUARDRAIL SCHEDULE

NO.	ITEM DESCRIPTION / TYPE	BEGIN STA.	OFFSET	LENGTH
1	END ANCHORAGE 31	1+39.00	-22.10	14.00
2	STEEL BEAM GUARDRAIL, TYPE 1-31	1+53.00	-22.10	150.00
3	GUARDRAIL TO BARRIER CONNECTION (EXIT TYPE 31)	3+03.00	-22.10	14.23
4	GUARDRAIL TO BARRIER CONNECTION, APPROACH TYPE 1-31	3+34.00	-22.10	27.00
5	W-BEAM, TYPE 1-27 TO TYPE 1-31 TRANSITION SECTION*	3+61.00	-22.10	25.00

* FOR GUARDRAIL SCHEDULE'S IDENTIFIER 5, THE TRANSITION FROM TYPE 1-27 TO TYPE 1-31 WILL BE PAID FOR UNDER ITEM 720021

DRAINAGE INLET SCHEDULE

NO.	STATION	OFFSET	BOX SIZE	GRATE	T.G. EL.	INV. EL.
1	1+29.19	-20.36	66" x 48"	1	17.25	13.50
2	1+29.19	-32.52	66" x 66"	1	16.65	12.50
3	2+94.75	-32.52	66" x 66"	1	15.57	10.50

DRAINAGE PIPE SCHEDULE

NO.	SIZE / TYPE	CLASS	LENGTH	SLOPE	INT. EL.	DIS. EL.
1	24" RCP	III	8.00	0.0287	14.23	14.00
2	24" RCP	III	8.00	0.0625	14.50	14.00
3	36" RCP	III	160.00	0.0125	13.00	11.00
4	36" RCP	III	16.00	0.077	11.00	9.35

SOIL BORING SCHEDULE

NO.	STATION	OFFSET	DESCRIPTION
IB-1	108+51.19	76.51'	SEE BORING LOG
IB-2	108+47.54	18.70'	SEE BORING LOG
IB-3	108+49.35	-18.16'	SEE BORING LOG
IB-4	108+96.08	73.73'	SEE BORING LOG
IB-5	108+98.00	20.87'	SEE BORING LOG
IB-6	109+03.03	-18.19'	SEE BORING LOG

EXISTING RIPRAP LEGEND

	EXISTING RIPRAP TO REMAIN IN PLACE
	EXISTING RIPRAP TO BE REMOVED, STOCKPILED, AND RE-USED

* SEE PROJECT NOTES FOR CLARITY

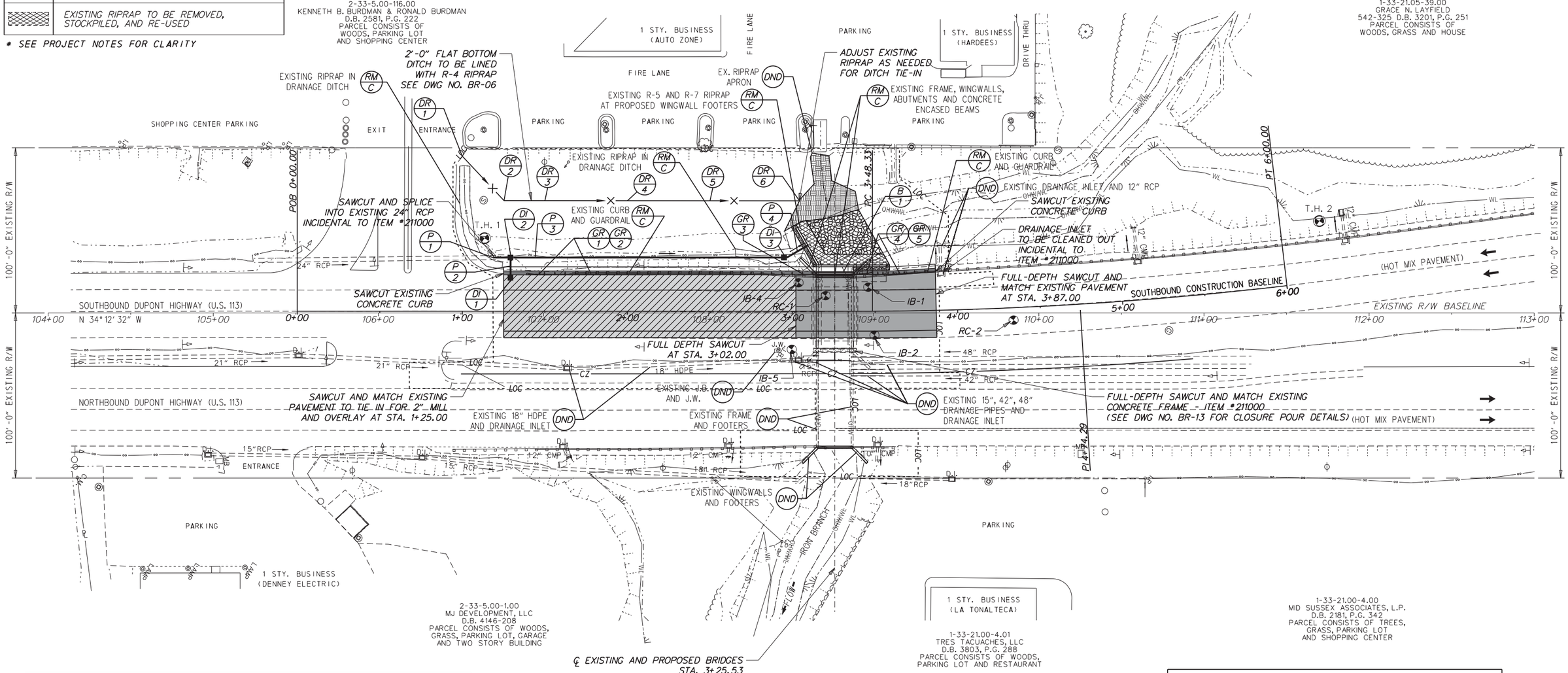

DITCH RELOCATION SCHEDULE

NO.	STATION	OFFSET	BOT. ELV.	WIDTH	FORE SLOPE	BACK SLOPE
1	1+00.00	-94.00'	18.93	8.00'	4:1 TO 3:1	4:1 TO 1:1
2	1+25.00	-67.00'	15.09	2.00'	20:1	3:1
3	1+50.00	-67.00'	14.93	2.00'	20:1	3:1
4	2+00.00	-67.00'	14.59	2.00'	20:1	3:1
5	2+50.00	-67.00'	14.26	2.00'	20:1	3:1
6	3+04.00	-67.00'	13.90	2.00'	20:1	3:1

BARRIER SCHEDULE

NO.	ITEM DESCRIPTION / TYPE	LENGTH
1	PRECAST CONCRETE BARRIER (TL-4)	22.33

* SEE DWG NO. BR-12 FOR PRECAST CONCRETE BARRIER DETAILS

ROADWAY CORE SCHEDULE

NO.	STATION	OFFSET	DESCRIPTION
RC-1	3+20.00	-9.25'	SOUTH BOUND = 10.5" HMA
RC-2	4+33.00	7.53'	SOUTH BOUND = 12.5" HMA

ADDENDA / REVISIONS	

SCALE 0 30 60 90 FEET

BR 3-507 ON US113 OVER IRON BRANCH

CONTRACT	BRIDGE NO. 3-507	SECTION
T201307301	DESIGNED BY: JWK	BR
COUNTY	CHECKED BY: NED	SHEET NO.
SUSSEX		8

CONSTRUCTION PLAN

19-MAR-2019
11:15
Y:\SUSSEX\113\Bridge\T201307301\Plans\cp.dgn

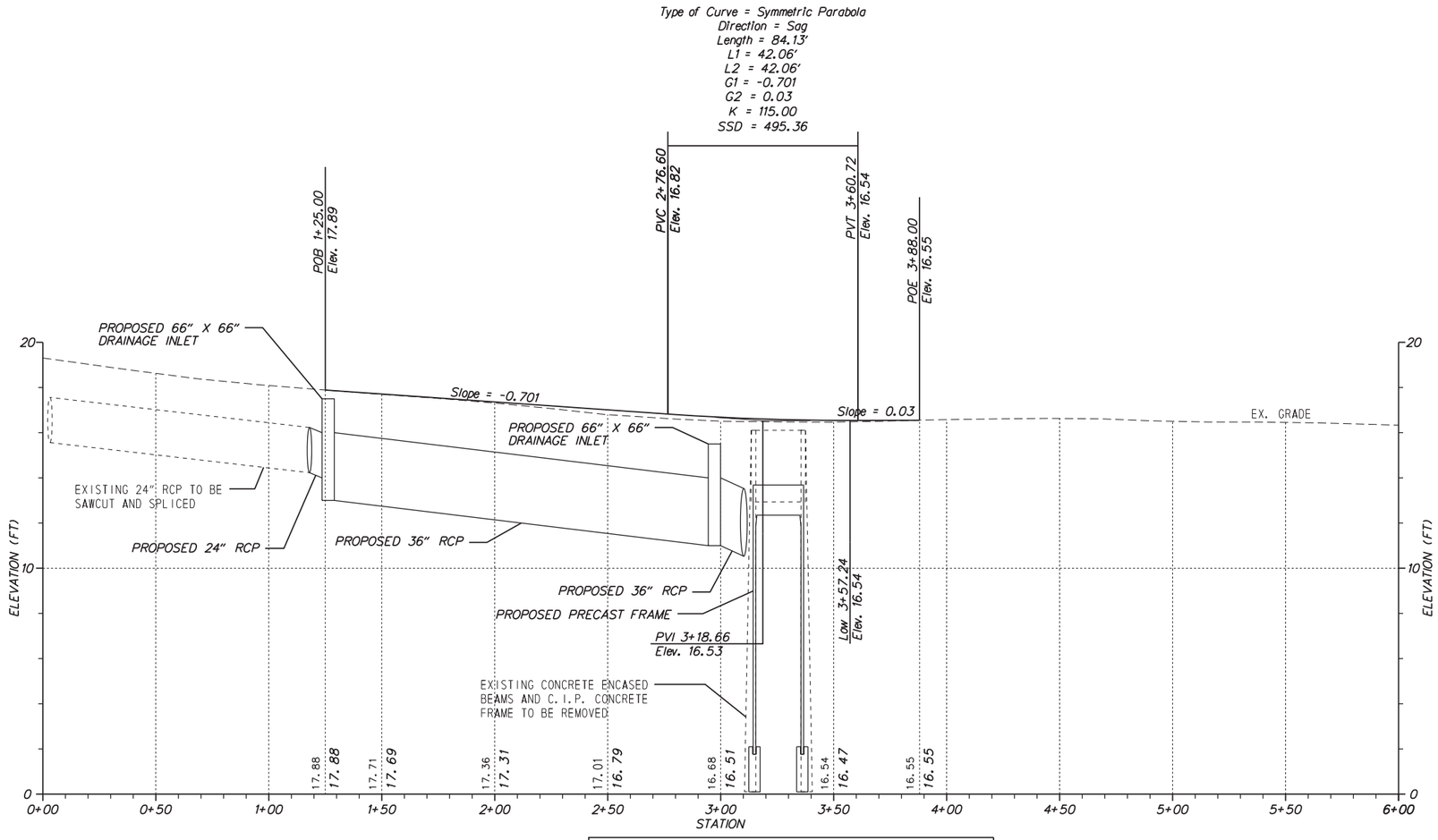

US113 SOUTHBOUND (M.R. #S113)

VERTICAL SCALE FEET 0 3 6 9

ADDENDA / REVISIONS		SCALE	BR 3-507 ON US113 OVER IRON BRANCH	CONTRACT	BRIDGE NO. 3-507	PROFILE	SECTION
		0 30 60 90 FEET		T201307301	DESIGNED BY: JWK		BR
				COUNTY	CHECKED BY: NED		SHEET NO.
				SUSSEX			9

18-MAR-2019
18:50
Y:\SUSSEX\113\Bridge\T201307301\Plans\PF01.dgn

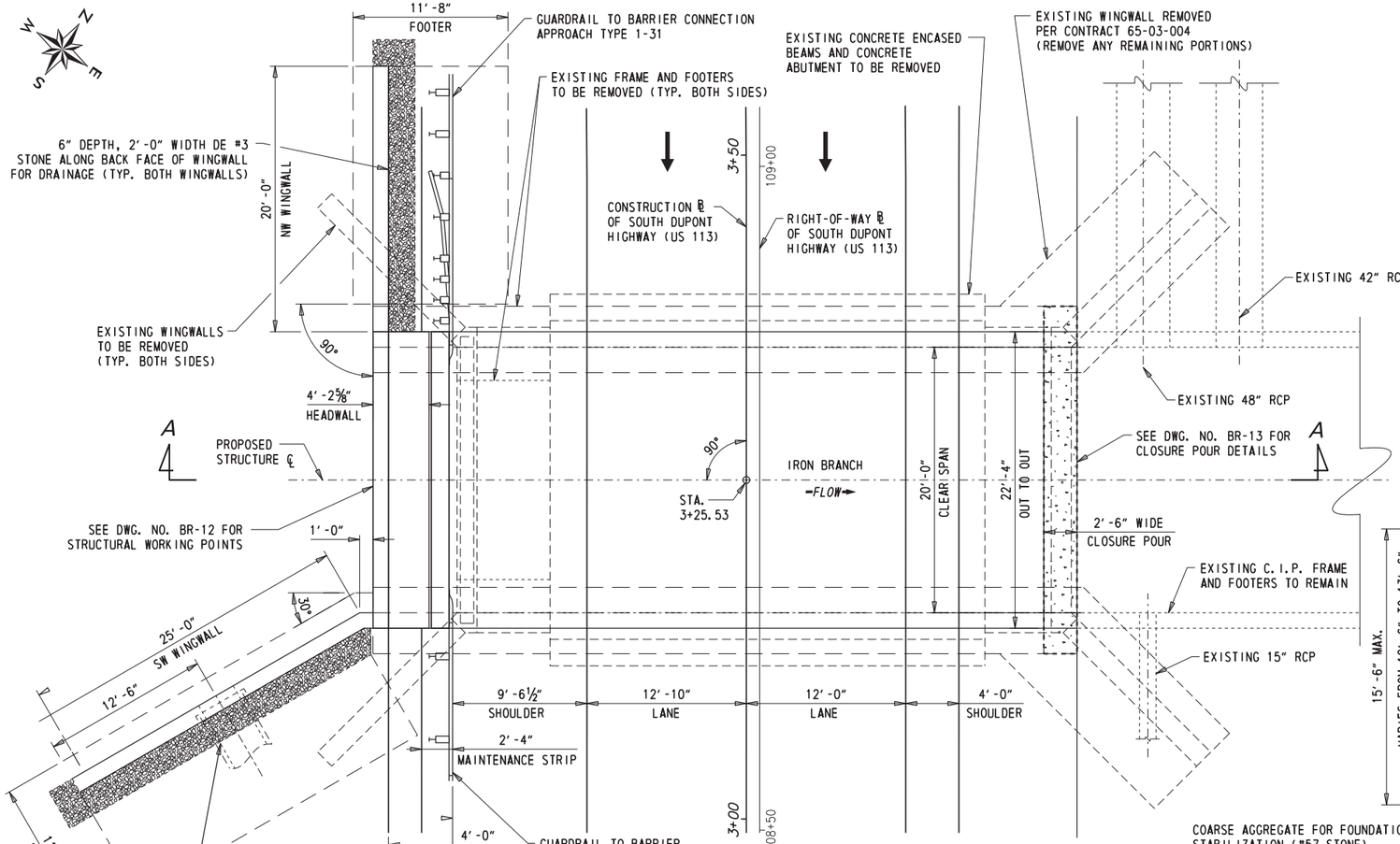

BRIDGE PLAN

1/16" = 1'-0"

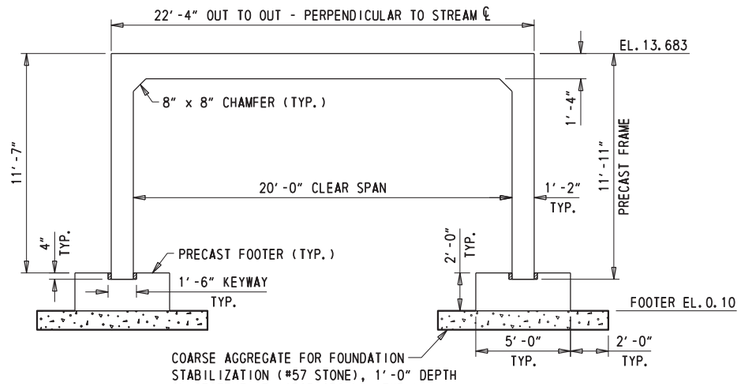

TYPICAL PRECAST FRAME SECTION

¼" = 1'-0"

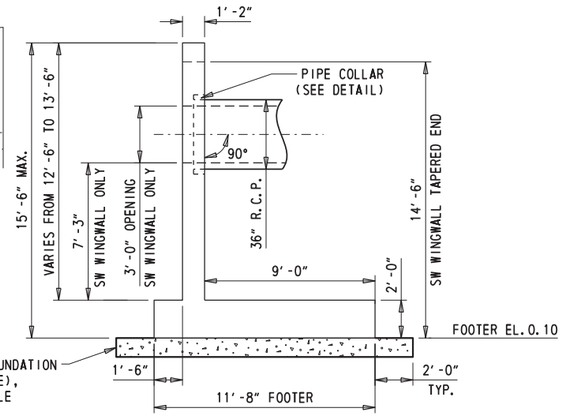

TYPICAL PRECAST WINGWALL SECTION

¼" = 1'-0"

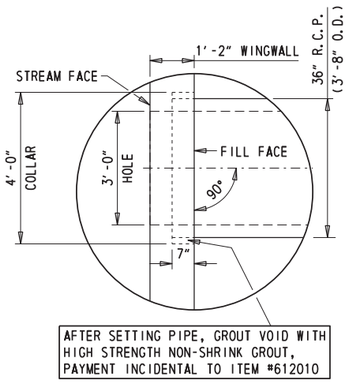

PIPE COLLAR DETAIL

(SOUTHWEST WINGWALL ONLY)

½" = 1'-0"

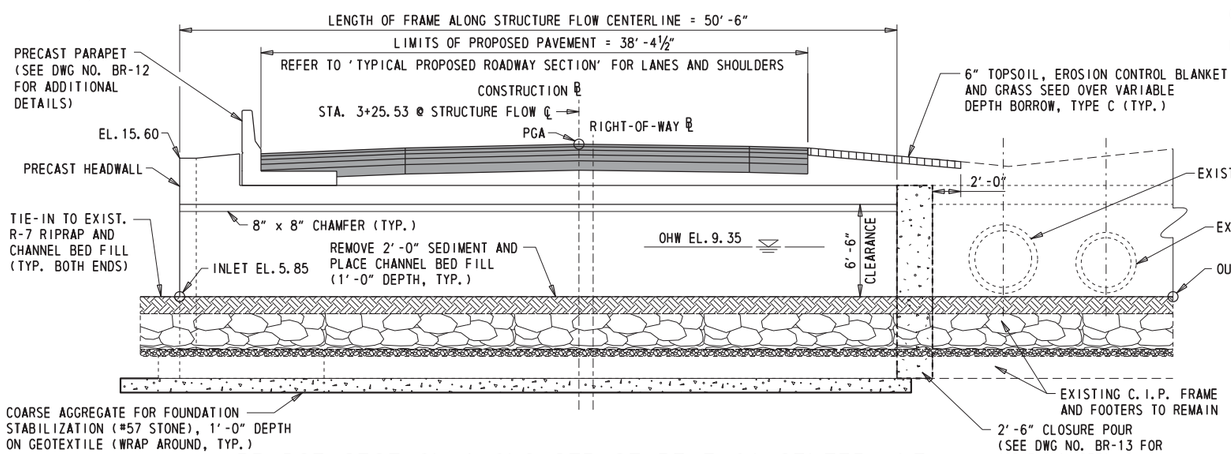

BRIDGE SECTION ALONG STRUCTURE FLOW CENTERLINE

(SECTION A-A)

1/16" = 1'-0"

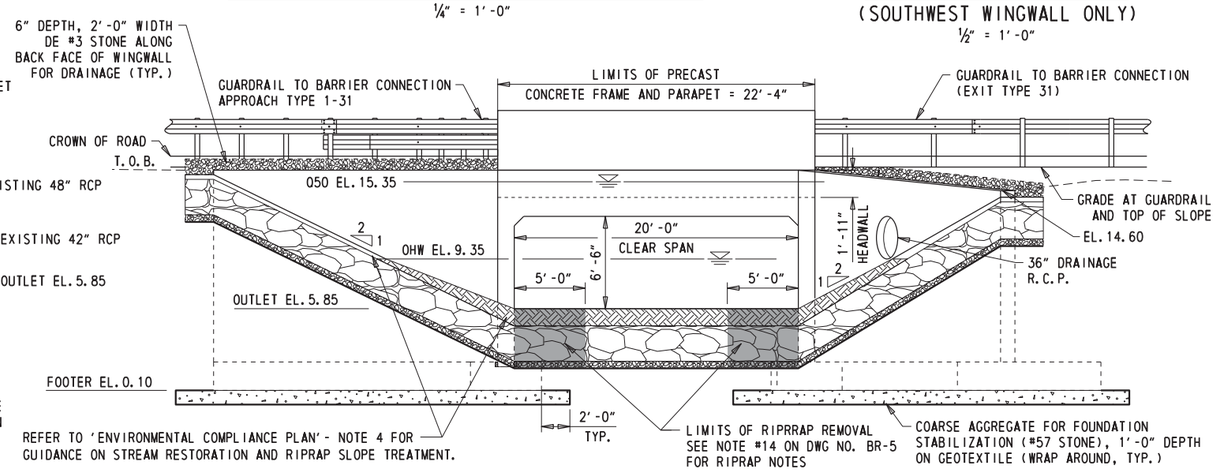

UPSTREAM END ELEVATION

1/16" = 1'-0"

ADDENDA / REVISIONS		SCALE: AS NOTED	BR 3-507 ON US113 OVER IRON BRANCH	CONTRACT	BRIDGE NO. 3-507	BRIDGE PLAN, SECTION AND ELEVATION	SECTION
				T201307301	DESIGNED BY: JWK		BR
				COUNTY	CHECKED BY: NED		SHEET NO.
				SUSSEX			10

19-MAR-2019
Y:\SUSSEX\113\Bridge\T201307301\Plans\pe.dgn

LEGEND	
E.F. -	EACH FACE
F.F. -	FILL FACE
N.E. -	NORTHEAST
N.W. -	NORTHWEST
S.E. -	SOUTHEAST
S.F. -	STREAM FACE
S.W. -	SOUTHWEST
W.W. -	WINGWALL

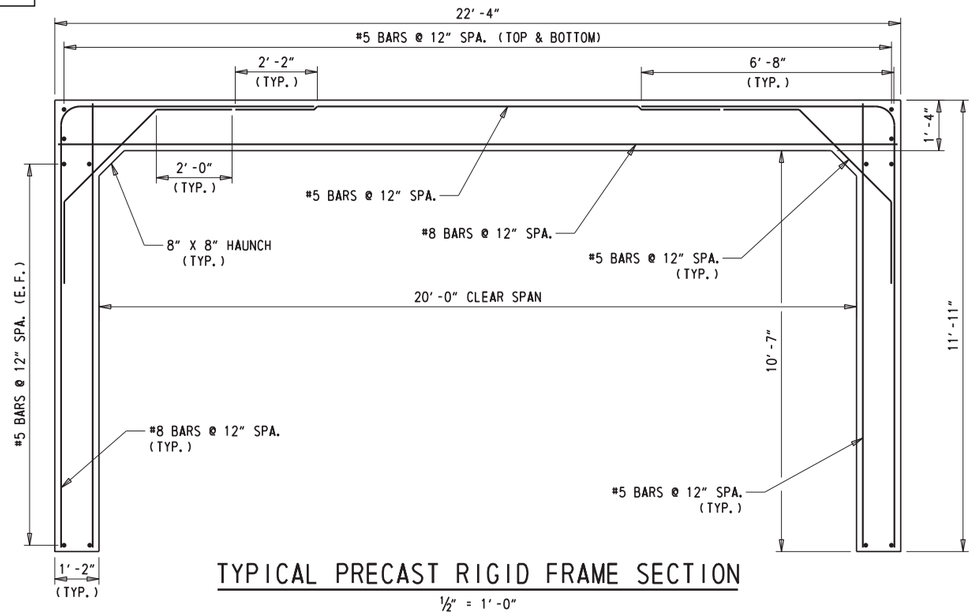

TYPICAL PRECAST RIGID FRAME SECTION

½″ = 1′-0″

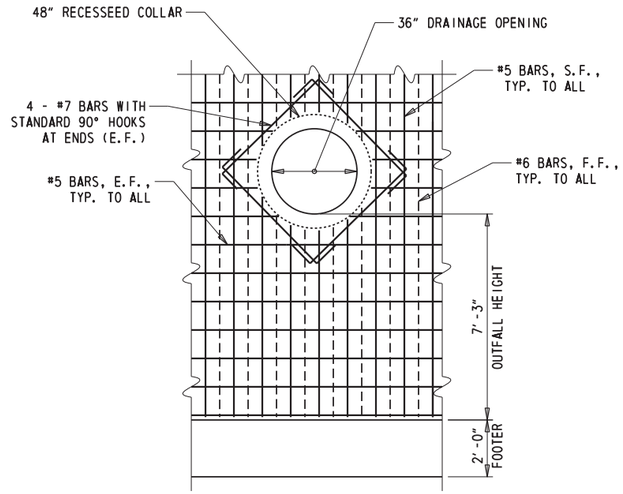

1. ALL VERTICAL AND HORIZONTAL PIPE COLLAR REINFORCEMENT SHALL EXTEND TO 2″ OF PROPOSED DRAINAGE OPENING.
2. REFER TO 'BRIDGE PLAN, SECTION, AND ELEVATION' SHEET FOR ADDITIONAL INFORMATION REGARDING PROPOSED DRAINAGE PIPE LOCATIONS AND ELEVATIONS.
3. PAYMENT OF PIPE COLLAR AND REINFORCEMENT SHALL BE INCIDENTAL TO PRECAST CONCRETE RETAINING WALL (ITEM #612010)

SW WINGWALL PIPE COLLAR REINFORCEMENT DETAIL (STREAM FACE SIDE SHOWN)

⅜″ = 1′-0″

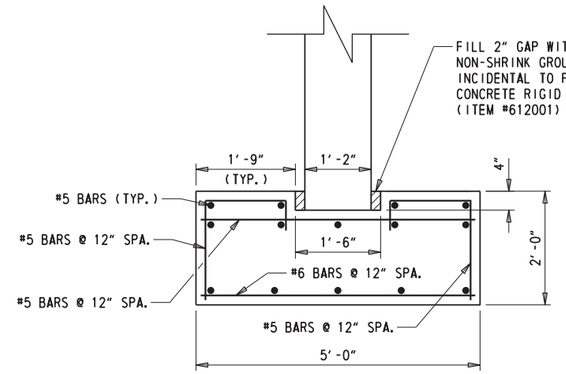

TYPICAL PRECAST FOOTER SECTION

¾″ = 1′-0″

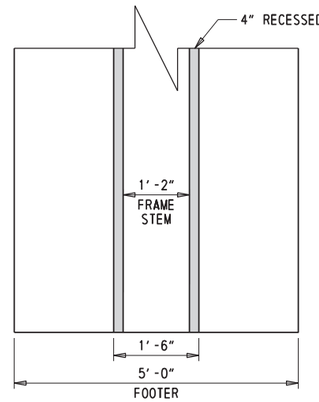

PRECAST FOOTER PLAN

¾″ = 1′-0″

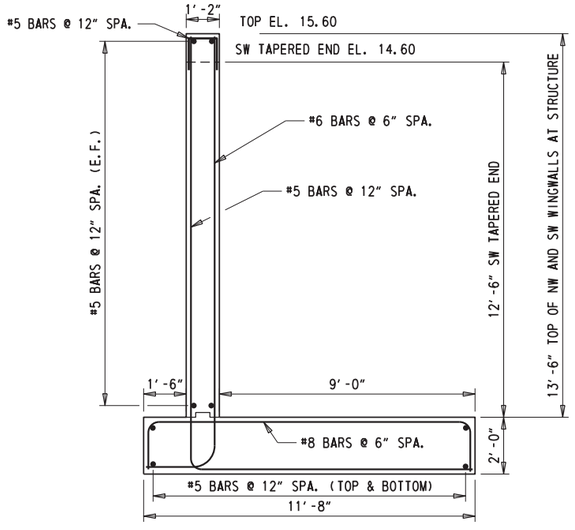

TYPICAL PRECAST WINGWALL SECTION

⅜″ = 1′-0″

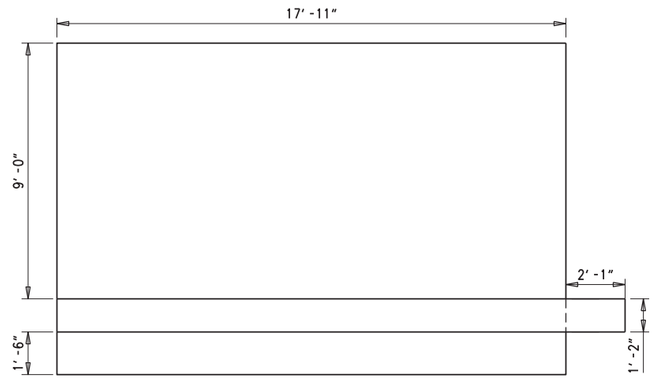

NW PRECAST WINGWALL PLAN

⅜″ = 1′-0″

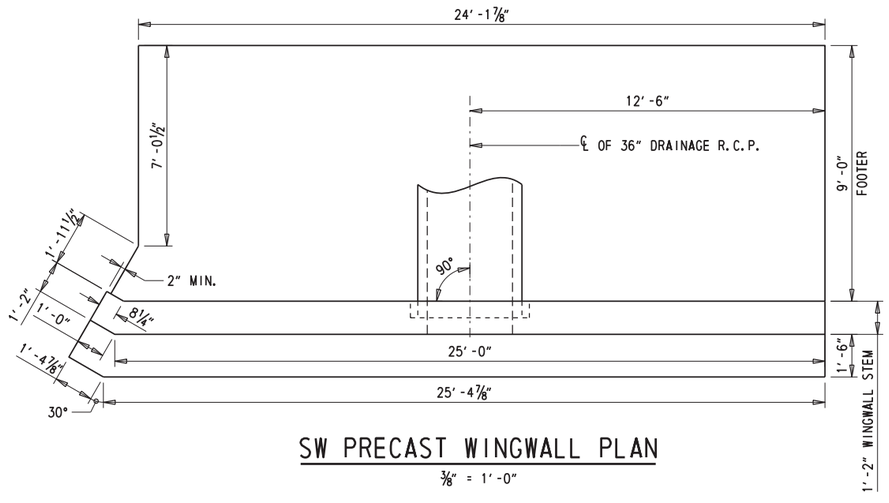

SW PRECAST WINGWALL PLAN

⅜″ = 1′-0″

ADDENDA / REVISIONS	SCALE: AS NOTED	BR 3-507 ON US113 OVER IRON BRANCH	CONTRACT T201307301	BRIDGE NO. 3-507	PRECAST BRIDGE DETAILS	SECTION BR
			COUNTY SUSSEX	DESIGNED BY: JWK		SHEET NO. 11
				CHECKED BY: NED		

18-MAR-2019
15:47
Y:\SUSSEX\113\Bridge\T201307301\Plans\cu02.dgn

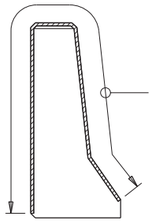

SECTION A-A

REINFORCEMENT NOT SHOWN FOR CLARITY.

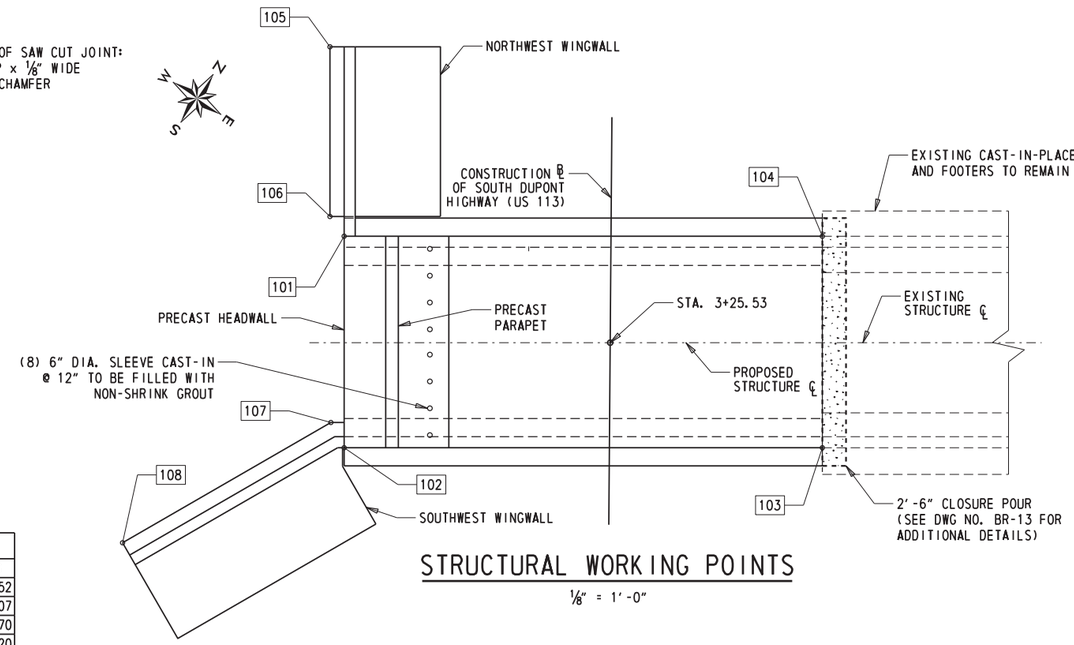

STRUCTURAL WORKING POINTS

⅛" = 1'-0"

STRUCTURAL WORKING POINTS				
PT.	STATION	OFFSET	NORTHING	EASTING
101	3+36.70	-28.109	210407.673	692808.952
102	3+14.36	-28.107	210389.204	692821.507
103	3+14.37	22.393	210417.600	692863.270
104	3+36.70	22.391	210436.070	692850.720
105	3+57.00	-29.539	210423.369	692796.467
106	3+38.78	-29.609	210408.553	692806.540
107	3+17.03	-29.509	210390.620	692818.849
108	3+04.33	-51.507	210367.749	692807.797

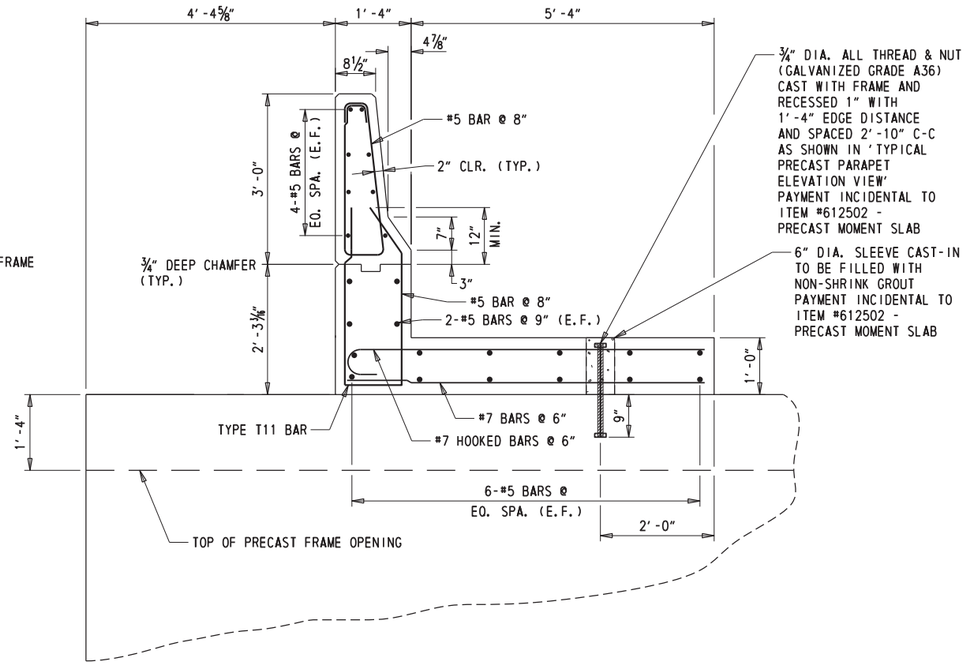

PRECAST PARAPET SECTION

(PRECAST HEADWALL NOT SHOWN FOR CLARITY)

¾" = 1'-0"

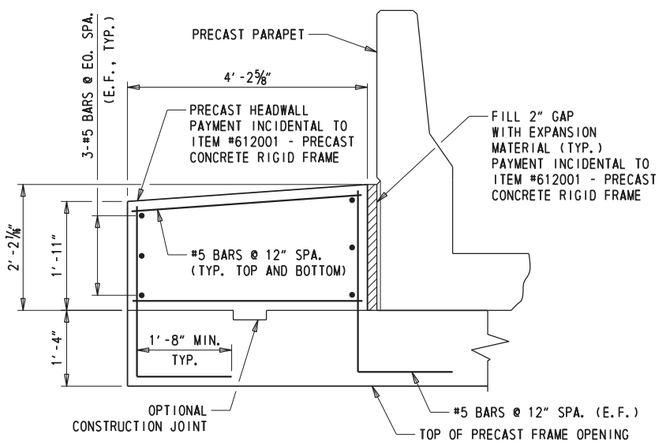

PRECAST HEADWALL SECTION

¾" = 1'-0"

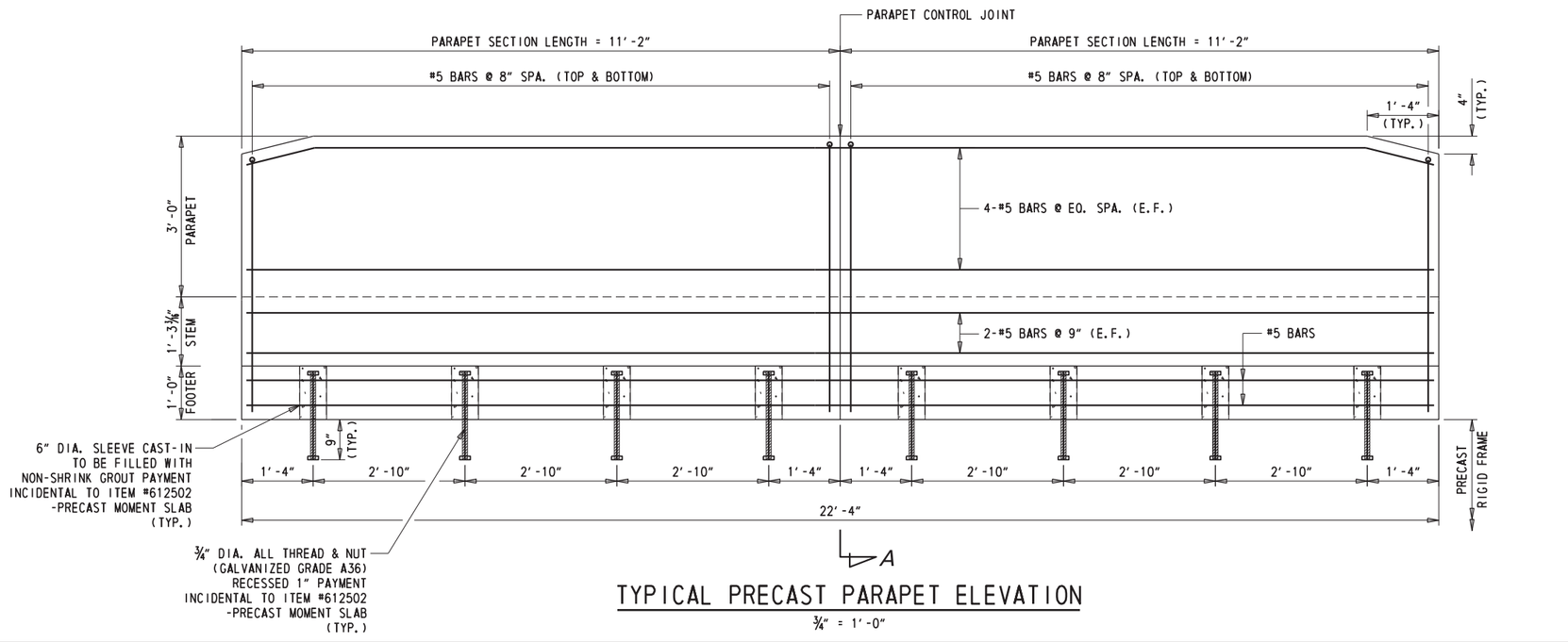

TYPICAL PRECAST PARAPET ELEVATION

¾" = 1'-0"

ADDENDA / REVISIONS		SCALE: AS NOTED	BR 3-507 ON US113 OVER IRON BRANCH	CONTRACT	BRIDGE NO. 3-507	PRECAST CONCRETE DETAILS	SECTION
				T201307301	DESIGNED BY: JWK		BR
				COUNTY			SHEET NO.
				SUSSEX	CHECKED BY: NED		12

19-MAR-2019
12:01
Y:\SUSSEX\113\Bridge\T201307301\Plans\cu01.dgn

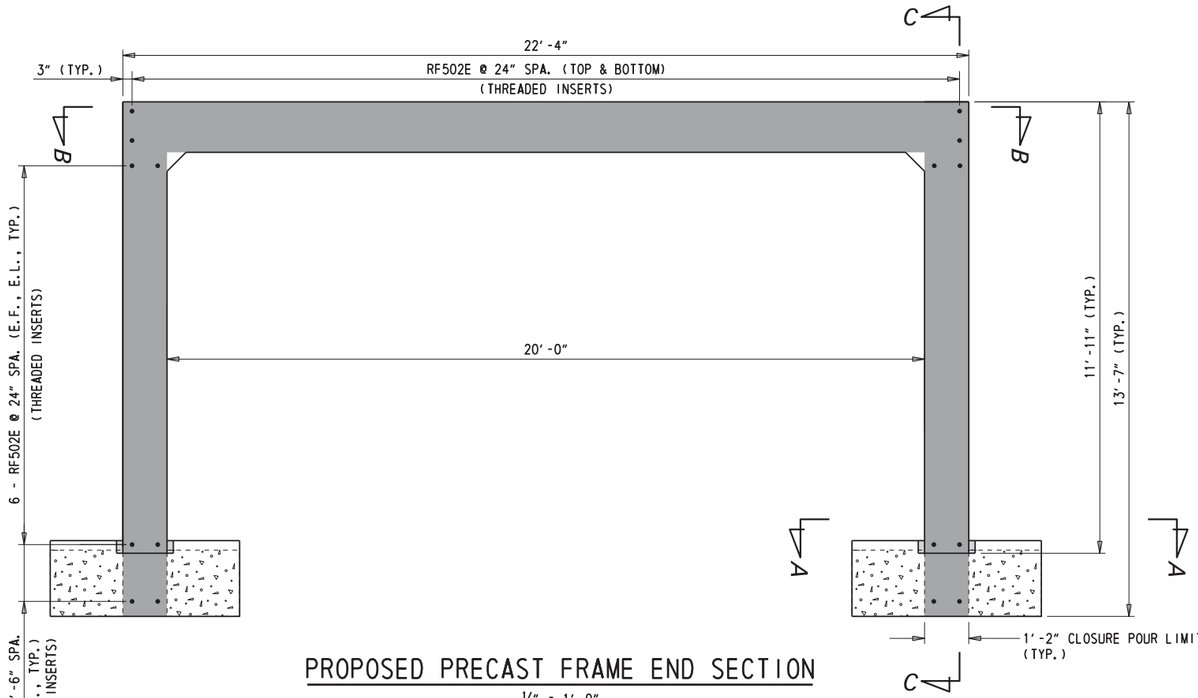

PROPOSED PRECAST FRAME END SECTION

½″ = 1′-0″

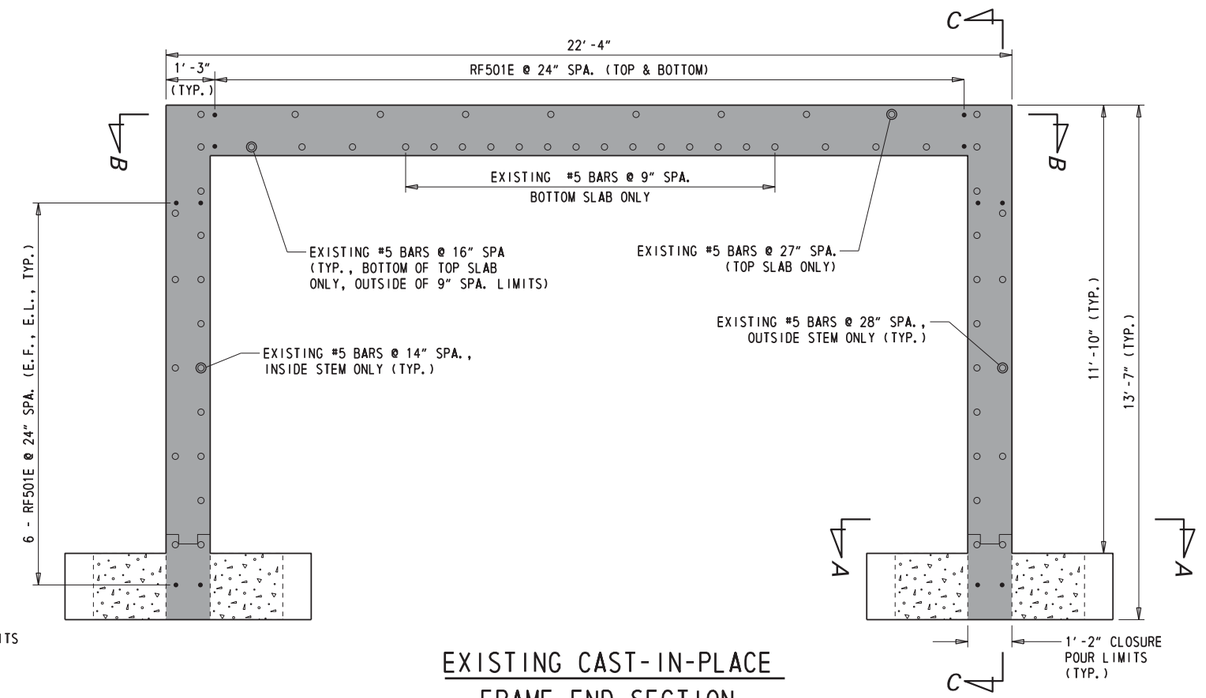

EXISTING CAST-IN-PLACE FRAME END SECTION

½″ = 1′-0″

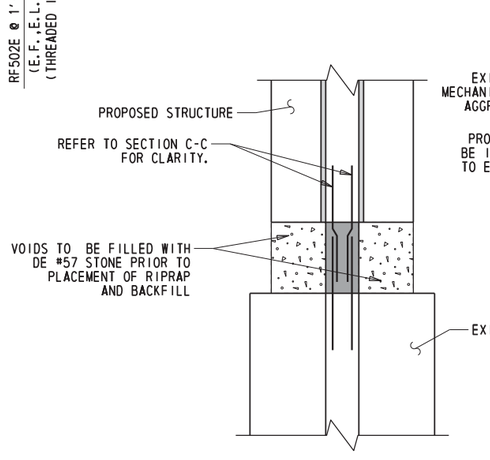

TYPICAL SECTION A-A

⅜″ = 1′-0″

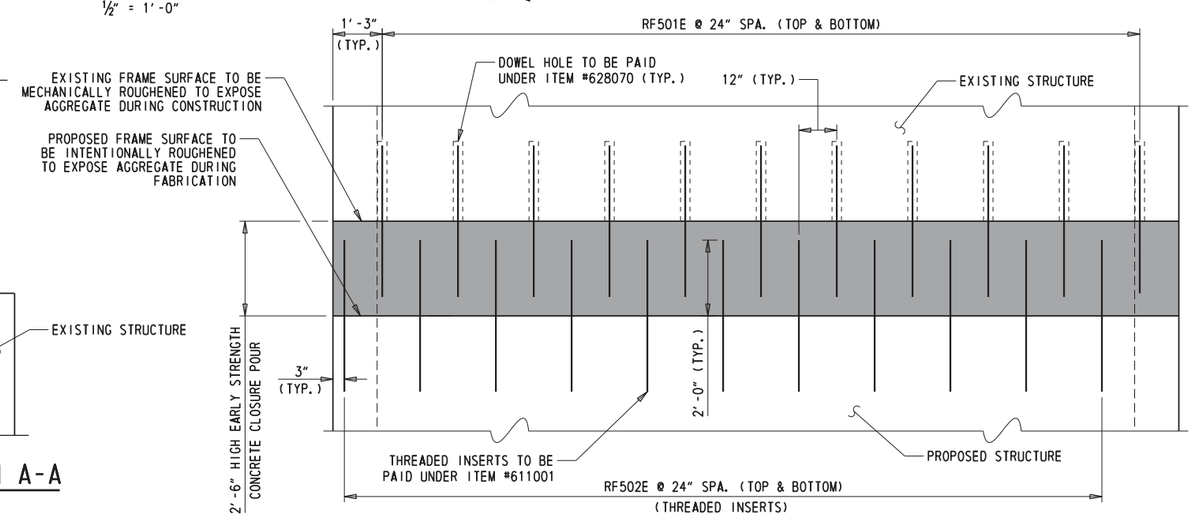

CLOSURE POUR PLAN (B-B)

½″ = 1′-0″

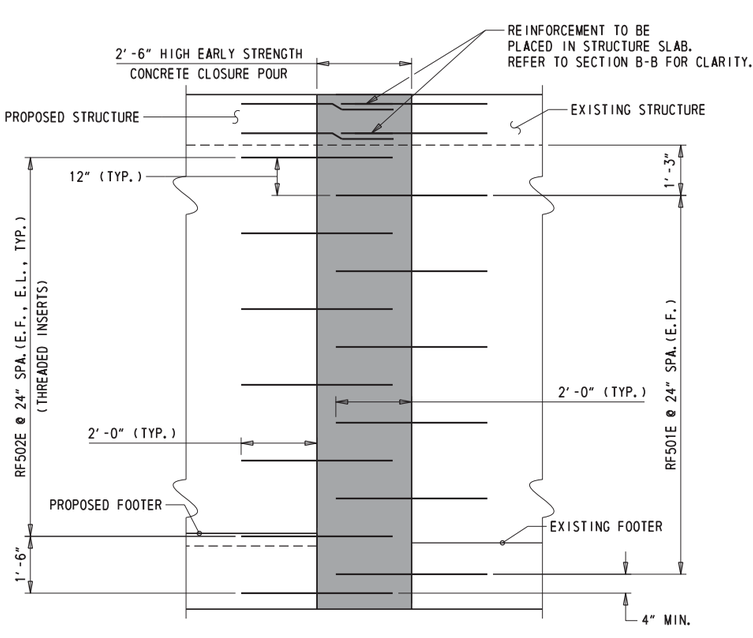

CLOSURE POUR ELEVATION (C-C)

½″ = 1′-0″

REINFORCING BAR LIST				
MARK	SIZE	QTY.	LENGTH	TYPE
RF501E	5	46	4′-0″	STR
RF502E	5	52	4′-0″	STR

LEGEND

E.F. - EACH FACE
E.L. - EACH LEG
F.F. - FILL FACE
N.E. - NORTHEAST
N.W. - NORTHWEST
S.E. - SOUTHEAST
S.F. - STREAM FACE
S.W. - SOUTHWEST
W.W. - WINGWALL

DENOTES CLASS A CONCRETE WITH 2% HIGH EARLY STRENGTH ADMIXTURE

DENOTES #57 STONE

CONCRETE RIGID FRAME NOTES

1. WHEN FIELD DRILLING INTO EXISTING BR 3-507, DO NOT COME INTO CONTACT WITH EXISTING REINFORCEMENT. LOCATE ALL EXISTING REINFORCEMENT THROUGH USE OF PACHOMETER OR SIMILAR PRIOR TO FIELD DRILLING.
2. REFER TO CONTRACT 65-03-004 FOR ADDITIONAL INFORMATION ON EXISTING BR 3-507.
3. ALL FIELD DRILLED BARS FOR BR 3-507 HAVE A SPACING TOLERANCE OF ±2″ TO AVOID CONTACT WITH EXISTING REINFORCEMENT.
4. CONCRETE FOR CLOSURE POUR SHALL BE CLASS A, TYPE I, 4500 PSI WITH A 2% ADMIXTURE OF HIGH EARLY STRENGTH CONCRETE. (PAID FOR UNDER ITEM #610000)
5. TO CREATE AN EXPOSED COARSE AGGREGATE SURFACE, AN IN-FORM RETARDER SHALL BE APPLIED TO THE DOWNSTREAM FACE OF THE PRECAST FRAME SECTION.

ADDENDA / REVISIONS

SCALE: AS NOTED

BR 3-507 ON US113 OVER IRON BRANCH

CONTRACT	BRIDGE NO.	3-507
T201307301	DESIGNED BY: JWK	
COUNTY	CHECKED BY: NED	
SUSSEX		

CLOSURE POUR DETAILS

SECTION
BR
SHEET NO.
13

18-MAR-2019
08:50
Y:\SUSSEX\113\Bridge\T201307301\Plans\cu03.dgn

BORING: IB-1 | **DATE DRILLED:** 2/6/14
STATION: 3+45.82 | **OFFSET:** LT -14.608′ | **ELEVATION:** 16.03 | **NORTHING:** 210422.806 | **EASTING:** 692814.99
COMMENTS: N/A

SAMPLE INFORMATION

NO.	DEPTH	BLOWS /6″	DESCRIPTION	CLASS /G.I.	REMARKS
1	0.0 1.0	13 8	MOIST MEDIUM DENSE BROWN FINE TO COARSE SAND W/SOME SILT, TRACE OF FINE GRAVEL.	A-2-4(0)	
2	1.0 2.0	6 7 4 5	MOIST MEDIUM DENSE BROWN SILTY FINE SAND W/SOME COARSE SAND, TRACE OF FINE GRAVEL.	A-2-4(0)	
3	2.0 4.0	2 2 3 2	MOIST LOOSE BROWN SILTY FINE SAND W/SOME COARSE SAND, TRACE OF FINE GRAVEL.	A-2-4(0)	
4	4.0 6.0	2 2 3 2	WET VERY LOOSE GRAY SILTY FINE SAND W/SOME COARSE SAND, TRACE OF FINE GRAVEL.	A-2-4(0)	
5	6.0 8.0	1 2 1 4	SATURATED VERY LOOSE BLACK FINE TO COARSE SAND W/SOME SILT.	A-2-4(0)	
6	8.0 10.0	3 3 6 8	SATURATED LOOSE GRAY FINE TO COARSE SAND W/SOME FINE GRAVEL, TRACE OF SILT.	A-3	8.6′ TO WATER
7	10.0 12.0	3 6 9	SATURATED MEDIUM DENSE GRAY COARSE TO FINE SAND AND FINE GRAVEL W/TRACE SILT.	A-1-B	
8	12.0 14.0	4 6 9	SATURATED MEDIUM DENSE BROWN FINE GRAVELLY COARSE TO FINE SAND W/TRACE SILT.	A-1-B	
9	14.0 16.0	8 7 8 8	SATURATED MEDIUM DENSE BROWN COARSE TO FINE SAND AND FINE GRAVEL W/TRACE SILT.	A-1-B	15.9′ TO BOTTOM OF FOOTING
10	16.0 18.0	50	SATURATED VERY DENSE BROWN COARSE SANDY FINE GRAVEL W/TRACE FINE SAND AND SILT.	A-1-A	16.9′ TO BOTTOM OF COARSE AGGREGATE FOR FOUNDATION STABILIZATION (#57 STONE)
11	18.0 24.0	42 31 12 11	SATURATED DENSE BROWN COARSE SAND AND FINE GRAVEL W/SOME FINE SAND, TRACE OF SILT.	A-1-B	
12	24.0 29.0	5 5 6 9	SATURATED MEDIUM DENSE BROWN COARSE TO FINE SAND W/SOME FINE GRAVEL, TRACE OF SILT.	A-1-B	
13	29.0 34.0	5 6 10 12	SATURATED MEDIUM DENSE BROWN FINE TO COARSE SAND W/TRACE SILT AND FINE GRAVEL.	A-3	
14	34.0 39.0	9 8 11 11	SATURATED MEDIUM DENSE BROWN COARSE SAND W/SOME FINE SAND AND FINE GRAVEL, TRACE OF SILT.	A-1-B	
15	39.0 44.0	10 16 23 18	SATURATED DENSE GRAY FINE GRAVELLY COARSE TO FINE SAND, TRACE OF SILT.	A-1-B	
16	44.0 49.0	10 11 17 23	SATURATED MEDIUM DENSE GRAY FINE GRAVELLY FINE TO COARSE SAND W/TRACE SILT.	A-1-B	
17	49.0 54.0	16 18 17 28	SATURATED DENSE GREEN FINE TO COARSE SAND W/TRACE FINE GRAVEL AND SILT.	A-3	
18	54.0 59.0	20 32 50	SATURATED VERY DENSE GREEN FINE TO COARSE SAND W/TRACE SILT AND FINE GRAVEL.	A-3	
	59.0 61.0		END BORING		

BORING: IB-2 | **DATE DRILLED:** 2/12/14
STATION: 3+49.50 | **OFFSET:** RT 14.45′ | **ELEVATION:** 16.44 | **NORTHING:** 210442.272 | **EASTING:** 692836.891
COMMENTS: N/A

SAMPLE INFORMATION

NO.	DEPTH	BLOWS /6″	DESCRIPTION	CLASS /G.I.	REMARKS
1	0.0 0.0	2 4 7 9	MOIST MEDIUM DENSE BROWN FINE TO COARSE SAND W/SOME SILT, TRACE OF FINE GRAVEL.	A-2-4(0)	
2	0.0 2.0	7 6 6 8	MOIST MEDIUM DENSE BROWN FINE TO COARSE SAND W/TRACE FINE GRAVEL AND SILT.	A-3	
3	2.0 4.0	7 5 4 2	MOIST LOOSE BROWN FINE TO COARSE SAND W/TRACE FINE GRAVEL AND SILT.	A-3	
4	4.0 6.0	2 7 6 3	WET MEDIUM DENSE BROWN FINE TO COARSE SAND W/TRACE SILT AND FINE GRAVEL.	A-3	
5	6.0 8.0	1 1 1 2	WET VERY LOOSE GRAY FINE TO COARSE SAND W/TRACE FINE GRAVEL AND SILT.	A-3	6.8′ TO WATER
6	8.0 10.0	3 2 1 5	SATURATED VERY LOOSE BLACK FINE SAND W/SOME COARSE SAND, TRACE OF FINE GRAVEL AND SILT.	A-3	
7	10.0 12.0	3 5 5 3	SATURATED LOOSE GRAY FINE TO COARSE SAND W/TRACE FINE GRAVEL AND SILT.	A-3	

BORING: IB-2 CONT.

SAMPLE INFORMATION

NO.	DEPTH	BLOWS /6″	DESCRIPTION	CLASS /G.I.	REMARKS
8	12.0 14.0	5 2 1 2	SATURATED VERY LOOSE GRAY COARSE TO FINE SAND W/SOME FINE GRAVEL, TRACE OF SILT.	A-1-B	
9	14.0 16.0	2 3 4 4	SATURATED LOOSE GRAY COARSE TO FINE SAND W/TRACE FINE GRAVEL AND SILT.	A-1-B	15.9′ TO BOTTOM OF FOOTING
10	16.0 18.0	17 7 5 5	SATURATED MEDIUM DENSE GRAY FINE GRAVELLY COARSE SAND W/SOME FINE SAND, TRACE OF SILT.	A-1-B	16.9′ TO BOTTOM OF COARSE AGGREGATE FOR FOUNDATION STABILIZATION (#57 STONE)
11	18.0 24.0	4 5 9 8	SATURATED MEDIUM DENSE BROWN COARSE TO FINE SANDY FINE GRAVEL W/TRACE SILT.	A-1-B	
12	24.0 29.0	3 5 7 7	SATURATED MEDIUM DENSE BROWN COARSE TO FINE SAND W/TRACE FINE GRAVEL AND SILT.	A-1-B	
13	29.0 34.0	8 8 11 15	SATURATED MEDIUM DENSE BROWN COARSE TO FINE SAND W/TRACE FINE GRAVEL AND SILT.	A-1-B	
14	34.0 39.0	8 14 14 15	SATURATED MEDIUM DENSE BROWN COARSE SAND W/SOME FINE GRAVEL AND FINE SAND, TRACE OF SILT.	A-1-B	
15	39.0 44.0	8 11 13 19	SATURATED MEDIUM DENSE GRAY FINE GRAVELLY COARSE SAND W/SOME FINE SAND, TRACE OF SILT.	A-1-B	
16	44.0 49.0	12 16 29 28	SATURATED DENSE GRAY FINE TO COARSE SAND W/SOME FINE GRAVEL, TRACE OF SILT.	A-3	
17	49.0 54.0	13 15 17 17	SATURATED DENSE GRAY FINE TO COARSE SAND W/TRACE FINE GRAVEL AND SILT.	A-3	
18	54.0 59.0	15 23 21 25	SATURATED DENSE GRAY FINE TO COARSE SAND W/SOME FINE GRAVEL, TRACE OF SILT.	A-3	
	59.0 61.0		END BORING		

BORING: IB-4 | **DATE DRILLED:** 2/6/14
STATION: 3+03.64 | **OFFSET:** LT -17.29′ | **ELEVATION:** 16.07 | **NORTHING:** 210386.416 | **EASTING:** 692836.483
COMMENTS: N/A

SAMPLE INFORMATION

NO.	DEPTH	BLOWS /6″	DESCRIPTION	CLASS /G.I.	REMARKS
	0.0				
1	1.0	7 8	MOIST MEDIUM DENSE BROWN FINE TO COARSE SAND W/SOME SILT, TRACE OF FINE GRAVEL.	A-2-4(0)	
2	1.0 2.0	5 5 5 4	MOIST LOOSE BROWN FINE SAND W/SOME COARSE SAND AND SILT, TRACE OF FINE GRAVEL.	A-2-4(0)	
3	2.0 4.0	3 4 7 3	MOIST MEDIUM DENSE BROWN FINE TO COARSE SAND W/SOME FINE GRAVEL AND SILT.	A-2-4(0)	
4	4.0 6.0	3 2 1 1	MOIST VERY LOOSE GRAY SILTY FINE SAND W/SOME COARSE SAND, TRACE OF FINE GRAVEL.	A-2-4(0)	
5	6.0 8.0	1 1 1 1	WET VERY LOOSE BLACK FINE SAND W/SOME SILT AND COARSE SAND, TRACE OF FINE GRAVEL.	A-2-4(0)	
6	8.0 10.0	2 2 3 5	WET LOOSE BROWN FINE TO COARSE SAND W/TRACE FINE GRAVEL AND SILT.	A-3	8.3′ TO WATER
7	10.0 12.0	8 5 7 6	WET MEDIUM DENSE BROWN FINE GRAVELLY FINE TO COARSE SAND W/TRACE SILT.	A-1-B	
8	12.0 14.0	WR 2 4 7	WET LOOSE BROWN COARSE TO FINE SAND W/TRACE FINE GRAVEL AND SILT.	A-1-B	
9	14.0 16.0	5 6 7 8	WET MEDIUM DENSE BROWN COARSE TO FINE SAND W/SOME FINE GRAVEL, TRACE OF SILT.	A-1-B	15.9′ TO BOTTOM OF FOOTING
10	16.0 18.0	8 9 9 8	WET MEDIUM DENSE BROWN COARSE SAND AND FINE GRAVEL W/SOME FINE SAND AND SILT.	A-1-B	16.9′ TO BOTTOM OF COARSE AGGREGATE FOR FOUNDATION STABILIZATION (#57 STONE)
11	18.0 24.0	5 5 5 8	WET LOOSE BROWN FINE TO COARSE SAND W/SOME SILT, TRACE OF FINE GRAVEL.	A-2-4(0)	
12	24.0 29.0	5 8 7 8	WET MEDIUM DENSE BROWN COARSE TO FINE SAND W/SOME FINE GRAVEL, TRACE OF SILT.	A-1-B	
13	29.0 34.0	5 7 9 10	WET MEDIUM DENSE BROWN COARSE TO FINE SAND W/SOME SILT, TRACE OF FINE GRAVEL.	A-1-B	

BORING: IB-4 CONT.

SAMPLE INFORMATION

NO.	DEPTH	BLOWS /6″	DESCRIPTION	CLASS /G.I.	REMARKS
14	34.0 39.0	5 9 19 35	WET MEDIUM DENSE GRAY COARSE TO FINE SAND W/SOME FINE GRAVEL, TRACE OF SILT.	A-1-B	
15	39.0 44.0	10 21 20 17	WET DENSE GRAY FINE GRAVEL AND COARSE SAND W/SOME FINE SAND, TRACE OF SILT.	A-1-B	
16	44.0 49.0	23 30 27 30	WET VERY DENSE GRAY FINE TO COARSE SAND W/TRACE FINE GRAVEL AND SILT.	A-3	
17	49.0 54.0	22 16 20 21	WET DENSE GREEN FINE TO COARSE SAND W/TRACE SILT AND FINE GRAVEL.	A-3	
18	54.0 59.0	12 14 18 19	WET DENSE GREEN FINE SAND W/SOME COARSE SAND, TRACE OF FINE GRAVEL AND SILT.	A-3	
	59.0 61.0		END BORING		

BORING: IB-5 | **DATE DRILLED:** 2/10/14
STATION: 2+99.50 | **OFFSET:** RT 23.07′ | **ELEVATION:** 15.68 | **NORTHING:** 210405.688 | **EASTING:** 692872.192
COMMENTS: N/A

SAMPLE INFORMATION

NO.	DEPTH	BLOWS /6″	DESCRIPTION	CLASS /G.I.	REMARKS
1	0.0 0.0	3 6 9 6	MOIST MEDIUM DENSE BROWN FINE TO COARSE SAND W/SOME SILT, TRACE OF FINE GRAVEL.	A-2-4(0)	
2	0.0 2.0	6 5 4 3	MOIST LOOSE BROWN FINE TO COARSE SAND W/TRACE FINE GRAVEL AND SILT.	A-3	
3	2.0 4.0	5 3 6 7	WET LOOSE BROWN FINE TO COARSE SAND W/SOME SILT, TRACE OF FINE GRAVEL.	A-2-4(0)	
4	4.0 6.0	5 3 3 3	WET LOOSE BROWN FINE TO COARSE SAND W/SOME SILT, TRACE OF FINE GRAVEL.	A-2-4(0)	
5	6.0 8.0	3 1 1 1	SATURATED VERY LOOSE BROWN SILTY FINE SAND W/TRACE COARSE SAND.	A-2-4(0)	6.6′ TO WATER
6	8.0 10.0	1 1 1 1	SATURATED VERY LOOSE BROWN FINE SAND W/SOME SILT AND COARSE SAND.	A-2-4(0)	
7	10.0 12.0	3 2 1 2	SATURATED VERY LOOSE BROWN FINE TO COARSE SAND W/SOME FINE GRAVEL, TRACE OF SILT.	A-3	
8	12.0 14.0	2 4 4 6	SATURATED LOOSE BROWN FINE TO COARSE SAND W/SOME FINE GRAVEL, TRACE OF SILT.	A-1-B	
9	14.0 16.0	2 3 6 7	SATURATED LOOSE BROWN COARSE TO FINE SAND W/SOME FINE GRAVEL, TRACE OF SILT.	A-1-B	15.9′ TO BOTTOM OF FOOTING
10	16.0 18.0	1 3 5 6	SATURATED LOOSE BROWN FINE TO COARSE SAND W/TRACE FINE GRAVEL AND SILT.	A-3	16.9′ TO BOTTOM OF COARSE AGGREGATE FOR FOUNDATION STABILIZATION (#57 STONE)
11	18.0 24.0	3 6 6	SATURATED MEDIUM DENSE BROWN COARSE TO FINE SAND W/TRACE FINE GRAVEL AND SILT.	A-1-B	
12	24.0 29.0	5 6 6 5	SATURATED MEDIUM DENSE BROWN COARSE TO FINE SAND W/SOME FINE GRAVEL, TRACE OF SILT.	A-1-B	
13	29.0 34.0	5 7 12 13	SATURATED MEDIUM DENSE BROWN COARSE TO FINE SAND W/SOME FINE GRAVEL, TRACE OF SILT.	A-1-B	
14	34.0 39.0	11 11 15 19	SATURATED MEDIUM DENSE BROWN FINE GRAVELLY COARSE TO FINE SAND W/TRACE SILT.	A-1-B	
15	39.0 44.0	11 11 15 17	SATURATED MEDIUM DENSE BROWN FINE GRAVELLY FINE TO COARSE SAND W/TRACE SILT.	A-1-B	
16	44.0 49.0	17 19 24 31	SATURATED DENSE GRAY COARSE SAND W/SOME FINE SAND AND SILT, TRACE OF FINE GRAVEL.	A-1-B	
17	49.0 54.0	18 19 21 23	SATURATED DENSE GRAY FINE TO COARSE SAND W/TRACE SILT AND FINE GRAVEL.	A-3	
18	54.0 59.0	22 24 25 30	SATURATED DENSE GRAY COARSE TO FINE SAND W/TRACE FINE GRAVEL AND SILT.	A-1-B	
	59.0 61.0		END BORING		

NOTE: THE BORING DATA PROVIDED ON THE PROFILE SHEETS INDICATES THE SOIL CONDITION ONLY AT THE SPECIFIC LOCATION EACH BORING WAS PERFORMED AND ONLY TO THE DEPTH PENETRATED.

ADDENDA / REVISIONS

BR 3–507 ON US113 OVER IRON BRANCH

CONTRACT	BRIDGE NO.	3–507	SOIL BORING LOG	SECTION
T201307301	DESIGNED BY: JWK			BR
COUNTY				SHEET NO.
SUSSEX	CHECKED BY: NED			14

18-MAR-2019
18:53
Y:\SUSSEX\113\Bridge\T201307301\Plans\bo01.dgn

ENVIRONMENTAL COMPLIANCE NOTES

1. GENERAL NOTES:

   A. THE PURPOSE OF THIS SHEET IS TO IDENTIFY THOSE ITEMS ASSOCIATED WITH ENVIRONMENTAL COMPLIANCE. IMPACT CALCULATIONS ARE FOR THE AGENCY PERMIT REPORTING PURPOSES ONLY AND ARE NOT TO BE USED FOR BIDDING PURPOSES.

   B. IF A DEPARTURE FROM THE APPROVED PLANS (WHICH WOULD AFFECT ANY NATURAL AND/OR CULTURAL RESOURCES) IS NECESSARY, THE ENVIRONMENTAL STUDIES SECTION SHALL BE CONTACTED AT (302) 760-2264 TO ALLOW FOR COORDINATION WITH THE APPROPRIATE RESOURCE AGENCIES AND APPROVAL.

   C. USE OF THIS SHEET DOES NOT ALLEVIATE THE CONTRACTOR'S RESPONSIBILITY TO COMPLY WITH ALL CONDITIONS SET FORTH IN THE ENVIRONMENTAL STATEMENT AND PERMITS.

2. NATURAL RESOURCE ISSUES:

   A. PERMIT REQUIREMENTS/APPROVALS*:
   U.S. ARMY CORPS OF ENGINEERS (COE): #3(a) AND (c) (NO PCN)
   DNREC - WETLANDS: PROJECT CONSISTENT WITH DEL. CODE CH. 72, SECTION 7217, SPECIAL EXEMPTION (b)
   DNREC - WATER QUALITY & COASTAL ZONE - ISSUED

   * THE PERMITS/APPROVALS LISTED ARE THOSE REQUIRED FOR THIS PROJECT. THE ENVIRONMENTAL STUDIES SECTION IS RESPONSIBLE FOR COORDINATING AND/OR OBTAINING THIS APPROVAL.

   ** THE CONTRACTOR MUST ENSURE THAT THESE PERMITS/APPROVALS ARE IN THEIR POSSESSION PRIOR TO BEGINNING CONSTRUCTION IN THE PERMITTED AREA(S) AND ENSURE THEY ARE DISPLAYED ON-SITE DURING THE ENTIRE CONSTRUCTION PERIOD.

   B. CONSTRUCTION RESTRICTIONS:
   FISHERIES - MARCH 1ST TO JUNE 30TH (NO IN-WATER WORK MARCH 1ST TO JUNE 30TH)
   ENDANGERED SPECIES - NONE
   MIGRATORY BIRDS - NONE

3. CULTURAL RESOURCE ISSUES:
   A. AS A RESULT OF THE CURRENT PROJECT COORDINATION, THIS PROJECT IS CONSISTENT WITH STIPULATION II.B.2 OF DELDOT'S PROGRAMMATIC AGREEMENT WITH DE STATE HISTORIC PRESERVATION OFFICE (DE SHPO), FEDERAL HIGHWAY ADMINISTRATION (FHWA) AND ADVISORY COUNCIL ON HISTORIC PRESERVATION (ACHP). THERE ARE NO CULTURAL RESOURCE CONCERNS AS LONG AS THE PROJECT SCOPE IS NOT MODIFIED AND ALL STAGING AND STOCKPILING REMAINS WITHIN THE EXISTING FOOTPRINT. SHOULD IT BE NECESSARY TO ADD ADDITIONAL ACCESS LOCATIONS OR OTHER STOCKPILING/STAGING AREAS, DELDOT ENVIRONMENTAL STUDIES STAFF WILL NEED TO REVIEW THESE AREAS FOR POTENTIAL CULTURAL RESOURCES CONCERNS.

4. STREAM RESTORATION AND SLOPE RIPRAP TREATMENT

   A. THE CONTRACTOR SHALL FOLLOW THE SPECIAL PROVISIONS OF ITEM #707500 CHANNEL BED FILL IN REGARDS TO THE SALVAGING OF ON-SITE NATURAL STREAM BOTTOM MATERIAL OR THE FURNISHING OF OFF-SITE MATERIAL. IF SUFFICIENT SOURCES FOR CHANNEL BED FILL DO NOT EXIST ON-SITE, ANY NEW MATERIAL SHALL CONFORM TO THE REQUIREMENTS OF ITEM #707500 CHANNEL BED FILL. ALL RIPRAP IN THE CHANNEL BOTTOM (I.E. BELOW THE WATER LINE) SHALL BE RECESSED ONE FOOT BELOW STREAM BED ELEVATION AND CHOKED WITH BORROW TYPE 'B' SO THAT ALL OF THE VOIDS IN THE RIPRAP ARE FILLED WITH MATERIAL. PAYMENT UNDER ITEM #209002 BORROW TYPE 'B'. THE RIPRAP SHALL THEN BE COVERED WITH A MINIMUM OF 12" CHANNEL BED FILL. FINAL CHANNEL ELEVATIONS SHALL MATCH EXISTING ELEVATIONS AT THE UPSTREAM AND DOWNSTREAM PROJECT LIMITS. THROUGH THE STRUCTURE, ELEVATIONS SHALL BE AS NOTED ON THE PLANS. PAYMENT UNDER ITEM #707500 CHANNEL BED FILL.

   B. OTHER AREAS OF THE CHANNEL BOTTOM AFFECTED BY CONSTRUCTION (INCLUDING, BUT NOT LIMITED TO, THE LOCATION OF SUMP PITS, STABILIZED OUTFALLS, TEMPORARY PIPES AND/OR SANDBAG DIKES AND DIVERSIONS) SHALL BE RESTORED TO EXISTING CONDITIONS. ANY CAVITIES OR SCOUR HOLES RESULTING FROM CONSTRUCTION ACTIVITIES SHALL BE FILLED WITH CHANNEL BED FILL. PAYMENT UNDER ITEM #707500 CHANNEL BED FILL.

   C. WHEN ALL EROSION AND SEDIMENT CONTROL MEASURES ARE REMOVED AND THE STREAM RETURNS TO ITS NATURAL FLOW CONDITIONS, THE FLOW MUST REMAIN ABOVE GROUND AND ABOVE THE RIPRAP (I.E. THE FLOW CANNOT BE 'LOST' IN THE RIPRAP OR BENEATH THE STRUCTURE). IF THIS IS NOT ACHIEVED, THE CONTRACTOR WILL BE REQUIRED TO TAKE CORRECTIVE ACTION AT THE CONTRACTOR'S EXPENSE.

   D. ALL RIPRAP ON THE STREAM BANK, OUTSIDE THE CHANNEL BED, SHALL BE CHOKED WITH DELAWARE #57 STONE, FILLED WITH TOPSOIL, AND SEEDED. PLACE JUST ENOUGH CHOKE MATERIAL TO PREVENT THE LOSS OF TOPSOIL THROUGH THE RIPRAP, AND THEN FINISH FILLING THE VOIDS WITH TOPSOIL SO THAT THE RIPRAP PEAKS ARE BARELY VISIBLE. AN ADDITIONAL 6-INCH TOPSOIL LAYER SHALL BE PLACED ON TOP OF THE RIPRAP. SLOPE SEEDING SHALL BE WITH ITEM #908019 STREAMBANK SEED MIX, SEEDING. FOLLOWING THE SEEDING OPERATION, ITEM #908020 EROSION CONTROL BLANKET MULCH, OR OTHER BLANKET AS SHOWN ON THE PLANS SHALL BE INSTALLED. EROSION CONTROL BLANKET AT TOE OF SLOPE CAN BE TRENCHED IN OR STAPLES PLACED AT 6" ON CENTER. ALL WORK, STARTING WITH THE INITIAL CHOKING WITH TOPSOIL THROUGH THE SEEDING SHALL BE COMPLETED PRIOR TO ANY RAIN EVENT. DELAWARE #57 STONE SHALL BE INCIDENTAL TO THE RIPRAP ITEM. ALL OTHER ITEMS SHALL BE PAID FOR UNDER THEIR RESPECTIVE ITEMS.

   E. THE TOPSOIL/SEED/MULCH CAN BE PLACED BEFORE OR AFTER THE REMOVAL OF THE STREAM DIVERSION. IF IT OCCURS AFTER STREAM DIVERSION REMOVAL, A TURBIDITY CURTAIN SHALL BE USED TO MINIMIZE IN-STREAM SEDIMENTATION. PAYMENT SHALL BE INCIDENTAL TO ITEM #909005 STREAM DIVERSION.

5. CLEARING IN WETLAND AREAS SHALL BE KEPT TO A MINIMUM ABSOLUTELY NECESSARY FOR CONSTRUCTION ACCESS. IN WETLAND AREAS THAT ARE CLEARED, THERE SHALL BE NO GRUBBING EXCEPT WHERE NECESSARY TO CONSTRUCT PROJECT COMPONENTS SUCH AS FOUNDATIONS AND RIPRAP PROTECTION. VEGETATION SHALL BE CUT FLUSH WITH THE GROUND (I.E. NO DISTURBANCE OF THE ROOT MAT. TEMPORARILY DISTURBED WETLAND AREAS SHALL BE RESTORED TO GRADE AND SEEDED WITH TEMPORARY GRASS SEEDING - DRY GROUND, (PAYMENT UNDER ITEM #908017). SILT FENCE AND/OR CONSTRUCTION SAFETY FENCE SHALL BE USED ALONG THE LIMITS OF CONSTRUCTION IN ALL AREAS WHERE WATER/WETLANDS EXIST (AS SHOWN ON THE EC SHEETS). CONTRACTOR ACCESS BEYOND THE LOC IS STRICTLY PROHIBITED.

6. SILT FENCE INSTALLATION ADJACENT TO WOODED UPLANDS AND/OR WOODED WETLANDS: PROVIDED PROPER EROSION & SEDIMENT CONTROL CAN BE MAINTAINED, SANDBAGS SHALL BE USED TO SECURE SILT FENCE IN LIEU OF TRENCHING. THE ENVIRONMENTAL STUDIES SECTION (CAROL SULLIVAN, 302-760-2129) CAN PROVIDE FURTHER GUIDANCE REGARDING THIS METHOD OF INSTALLATION.

7. NO BALD CYPRESS SHOULD BE REMOVED AS A RESULT OF THIS PROJECT AND EFFORTS TO MINIMIZE SEDIMENTATION ARE NECESSRY TO ENSURE THIS HABITAT OF CONSERVATION CONCERN IS NOT IMPACTED.

WETLAND AREA DELINEATED BY TOLAND VAN STAN JR., CHIEF OF SURVEYS FOR RAMESH C. BATTA ASSOCIATES IN OCTOBER 2014 IN ACCORDANCE WITH THE US ARMY CORPS OF ENGINEERS "CORPS OF ENGINEERS WETLAND DELINEATION MANUAL (1987) AND THE ATLANTIC AND GULF COAST REGIONAL SUPPLEMENT (2010)." ORIGINAL SHEET PREPARED BY JONATHAN KARAM ON 01-12-2015. SHEET LAST UPDATED ON 01-10-2019.

ADDENDA / REVISIONS		NOT TO SCALE	BR 3-507 ON US113 OVER IRON BRANCH	CONTRACT T201307301	BRIDGE NO. 3-507	ENVIRONMENTAL NOTES	SECTION BR
				COUNTY SUSSEX	DESIGNED BY: JWK		SHEET NO. 15
					CHECKED BY: NED		

18-MAR-2019
15:20
Y:\SUSSEX\113\Bridge\T201307301\Plans\pn.dgn

LEGEND

- PERMANENT IMPACT AREA
- TEMPORARY IMPACT AREA
- OHW — ORDINARY HIGH WATER
- WL — WETLAND BOUNDARY
- OHW/WL — ORD. HIGH WATER / WETLAND
- XX / ?X — IMPACT AREA TYPE ID. (SEE BELOW) / IMPACT AREA ID. AND/OR NUMBER
- O = OPEN WATER IMPACT W = WETLAND IMPACT
- T = TEMPORARY IMPACT C = CREATION AREA

WETLAND IMPACT AREA SCHEDULE

ID	IMPACT DESCRIPTION	AREA (SF)	AREA (AC)	VOLUME (CY)	JURISDICTION
WT-1	UPSTREAM SANDBAGS	173.18	0.0040	N/A	COE
WT-2	UPSTREAM SUMP PIT	28.27	0.00065	N/A	COE
WT-3	UPSTREAM RIPRAP	670.33	0.015	N/A	COE
WT-4	DOWNSTREAM SANDBAGS	73.13	0.0016	N/A	COE
TOTAL TEMPORARY WETLAND IMPACTS		944.91	0.02125	N/A	COE
W-1	UPSTREAM WINGWALLS	85.69	0.002	N/A	COE
TOTAL PERMANENT WETLAND IMPACTS		85.69	0.002	N/A	COE

TEMPORARY OPEN WATER IMPACT AREA SCHEDULE

ID	IMPACT DESCRIPTION	AREA (SF)	AREA (AC)	VOLUME (CY)	JURISDICTION
OT-1	STILLING WELL	120.00	0.00275	17.78	COE/DNREC
OT-2	UPSTREAM SANDBAGS	129.73	0.00297	28.83	COE/DNREC
OT-3	RIPRAP/CHANNEL BED FILL	2237.91	0.0513	248.66	COE/DNREC
OT-4	TEMPORARY DIVERSION PIPE	517.49	0.0118	57.50	COE/DNREC
OT-5	DOWNSTREAM SANDBAGS	122.52	0.00281	27.23	COE/DNREC
OT-6	DOWNSTREAM SUMP PIT	28.27	0.00065	5.23	COE/DNREC
OT-7	STABILIZED DISCHARGE	25.00	0.00057	1.39	COE/DNREC
TOT. TEMPORARY OPEN WATER IMPACTS		3180.92	0.073	386.62	COE/DNREC

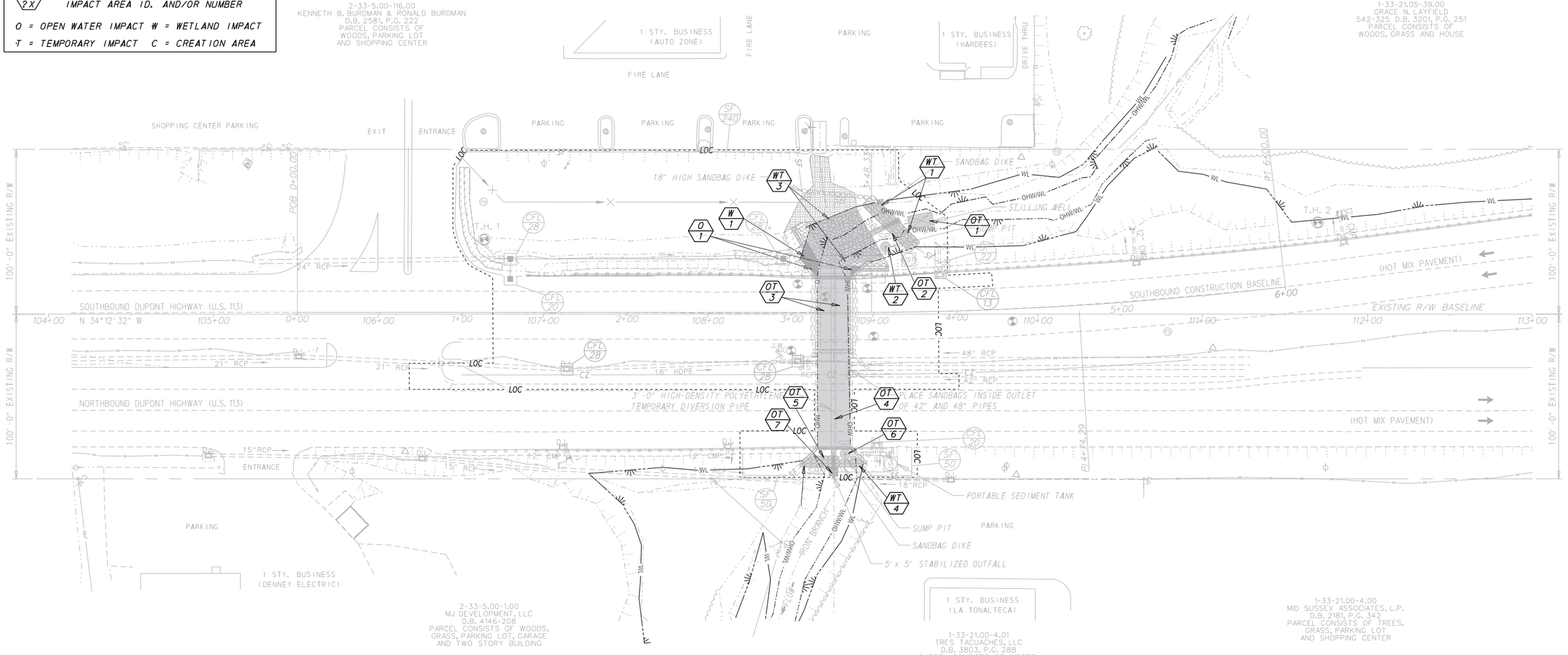

PERMANENT OPEN WATER IMPACT AREA SCHEDULE

ID	IMPACT DESCRIPTION	AREA (SF)	AREA (AC)	VOLUME (CY)	JURISDICTION
O-1	FRAME/WINGWALL FOOTERS	60.96	0.0014	11.29	COE/DNREC
TOTAL PERMANENT OPEN WATER IMPACTS		60.96	0.0014	11.29	COE/DNREC

WETLAND AREA DELINEATED BY TOLAND VAN STAN JR., CHIEF OF SURVEYS FOR RAMESH C. BATTA ASSOCIATES IN OCTOBER 2014 IN ACCORDANCE WITH THE US ARMY CORPS OF ENGINEERS "CORPS OF ENGINEERS WETLAND DELINEATION MANUAL (1987) AND THE ATLANTIC AND GULF COAST REGIONAL SUPPLEMENT (2010)."

SHEET PREPARED BY JONATHAN KARAM, 8-01-2017, DELAWARE D.O.T. BRIDGE DESIGN SECTION.
SHEET LAST UPDATED ON 01-30-2019.

ADDENDA / REVISIONS		SCALE	BR 3-507 ON US113 OVER IRON BRANCH	CONTRACT	BRIDGE NO. 3-507	ENVIRONMENTAL COMPLIANCE PLAN	SECTION
		0 30 60 90 FEET		T201307301	DESIGNED BY: JWK		BR
				COUNTY SUSSEX	CHECKED BY: NED		SHEET NO. 16

18-MAR-2019
Y:\SUSSEX\113\Bridge\T201307301\Plans\cp.dgn

CONSTRUCTION SEQUENCE (PHASE 1 - M.O.T. PLAN AND REPAIR OF DETOUR)

1. PRIOR TO START OF CONSTRUCTION, MILL AND OVERLAY THE PORTION OF RADISH ROAD LOCATED WITHIN THE VEHICULAR DETOUR PLAN BETWEEN HICKORY HILL ROAD AND U.S.113 UTILIZING TA-10 IN THE DELAWARE MUTCD (FIGURE 6H-10) TO MAINTAIN TRAFFIC. MATCH EXISTING STRIPING AND REPAIR ANY ROADSIDE ITEMS THAT MAY HAVE BEEN DISTURBED DURING MILL AND OVERLAY.

2. INSTALL M.O.T. DEVICES PER M.O.T. PLAN (DWG NO. TS-20 TO TS-23)

MAINTENANCE OF TRAFFIC NOTES

1. THIS PROJECT IS CONSIDERED A SIGNIFICANT PROJECT AS DEFINED BY DELDOT'S WORK ZONE MOBILITY PROCEDURES AND GUIDELINES. A TYPE B TRANSPORTATION MANAGEMENT PLAN (TMP) HAS BEEN PREPARED AND IS AVAILABLE FOR VIEWING BY CONTACTING THE DEPARTMENT'S SAFETY PROGRAMS MANAGER AT (302)-659-4060. ALL MONITORING REQUIREMENTS OF THE TMP SHALL BE CONDUCTED BY DELDOT FORCES UNLESS OTHERWISE DIRECTED BY THE ENGINEER. MODIFICATIONS TO THE TMP SHALL BE COMPLETED BY THE CONTRACTOR IF CHANGES TO THE TIME RESTRICTIONS OR THE TRAFFIC CONTROL PLAN ARE DESIRED. THE MODIFIED TMP SHALL BE PREPARED BY A PROFESSIONAL ENGINEER REGISTERED IN THE STATE OF DELAWARE.

2. WITHIN THE MAINLINE WORK AREA, PERMANENT ADVANCE WARNING SIGNS WITH THE LEGENDS "ROAD WORK 1500 FT", "ROAD WORK 1000 FT" AND "ROAD WORK 500 FT" SHALL BE INSTALLED IN ADVANCE OF THE WORK AREA IN BOTH DIRECTIONS. AN "END ROAD WORK" SIGN SHALL BE LOCATED 500 FEET DOWNSTREAM FROM THE WORK AREA. ON INTERSECTING ROADWAYS WITHIN THE PROJECT LIMITS, A "ROAD WORK AHEAD" SIGN SHALL BE PLACED AT A DISTANCE NOT LESS THAN 500 FEET IN ADVANCE OF THE WORK AREA AND AN "END ROAD WORK" SIGN SHALL BE LOCATED 500 FEET DOWNSTREAM OF THE WORK AREA. THE USE OF SKID MOUNTED SIGN SUPPORTS IS NOT ALLOWED UNLESS THE CONTRACTOR CAN DEMONSTRATE THAT A UTILITY CONFLICT EXISTS, WHICH SHALL BE VERIFIED BY THE ENGINEER; OR CONCRETE MEDIANS PREVENT THE INSTALLATION OF THE PERMANENT SIGNS IN THE APPROPRIATE LOCATION.

MAINTENANCE OF TRAFFIC NOTES CONT.

3. ALL MAINTENANCE OF TRAFFIC ACTIVITIES FOR PHASES 2 AND 4 WILL BE PAID FOR UNDER ITEM *801000 - MAINTENANCE OF TRAFFIC AND THEIR RESPECTIVE ITEMS IN ACCORDANCE WITH TA-3A AND TA-33.

4. ALL MAINTENANCE OF TRAFFIC ACTIVITIES FOR PHASE 3 WILL BE IN ACCORDANCE WITH THE DETOUR PLAN AND WILL BE PAID FOR UNDER ITEM *801000 - MAINTENANCE OF TRAFFIC AND THEIR RESPECTIVE ITEMS.

5. THE USE OF MILLINGS AND GRADED AGGREGATE BASE COURSE (GABC) IN THE TRAVEL WAY, TEMPORARY TRAVEL WAY, HIGH VOLUME ENTRANCES AND ACCESS RAMP FOR THE PURPOSE OF PROVIDING A TEMPORARY ROADWAY SURFACE, POTHOLE REPAIR, TAPERED EDGE FOR UTILITIES, BUTT JOINTS, AND LONGITUDINAL DROP-OFFS (MILLING AND PAVING OPERATIONS) IS PROHIBITED UNLESS IT IS OTHERWISE DESIGNATED TO BE USED IN THE CONTRACT PLANS. USE COLD PATCH, BITUMINOUS CONCRETE, BITUMINOUS CONCRETE WEDGE, OR TAPER MILL, AS NOTED IN THE CONTRACT DOCUMENTS OR APPROVED BY THE ENGINEER. PAYMENT FOR COLD PATCH, BITUMINOUS CONCRETE OR BITUMINOUS CONCRETE WEDGE SHALL BE PAID AS NOTED IN THE CONTRACT DOCUMENTS. TAPER MILL BITUMINOUS CONCRETE SHALL BE PAID UNDER THE BITUMINOUS CONCRETE MILLING ITEM.

Vincent W. Davis **02/15/2019**

DELDOT STORMWATER ENGINEER — DATE

"I CERTIFY TO THE BEST OF MY KNOWLEDGE AND BELIEF THAT THESE PLANS MEET THE REQUIREMENTS OF THE DELAWARE SEDIMENT AND STORMWATER REGULATIONS AND THAT ALL CLEARING, GRADING, AND CONSTRUCTION WILL BE ACCOMPLISHED PURSUANT TO THE PLAN."

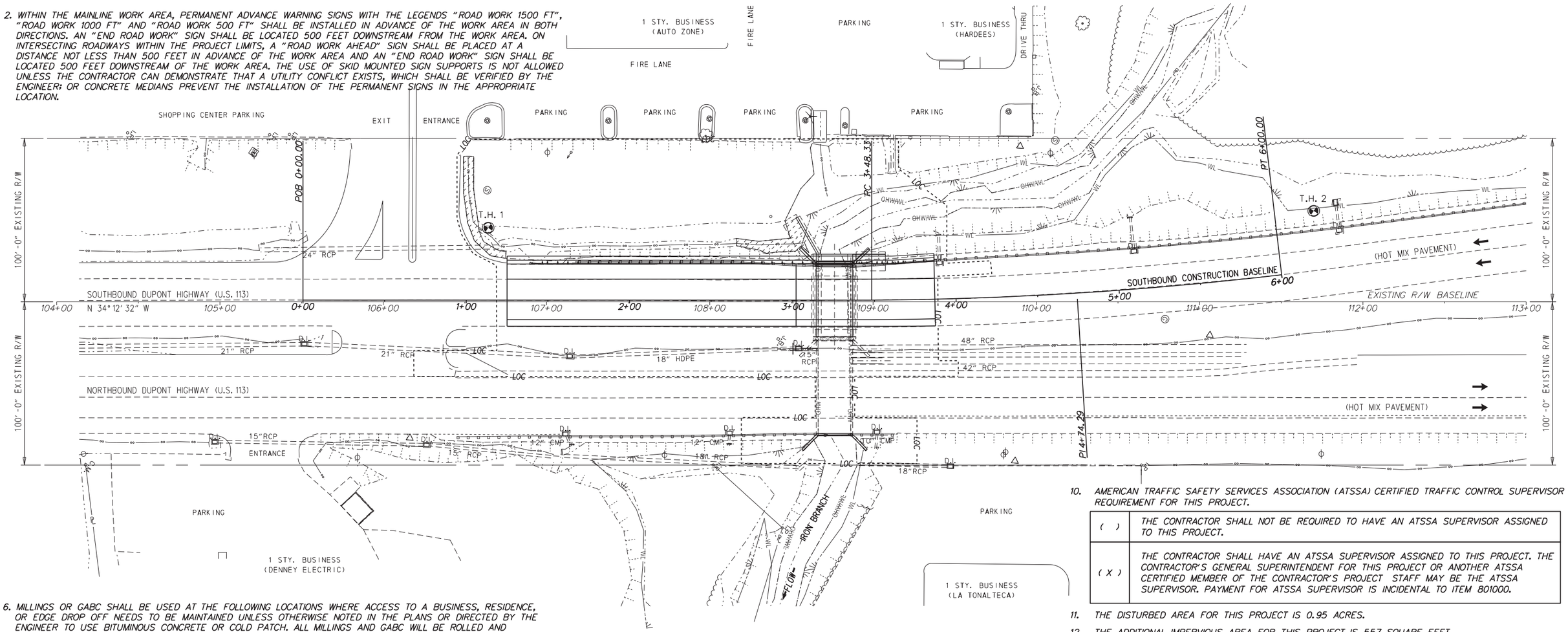

6. MILLINGS OR GABC SHALL BE USED AT THE FOLLOWING LOCATIONS WHERE ACCESS TO A BUSINESS, RESIDENCE, OR EDGE DROP OFF NEEDS TO BE MAINTAINED UNLESS OTHERWISE NOTED IN THE PLANS OR DIRECTED BY THE ENGINEER TO USE BITUMINOUS CONCRETE OR COLD PATCH. ALL MILLINGS AND GABC WILL BE ROLLED AND COMPACTED TO HELP PREVENT THE MATERIAL FROM UNRAVELLING:
   a. EDGE OF ROADWAY DROP-OFF

7. GRADING AND MAINTAINING BASE COURSE THAT IS BEING USED FOR ROADWAY WEDGE/FILLET BETWEEN TRAVEL LANES AND PAVEMENT BOX, EDGE OF TRAVELWAY, DRIVEWAY OR ENTRANCE ACCESS SHALL BE INCIDENTAL TO ITEM *801000 - MAINTENANCE OF TRAFFIC. THE BASE COURSE MATERIAL SHALL BE PLACED AT NO GREATER THAN THE SLOPE SPECIFIED IN TABLE 6G-1 OF THE DELAWARE MUTCD AND SHALL BE COMPACTED. EXCESS BASE COURSE MATERIAL SHALL BE PUSHED AHEAD AND USED IN THE NEXT SEGMENT AND SHALL BE INCIDENTAL TO THE PARTICULAR BASE COURSE PAY ITEM. NO SEPARATE PAYMENT SHALL BE MADE FOR MILLINGS OR GABC TEMPORARY ROADWAY MATERIAL (TRM) USED TO PROTECT EDGE DROP-OFFS, UNLESS THE MATERIAL IS EVENTUALLY UTILIZED AS PART OF A PERMANENT ROADWAY AT WHICH TIME THE MATERIAL WOULD BE PAID FOR UNDER THE RESPECTIVE CONTRACT MATERIAL ITEM.

8. VERTICAL DIFFERENCES SHALL BE CORRECTED IN ACCORDANCE WITH TABLE 6G-1 OF THE DELAWARE MUTCD.

9.

EROSION POTENTIAL FOR THIS PROJECT	CONTRACTOR EROSION AND SEDIMENT CONTROL SUPERVISOR REQUIREMENT
( ) INSIGNIFICANT	NONE
( ) MINOR	CONTRACTOR TRAINING PROGRAM, AS DEFINED IN SECTION 6.2 OF THE DELAWARE SEDIMENT AND STORMWATER REGULATIONS.
(X) MAJOR	CERTIFIED CONSTRUCTION REVIEWER (CCR), AS DEFINED IN SECTION 6.3 OF THE DELAWARE SEDIMENT AND STORMWATER REGULATIONS.

10. AMERICAN TRAFFIC SAFETY SERVICES ASSOCIATION (ATSSA) CERTIFIED TRAFFIC CONTROL SUPERVISOR REQUIREMENT FOR THIS PROJECT.

( )	THE CONTRACTOR SHALL NOT BE REQUIRED TO HAVE AN ATSSA SUPERVISOR ASSIGNED TO THIS PROJECT.
(X)	THE CONTRACTOR SHALL HAVE AN ATSSA SUPERVISOR ASSIGNED TO THIS PROJECT. THE CONTRACTOR'S GENERAL SUPERINTENDENT FOR THIS PROJECT OR ANOTHER ATSSA CERTIFIED MEMBER OF THE CONTRACTOR'S PROJECT STAFF MAY BE THE ATSSA SUPERVISOR. PAYMENT FOR ATSSA SUPERVISOR IS INCIDENTAL TO ITEM 801000.

11. THE DISTURBED AREA FOR THIS PROJECT IS 0.95 ACRES.

12. THE ADDITIONAL IMPERVIOUS AREA FOR THIS PROJECT IS 557 SQUARE FEET.

13. THE SEDIMENT AND STORMWATER MANAGEMENT PLANS HAVE BEEN APPROVED BY DELDOT'S STORMWATER ENGINEER UNDER DELDOT'S DELEGATED AUTHORITY. THE SEDIMENT AND STORMWATER MANAGEMENT PLANS ARE VALID FOR A FIVE YEAR PERIOD, BEGINNING ON THE DATE THE STORMWATER ENGINEER SIGNED THE CONSTRUCTION TITLE SHEET. IF THE FINAL ACCEPTANCE OF THE PROJECT IS ANTICIPATED TO EXTEND BEYOND THE FIVE YEARS, THE CONTRACTOR WILL INFORM THE ENGINEER THREE MONTHS PRIOR TO THE EXPIRATION OF THE APPROVED SEDIMENT AND STORMWATER MANAGEMENT PLANS. THE STORMWATER ENGINEER WILL REVIEW THE CURRENT SEDIMENT AND STORMWATER MANAGEMENT PLAN AND ISSUE AN EXTENSION WITH ANY APPROPRIATE MODIFICATIONS.

ADDENDA / REVISIONS	

SCALE 0 30 60 90 FEET

BR 3-507 ON US113 OVER IRON BRANCH

CONTRACT	BRIDGE NO. 3-507	CONSTRUCTION PHASING, M.O.T., AND EROSION CONTROL PLAN – PHASE 1	SECTION BR
T201307301	DESIGNED BY: JWK		SHEET NO. 17
COUNTY SUSSEX	CHECKED BY: NED		

18-MAR-2019
18:44:44
Y:\SUSSEX\113\Bridge\T201307301\Plans\cp.dgn

PAVING NOTES (FOR DETOUR)

1. AT THE PRECONSTRUCTION MEETING, THE CONTRACTOR SHALL SUBMIT DETAILED DRAWINGS (INCLUDING BUT NOT LIMITED TO EXISTING STRIPING LENGTHS, LANE AND SHOULDER WIDTHS, TURN LANE LENGTHS, LOCATIONS OF STOP BARS, TURN ARROWS, CROSSWALKS AND RAILROAD CROSSINGS) THAT DEPICT THE EXISTING PAVEMENT MARKINGS FOR EACH PROJECT LOCATION. THESE DRAWINGS WILL BE REVIEWED BY THE DEPARTMENT'S TRAFFIC SECTION TO DETERMINE IF ANY CHANGES TO THE FINAL PAVEMENT MARKINGS ARE REQUIRED. FINAL PAVEMENT MARKINGS SHALL CONFORM TO ALL EXISTING PATTERNS UNLESS OTHERWISE DIRECTED BY THE ENGINEER.

   THE DEPARTMENT WILL PROVIDE STRIPING LAYOUT AT LOCATIONS WHERE NO PAVEMENT MARKINGS PREVIOUSLY EXISTED. IF DEPARTMENT FORCES PROVIDE STRIPING LAYOUT ON LOCATIONS WHERE MARKINGS PREVIOUSLY EXISTED, THEN THE CONTRACTOR SHALL REIMBURSE THE DEPARTMENT FOR THE LAYOUT COSTS.

   UNLESS OTHERWISE DIRECTED BY THE ENGINEER, WHITE EDGE LINES SHALL WRAP AROUND THE RADIUS OF ALL SIDE STREETS AND MAJOR COMMERCIAL ENTRANCES TO A TANGENT POINT. YELLOW CENTERLINES SHALL BE CONTINUOUS AROUND MEDIAN ISLANDS. ALL DOUBLE YELLOW CENTERLINES SHALL BE PLACED IN A 5-6-5 CONFIGURATION (2 EACH, 5" YELLOW STRIPES WITH A 6" GAP BETWEEN).

2. ANY ERRONEOUS MARKING WILL NOT BE PAID FOR AND SHALL BE CORRECTED IMMEDIATELY AT THE CONTRACTORS EXPENSE. ERRONEOUS MARKINGS OR SHADOWS THAT EXCEED ONE (1) INCH IN WIDTH SHALL BE REMOVED BY EITHER SAND OR WATER BLASTING AS DIRECTED BY THE ENGINEER. NO OTHER REMOVAL METHODS WILL BE ALLOWED. A FLAT BLACK PAINT OR DRIVEWAY SEALER SHALL BE APPLIED IN THE AREA OF THE REMOVED MARKING TO MASK THE REPAIR. ANY DAMAGE TO THE PAVEMENT CAUSED BY REMOVAL OF ERRONEOUS MARKINGS SHALL BE REPAIRED / REPLACED TO THE SATISFACTION OF THE ENGINEER AT THE CONTRACTORS EXPENSE.

3. STOP LINES "BARS" SHALL BE INSTALLED IN ACCORDANCE WITH SECTION 3B.16 OF THE 2011 DELAWARE MUTCD.

4. ALL CROSSWALKS SHALL BE INSTALLED IN ACCORDANCE WITH SECTION 3B.18 OF THE 2011 DELAWARE MUTCD.

5. UNLESS SPECIFIED, OVERLAY WIDTHS SHALL MATCH EXISTING WIDTHS.

6. THE COST OF CLIPPING BACK THE EDGES OF THE ROADWAY, SHOULDERS, AND THE FIRST 3' OF UNPAVED DRIVEWAY ENTRANCES, PICKING UP AND DISPOSING OF WASTE AND EXCESS MATERIAL, AND CLEANING THE EXISTING PAVEMENT PRIOR TO OVERLAY SHALL BE INCIDENTAL TO ITEM #760010. PREPARING UNPAVED DRIVEWAY ENTRANCES BEYOND THE FIRST 3' SHALL BE PAID UNDER ITEM 202000.

7. BUTT JOINTS SHALL BE PLACED AT ALL INTERSECTING HOT MIX ROADS AND ANY OTHER LOCATIONS AS DIRECTED BY THE ENGINEER. BUTT JOINTS AT DRAINAGE STRUCTURES NOT TO BE RESURFACED SHALL BE AS PER THE INCLUDED PLAN DETAIL OR LOCATION NOTES. BUTT JOINTS CUT PRIOR TO THE DAY OF THE PAVEMENT OVERLAY SHALL BE RAMPED WITH HOT MIX TRM. IN MILLING AREAS, THERE WILL BE NO SEPARATE PAYMENT FOR BUTT JOINTS. AFTER PAVEMENT MILLING, ALL TRANSVERSE VERTICAL DIFFERENCES, RAISED EDGES OF MANHOLES, CATCH BASINS, WATER VALVE BOXES, ETC. SHALL BE RAMPED WITH HOT-MIX TRM AT A 20:1 OR FLATTER SLOPE PRIOR TO OPENING THE ROADWAY TO TRAFFIC. PAVEMENT MILLINGS WILL NOT BE ALLOWED FOR USE AS RAMPING MATERIAL.

8. TAPER MILLING IS INTENDED FOR MILLING IN THE AREA OF FIXED STRUCTURES (I.E. CURBS GUARDRAIL, ETC.) THE MILLED DEPTH AT THE STRUCTURE SHALL BE THE DEPTH OF THE PROPOSED OVERLAY AND 0" AT A DISTANCE OF +/- 6½' FROM THE STRUCTURE. THE COMPUTED DEPTH FOR PAYMENT PURPOSES IS THE AVERAGE OF THE TWO DEPTHS.

9. ALL MILLED MATERIAL SHALL REMAIN THE PROPERTY OF THE CONTRACTOR UNLESS OTHERWISE STATED.

10. ALL PAVING, INCLUDING TURN LANES, SHOULDERS AND INTERSECTIONS, IS TO BE COMPLETED WITHIN SEVEN (7) CALENDAR DAYS. FAILURE TO COMPLY WILL RESULT IN A SUSPENSION OF ALL OTHER CONTRACT WORK WITH TIME CHARGES CONTINUING TO BE ASSESSED.

11. THE CONTRACTOR SHALL TAKE CARE IN REMOVING PAVEMENT AROUND UTILITIES, BUTT JOINTS, CURBING, ETC. SO THAT EXISTING PAVEMENT BEYOND THE SPECIFIED DEPTHS IS NOT DAMAGED. ANY DAMAGE CAUSED BY THE CONTRACTOR'S OPERATIONS MAY RESULT IN PLACING LEVELING COURSES AT THE CONTRACTOR'S EXPENSE. THE REMOVAL AND CLEAN UP OF THE HOT MIX RESIDUE WEDGE REMAINING AFTER MILLING OPERATIONS SHALL BE INCIDENTAL TO THE MILLING ITEM. THE REMOVAL OF EXISTING RAISED PAVEMENT MARKERS (RPM'S) SHALL BE INCIDENTAL TO THE APPLICABLE MILLING AND/OR RECLAMATION ITEMS.

COMMENTS:

1. RECOMMENDED M.O.T. TYPICAL APPLICATION, TA-10 (LANE CLOSURE ON TWO-WAY ROAD USING FLAGGERS)

2. EXISTING R.O.W. FOR THIS LOCATION IS 25' FROM THE CENTERLINE OF THE ROADWAY ON BOTH SIDES AS PER ARCHIVE PLANS.
   A. CONTRACT #1487, ROAD 338

3. THE GABC ITEM #301001 AND QUANTITY IS FOR UNIMPROVED DRIVEWAYS. CRUSHED CONCRETE AND MILLINGS SHALL NOT BE PERMITTED AS A SUBSITUTE.

4. PLACE PAVEMENT SAFETY EDGE AS PER DETAIL P-6 IN STANDARD CONSTRUCTION DETAILS.

5. ALL PAVEMENT VERTICAL DIFFERENCES MUST BE ADDRESSED AT THE END OF EACH DAY IN ACCORDANCE WITH THE DELAWARE MANUAL ON TRAFFIC CONTROL DEVICES (DE-MUTCD-2011), CHAPTER 6, PAGE 6G-14, SECTION 6G.20 - VERTICAL DIFFERENCES.

PAVING LIMITS:

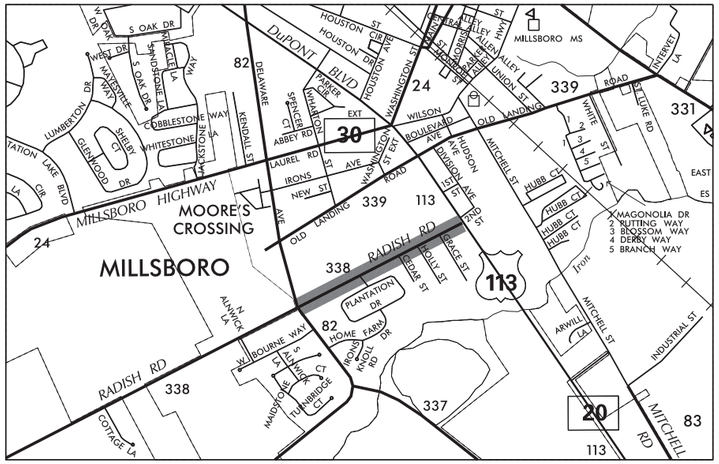

MILLING AND OVERLAY NOTES

1. INTERSECTION LIMITS BELOW ARE FROM THE CENTERLINE OF THE INTERSECTIONS AND ARE APPROX. (+/-):

   A. MILL AND OVERLAY RADISH ROAD FROM THE INTERSECTION OF SOUTHBOUND U.S. 113 TO THE INTERSECTION OF HICKORY HILL ROAD.

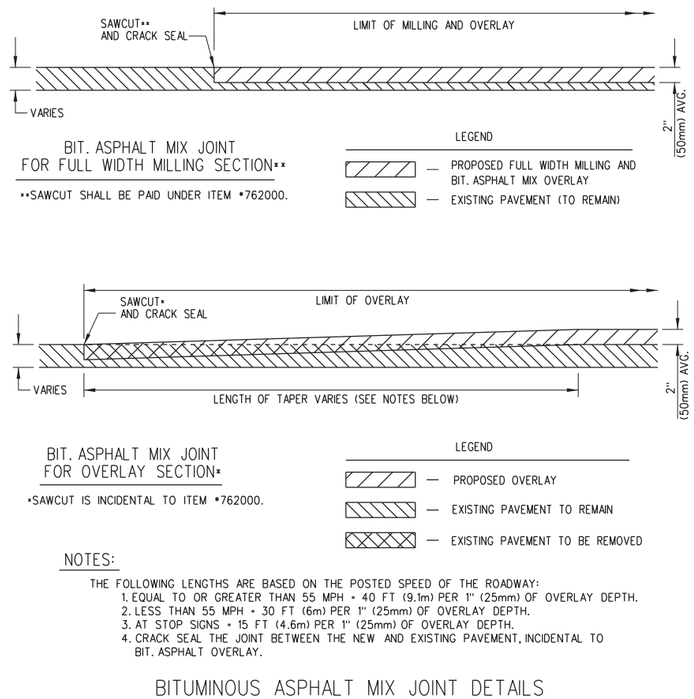

NOTES:

THE FOLLOWING LENGTHS ARE BASED ON THE POSTED SPEED OF THE ROADWAY:
1. EQUAL TO OR GREATER THAN 55 MPH = 40 FT (9.1m) PER 1" (25mm) OF OVERLAY DEPTH.
2. LESS THAN 55 MPH = 30 FT (6m) PER 1" (25mm) OF OVERLAY DEPTH.
3. AT STOP SIGNS = 15 FT (4.6m) PER 1" (25mm) OF OVERLAY DEPTH.
4. CRACK SEAL THE JOINT BETWEEN THE NEW AND EXISTING PAVEMENT, INCIDENTAL TO BIT. ASPHALT OVERLAY.

BITUMINOUS ASPHALT MIX JOINT DETAILS

ADDENDA / REVISIONS		NOT TO SCALE	BR 3-507 ON US113 OVER IRON BRANCH	CONTRACT	BRIDGE NO. 3-507	DETOUR PAVING NOTES (PHASE 1)	SECTION
				T201307301	DESIGNED BY: JWK		BR
				COUNTY			SHEET NO.
				SUSSEX	CHECKED BY: NED		18

18-MAR-2019
10:43:37
Y:\SUSSEX\113\Bridge\T201307301\Plans\pn.dgn

CONSTRUCTION SEQUENCE (PHASE 2 - STREAM DIVERSION)

1. INSTALL M.O.T. DEVICES FOR SOUTHBOUND AND NORTHBOUND SHOULDER CLOSURES (TA-3A) IN ACCORDANCE WITH THE 2011 DELAWARE MUTCD.

2. INSTALL SILT FENCE (ITEM #905001) ON THE UPSTREAM SIDE, EXCEPT AT CONNECTIONS TO THE SANDBAG DIKES (PAYMENT #909005) AND PLACE COMPOST FILTER LOGS (ITEM #907017).

3. STABILIZE THE PROPOSED DISCHARGE AREA OF THE PIPE WITH A 5' x 5' AREA OF R-5 RIPRAP (ITEM #909005). INSTALL 3'-0" TEMPORARY DIVERSION PIPE (ITEM #909005) AT LOCATION SHOWN. PLACE THE UPSTREAM END OF PIPE 6-INCHES TO 12-INCHES ABOVE EXISTING STREAM BOTTOM USING PIPE WITH WATER-TIGHT JOINTS. SECURE THE PIPE TO MINIMIZE MOVEMENT UNDER USE TO PREVENT LEAKAGE IN THE WORK AREA. CONSTRUCT THE SANDBAG DIKES, AT THE LOCATIONS SHOWN, WITH A TOP EL. OF 11.00 OR 6 INCHES BELOW TOP OF STREAM BANK (WHICHEVER IS LOWER) WITH A 1' x 5' WEIR OPENING UPSTREAM. UPSTREAM SANDBAG DIKES SHALL BE CONSTRUCTED BEFORE DOWNSTREAM SANDBAG DIKES. ELEVATION OF THE DOWNSTREAM SANDBAG DIKES SHALL NOT BE HIGHER THAN THE LOWEST ELEVATION OF THE UPSTREAM SANDBAG DIKES. CONNECT SILT FENCE TO BOTH UPSTREAM AND DOWNSTREAM SANDBAG DIKES TO COMPLETELY ENCLOSE WORK AREA. THE BASE FLOW THROUGHOUT THE TEMPORARY PIPE SHALL BE 120.00 CFS.

4. INSTALL SUMP PIT (ITEM #906003) AND PORTABLE SEDIMENT TANK (ITEM #906001) AS A SEDIMENT TRAPPING DEVICE. DEWATER THE WORK AREA IN ACCORDANCE WITH SECTION 902 OF THE STANDARD SPECIFICATIONS. DISCHARGE CLEAN EFFLUENT FROM THE APPROVED SEDIMENT TRAPPING DEVICE AT THE STABILIZED OUTLET OF THE TEMPORARY DRAINAGE PIPE OR ON OTHER STABLE OUTLET AS APPROVED BY THE ENGINEER.

5. INSTALL ADDITIONAL SUMP PITS (ITEM #906003) AND SANDBAGS AS NEEDED TO DIVERT FLOW FROM EXISTING STORMWATER PIPES (48", 42" AND 15") LOCATED IN APPROXIMATELY THE MIDDLE OF THE STRUCTURE.

6. STABILIZE ALL DISTURBED AREAS PRIOR TO PROCEEDING TO THE NEXT PHASE.

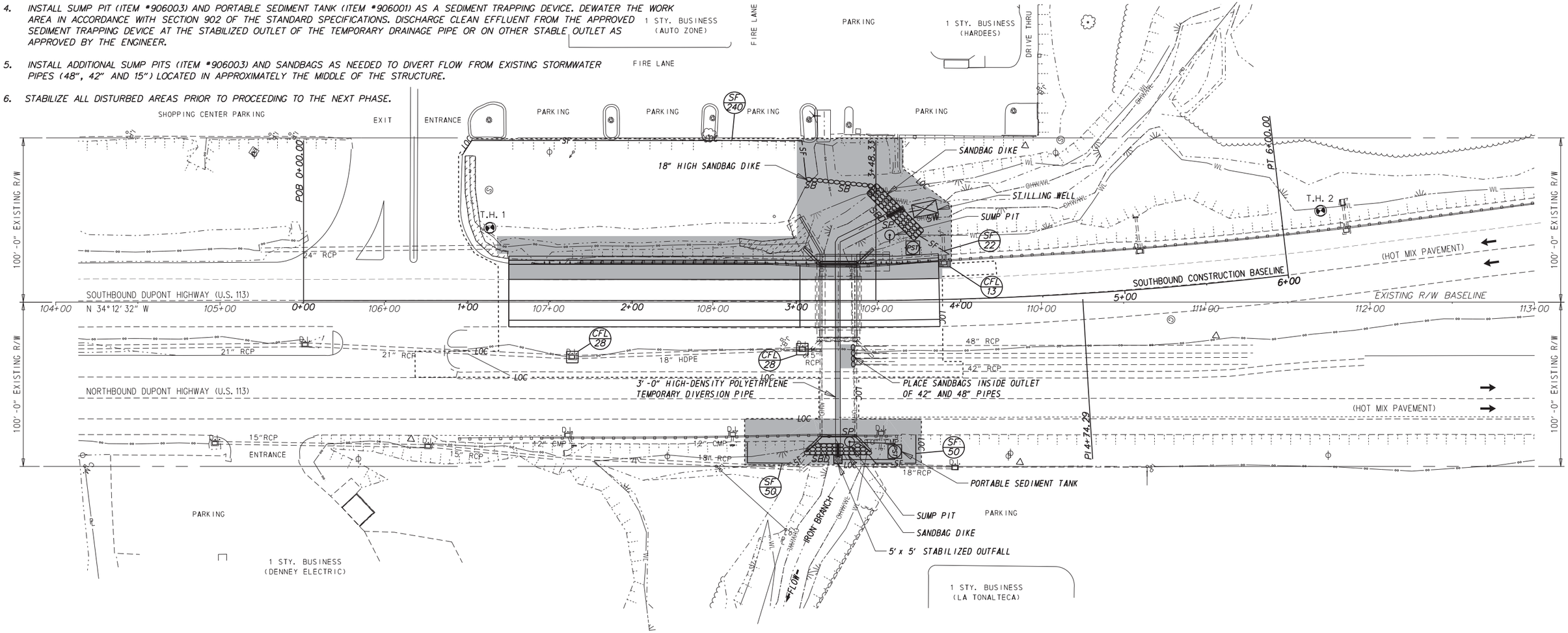

ADDENDA / REVISIONS		SCALE	BR 3-507 ON US113 OVER IRON BRANCH	CONTRACT	BRIDGE NO. 3-507	CONSTRUCTION PHASING, M.O.T., AND EROSION CONTROL PLAN – PHASE 2	SECTION
		0 30 60 90 FEET		T201307301	DESIGNED BY: JWK		BR
				COUNTY			SHEET NO.
				SUSSEX	CHECKED BY: NED		19

18-MAR-2019
10:44:43
Y:\SUSSEX\113\Bridge\T201307301\Plans\cp.dgn

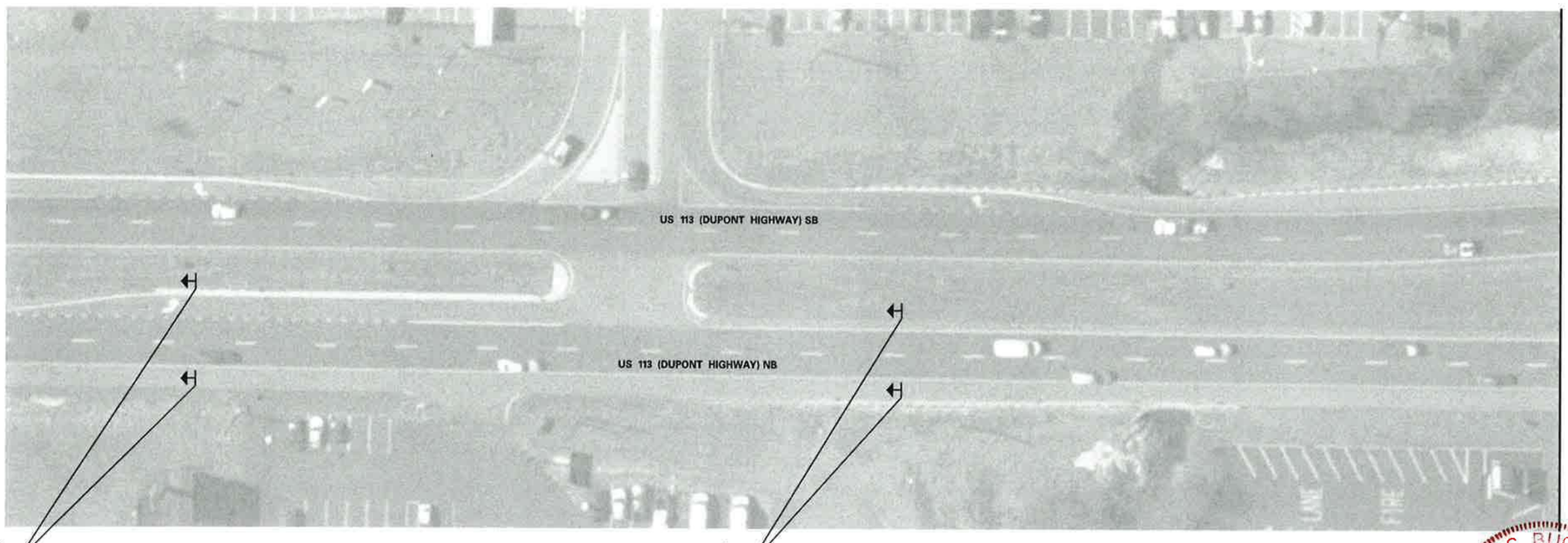

ROAD WORK AHEAD

INSTALL 700' UPSTREAM OF TURN LANE CLOSURE

LEFT TURN LANE CLOSED AHEAD

INSTALL 350' UPSTREAM OF TURN LANE CLOSURE

MATCH LINE – SHEET TS-21

PREPARED BY
DELDOT – TRANSPORTATION SOLUTIONS
TRAFFIC SAFETY

THIS SEAL APPLIES TO ALL SHEETS BEARING THE "TS" SECTION DESIGNATION.

2/15/19
DATE

MARK S. BUCKALEW
LICENSE
No. 16738
DELAWARE
PROFESSIONAL ENGINEER
SEAL

ADDENDA / REVISIONS		NOT TO SCALE	BR 3-507 ON US113 OVER IRON BRANCH	CONTRACT T201307301	ROAD NO. US 113/020	CONSTRUCTION PHASING, M.O.T. AND EROSION CONTROL PLAN (SHEET 1 OF 4)	SECTION TS
				COUNTY SUSSEX	DESIGNED BY: YFH		SHEET NO. 20
					CHECKED BY: MSB		

$DATES
$TIMES
$FILES
Y:\TRAFFIC\SAFETY\CAPITAL PROJECTS\SUSSEX\T201307301_BR_3-507_US_113_OVER_IRON_BRANCH\IRON_BRANCH_LANE_CLOSURES.DGN

TEMPORARY PAVEMENT MARKINGS LEGEND		
SYMBOL	ITEM	QUANTITY
(A)	4" SOLID YELLOW TEMPORARY TAPE PAVEMENT STRIPING (ITEM 817009)	1,500 LF
(B)	6" BLACKOUT TAPE (ITEM 817008)	370 LF

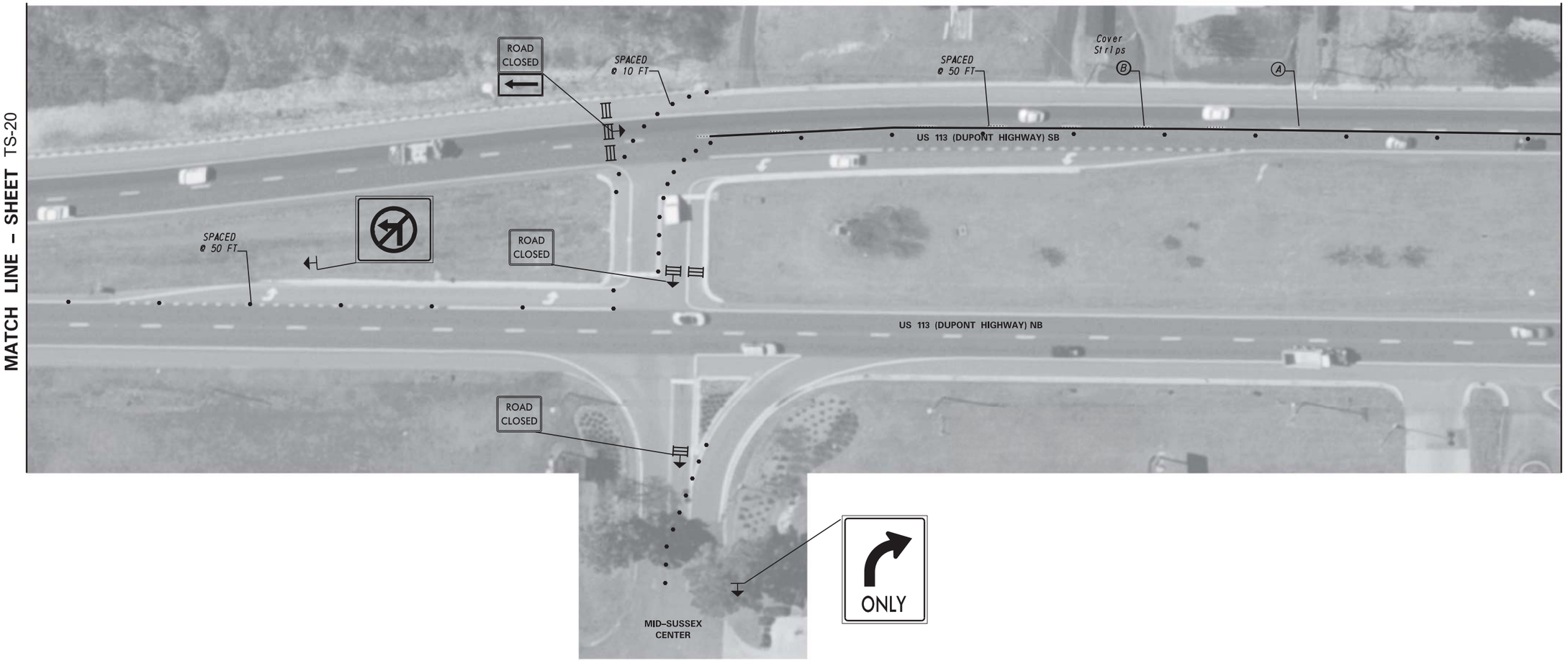

ADDENDA / REVISIONS		NOT TO SCALE	BR 3-507 ON US113 OVER IRON BRANCH	CONTRACT T201307301	ROAD NO. US 113/020	CONSTRUCTION PHASING, M.O.T., AND EROSION CONTROL PLAN (SHEET 2 OF 4)	SECTION TS
				COUNTY SUSSEX	DESIGNED BY: YFH		SHEET NO. 21
					CHECKED BY: MSB		

$DATE$
$TIME$
$FILE$
Y:\TRAFFIC\SAFETY\CAPITAL PROJECTS\SUSSEX\T201307301_BR_3-507_US_113_OVER_IRON_BRANCH\IN_LINE_CLOSURE\SB00_IRON.DGN

PAVEMENT MARKINGS LEGEND		
SYMBOL	ITEM	QUANTITY
(A)	4" SOLID YELLOW TEMPORARY TAPE PAVEMENT STRIPING (ITEM 817009)	1,500 LF
(B)	6" BLACKOUT TAPE (ITEM 817008)	370 LF

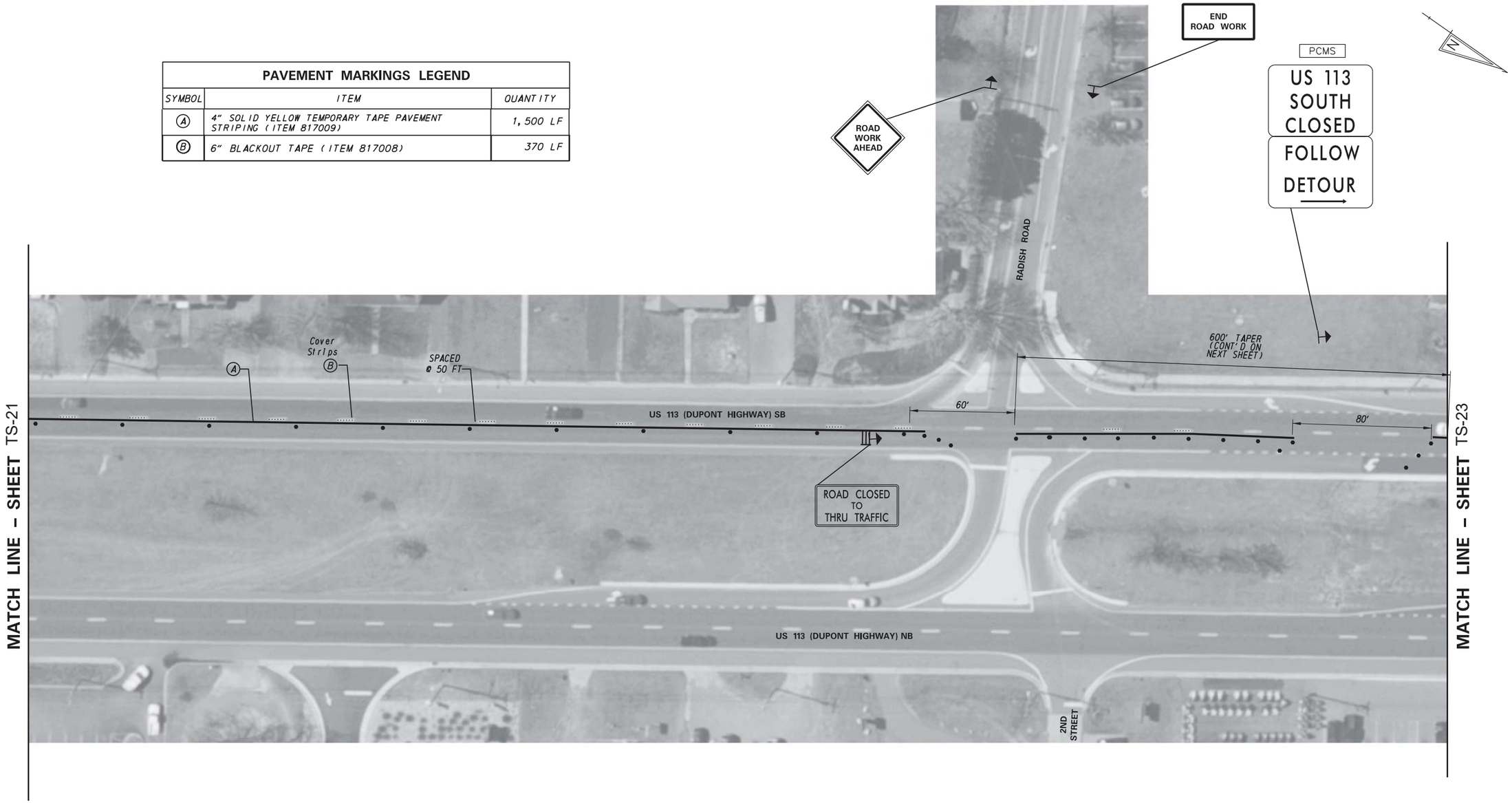

ADDENDA / REVISIONS		NOT TO SCALE	BR 3-507 ON US113 OVER IRON BRANCH	CONTRACT T201307301	ROAD NO. US 113/020	CONSTRUCTION PHASING, M.O.T. AND EROSION CONTROL PLAN (SHEET 3 OF 4)	SECTION TS
				COUNTY SUSSEX	DESIGNED BY: YFH		SHEET NO. 22
					CHECKED BY: MSB		

$DATE$
$TIME$
$FILE$
Y:\TRAFFIC\SAFETY\CAPITAL PROJECTS\SUSSEX\T201307301_BR_3-507_US_113_OVER_IRON_BRANCH\IRON_BRANCH_LANE_CLOSURE\SBOO_IRON.DGN

ADD NOTES:

1. ADD A VMS SB US 113, SOUTH OF SR 20

US 113 CLOSED X MILES	TRUCKS FOLLOW DETOUR

2. ADD A VMS ALONG SR 24
(USE PCMS 1 FROM TRUCK DETOUR PLAN)

PAVEMENT MARKINGS LEGEND		
SYMBOL	ITEM	QUANTITY
Ⓐ	4" SOLID YELLOW TEMPORARY TAPE PAVEMENT STRIPING (ITEM 817009)	1,500 LF
Ⓑ	6" BLACKOUT TAPE (ITEM 817008)	370 LF

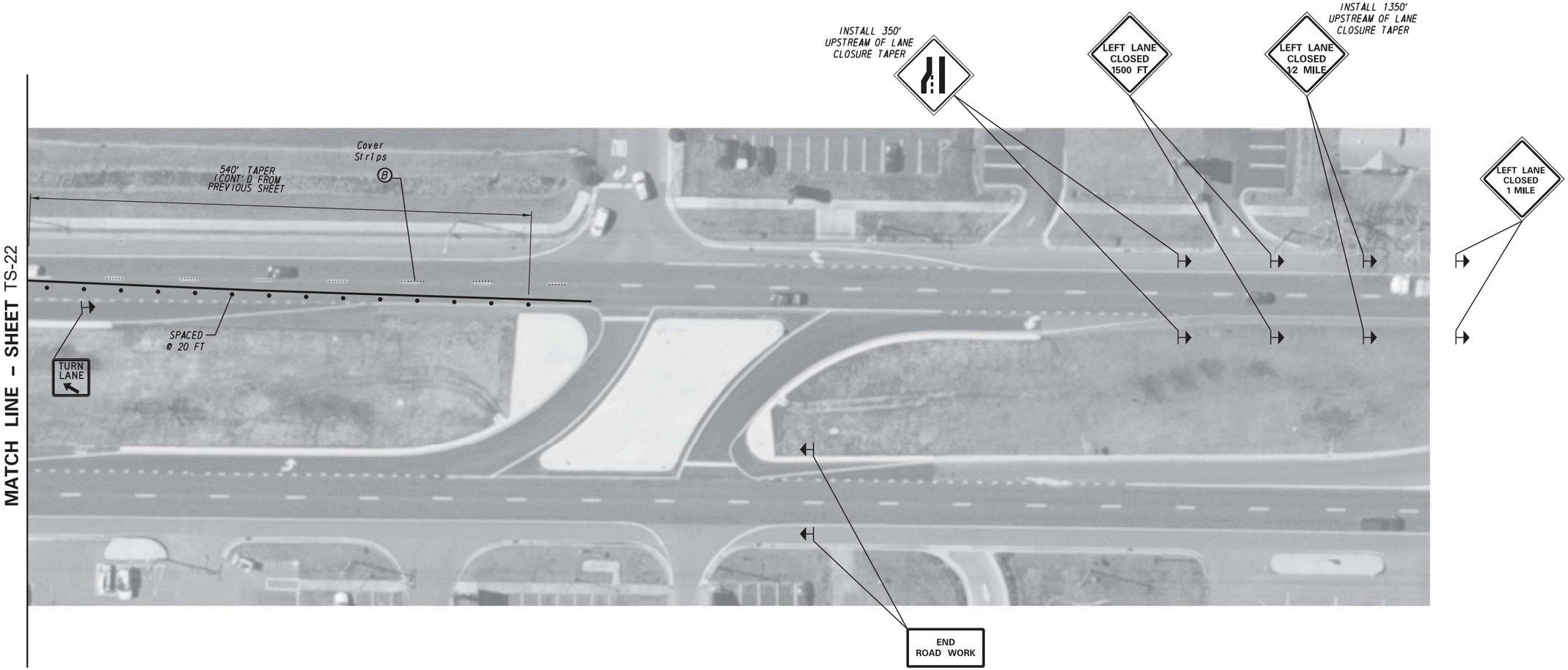

ADDENDA / REVISIONS		NOT TO SCALE	BR 3-507 ON US113 OVER IRON BRANCH	CONTRACT T201307301	ROAD NO. US 113/020	CONSTRUCTION PHASING, M.O.T. AND EROSION CONTROL PLAN (SHEET 4 OF 4)	SECTION TS
				COUNTY SUSSEX	DESIGNED BY: YFH		SHEET NO. 23
					CHECKED BY: MSB		

$DATE$
$FILE$
$FILE$
X:\TRAFFIC\SAFETY\CAPITAL PROJECTS\SUSSEX\T201307301_BR_3-507_US_113_OVER_IRON_BRANCH\IRON_BRANCH_LANE_CLOSURES_SR00_IRON.DGN

CONSTRUCTION SEQUENCE (PHASE 3 - FRAME CONSTRUCTION)

1. INSTALL CRASH CUSHION ARRAY (ITEM #809007 & 809008), TYPE 3 BARRICADES (ITEM #813001), TEMPORARY CONSTRUCTION BARRIER (ITEM #807002) AND M.O.T. DEVICES IN ACCORDANCE WITH THE DETOUR PLAN AND CLOSE THE SOUTHBOUND LANES OF U.S. 113 DUPONT HIGHWAY. CLOSURE SHALL ONLY LAST FOR A TOTAL OF 10 DAYS AND SHALL BE COORDINATED WITH THE DELAWARE DEPARTMENT OF TRANSPORTATION, TRAFFIC MANAGEMENT CENTER.

2. EXCAVATE HOTMIX, REMOVE EXISTING FRAME, WINGWALLS, AND CONCRETE ENCASED BEAMS AT LOCATIONS SHOWN. REMOVE AND STOCKPILE EXISTING R-7 IN CHANNEL BOTTOM AND R-5 ALONG SLOPES. REMOVE EXISTING CONCRETE FOOTERS, ABUTMENTS AND ANY ADDITIONAL PORTIONS WITHIN AREA OF PROPOSED PLACEMENT. INSTALL PROPOSED PRECAST CONCRETE FOOTERS, FRAME, WINGWALLS, HEADWALLS, MOMENT SLAB, DRAINAGE PIPES AND DRAINAGE INLETS IN ACCORDANCE WITH THE PLANS. RE-USE AND PLACE EXISTING R-7 AND R-5 RIPRAP IN THEIR RESPECTIVE LOCATIONS TO MATCH EXISTING STREAM ELEVATIONS.

3. PLACE HOT-MIX, GUARDRAIL, STRIPING AND COMPLETE ANY NECESSARY GRADING. REMOVE PHASE 2 M.O.T. DEVICES AND RE-OPEN THE ROADWAY.

4. STABILIZE ALL DISTURBED AREAS PRIOR TO PROCEEDING TO THE NEXT PHASE.

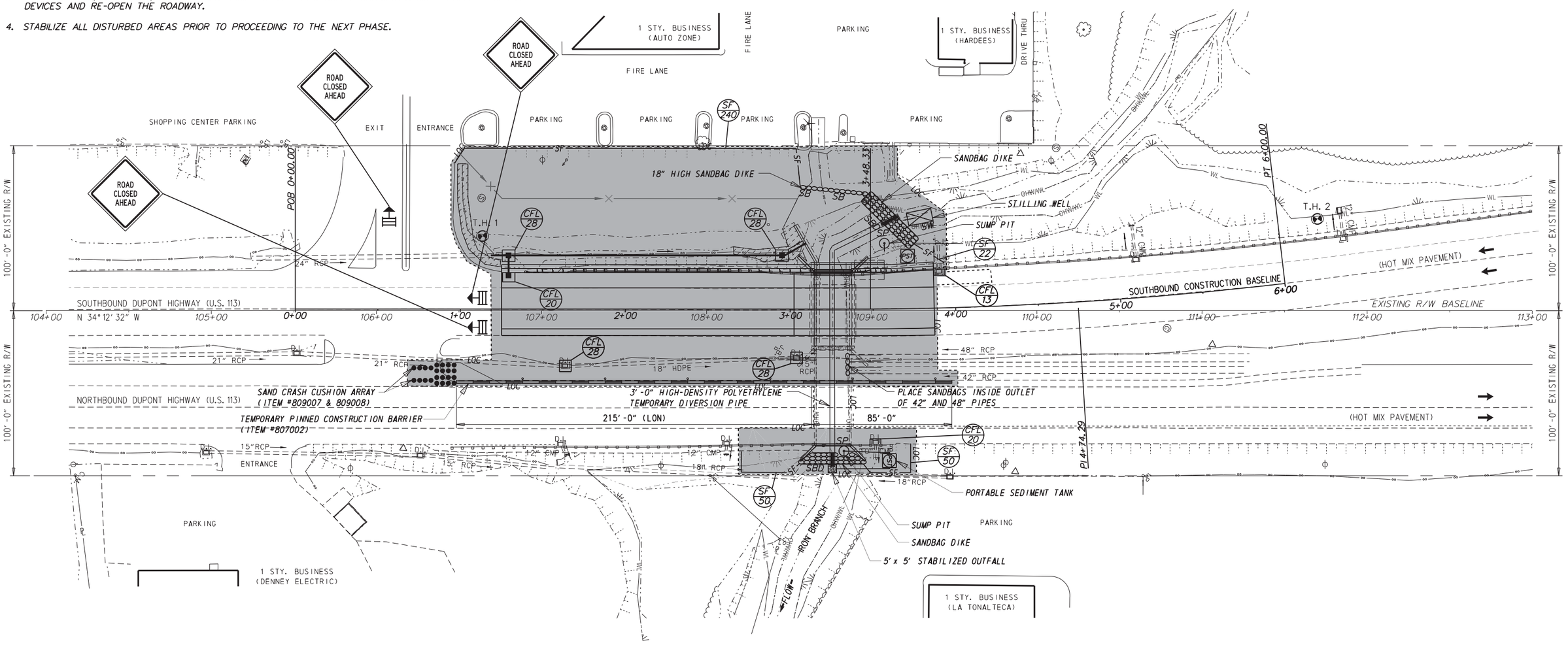

ADDENDA / REVISIONS		SCALE	BR 3-507 ON US113 OVER IRON BRANCH	CONTRACT	BRIDGE NO. 3-507	CONSTRUCTION PHASING, M.O.T., AND EROSION CONTROL PLAN – PHASE 3	SECTION
		0 30 60 90 FEET		T201307301	DESIGNED BY: JWK		BR
				COUNTY	CHECKED BY: NED		SHEET NO.
				SUSSEX			24

18-MAR-2019
Y:\SUSSEX\113\Bridge\T201307301\Plans\cp.dgn

CONSTRUCTION SEQUENCE (PHASE 4 - MILL/OVERLAY)

1. RE-INSTALL M.O.T. DEVICES FOR SHOULDER CLOSURES (TA-3A) AND LANE CLOSURES (TA-33) AS NEEDED IN ACCORDANCE WITH THE 2011 DELAWARE MUTCD.

2. COMPLETE MEDIAN GRADING, DITCH GRADING, PLACE RIPRAP ALONG DITCH, AND CLEANOUT EXISTING DRAINAGE INLETS IN ACCORDANCE WITH THE PLANS.

3. REMOVE DOWNSTREAM SUMP PIT, ADJUST ANY DISTURBED RIPRAP AND STREAMBED MATERIAL, AND GRADE AND STABILIZE ALL DISTURBED AREAS DOWNSTREAM. REMOVE TEMPORARY EROSION AND SEDIMENT CONTROL DEVICES DOWNSTREAM AFTER VEGETATION HAS STABILIZED ALL DISTURBED AREAS AS DIRECTED BY THE ENGINEER WITH CONCURRENCE FROM THE STORMWATER ENGINEER. REMOVAL OF EROSION AND SEDIMENT CONTROL DEVICES SHALL BE PERFORMED UNDER DELAWARE MUTCD TYPICAL APPLICATION 3A OR TYPICAL APPLICATION 33 (FIGURE 6H-33), AS SHOWN IN THE MANUAL.

4. REMOVE UPSTREAM DIVERSION AND TEMPORARY DIVERSION PIPE. GRADE AND STABILIZE ALL DISTURBED AREAS. REMOVE INLET PROTECTION AND TEMPORARY EROSION AND SEDIMENT CONTROL DEVICES AFTER FINAL VEGETATIVE STABILIZATION OF ALL DISTURBED AREAS AND WITH CONCURRENCE FROM DELDOT'S STORMWATER ENGINEER.

5. MILL FROM STA. 1+25.00 TO STA. 3+02.00 THEN OVERLAY REMAINING WIDTH OF THE ROAD WITH 2" OF HOTMIX, TYPE C. STRIPE THE ROADWAY AS SHOWN ON THE PLANS. COMPLETE ANY REMAINING WORK AND REPAIR ANY ROADSIDE ITEMS THAT MAY HAVE BEEN DISTRURBED DURING CONSTRUCTION.

6. REMOVE ALL M.O.T. DEVICES.

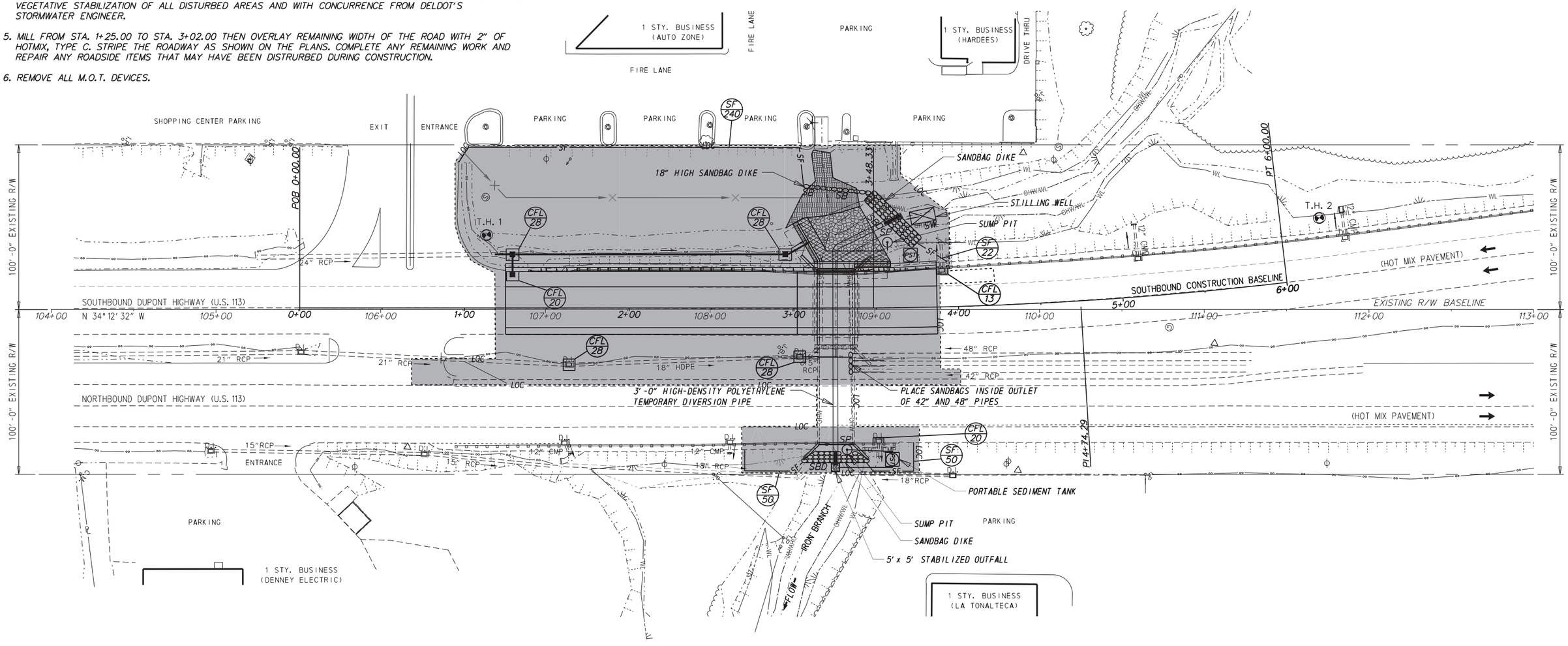

ADDENDA / REVISIONS		SCALE 0 30 60 90 FEET	BR 3-507 ON US113 OVER IRON BRANCH	CONTRACT T201307301	BRIDGE NO. 3-507	CONSTRUCTION PHASING, M.O.T., AND EROSION CONTROL PLAN – PHASE 4	SECTION BR
				COUNTY SUSSEX	DESIGNED BY: JWK		SHEET NO. 25
					CHECKED BY: NED		

18-MAR-2019
Y:\SUSSEX\113\Bridge\T201307301\Plans\cp.dgn

PORTABLE CHANGEABLE MESSAGE SIGNS

PRIOR TO DETOUR
(10 DAYS PRIOR TO BEGINNING OF DETOUR)

PCMS-1

US 113 SOUTH TO CLOSE	STARTING XX/XX/XX

DURING DETOUR
DISPLAY FOR ENTIRE DURATION
OF THE DETOUR

PCMS-2

US 113 SOUTH CLOSED	USE ALT ROUTE

PCMS-3

TURNING TRAFFIC AHEAD	PROCEED WITH CAUTION

SPECIAL SIGNS

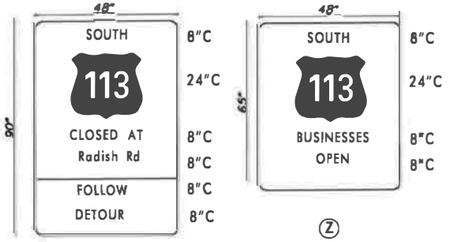

ONCOMING TRAFFIC DOES NOT STOP — W4-4bP 36" x 18" — AA

NOTES:

SIGNS SHALL BE BLACK ON RETROREFLECTIVE FLUORESCENT PRISMATIC ORANGE.

ROUTE SHIELD SHALL BE 30" X 24" BLACK LEGEND ON BACKGROUND.

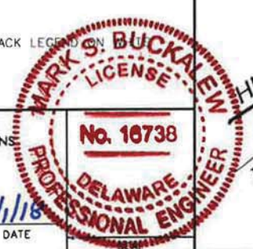

PREPARED BY
DELDOT – TRANSPORTATION SOLUTIONS
TRAFFIC SAFETY

THIS SEAL APPLIES TO ALL SHEETS BEARING THE "TS" SECTION DESIGNATION.

DATE 11/1/18

LEGEND

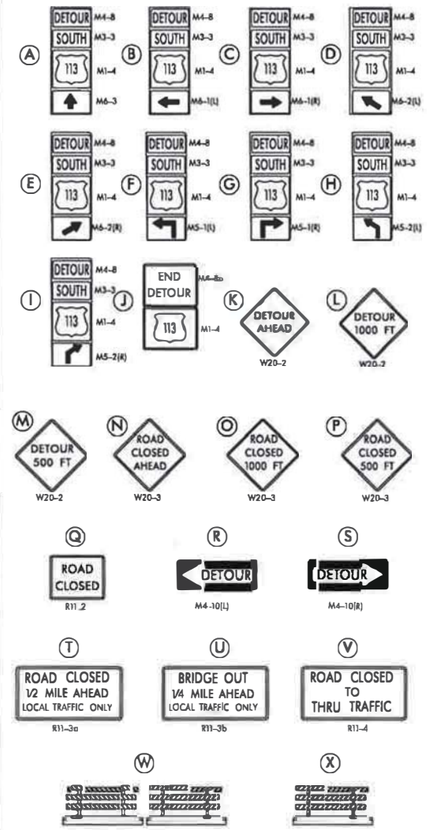

GENERAL NOTES

1. ALL DETOUR SIGNING, INCLUDING TRAILBLAZERS, ARE TO BE SUPPLIED AND MAINTAINED BY THE GENERAL CONTRACTOR IN COMPLIANCE WITH "THE DELAWARE MANUAL ON UNIFORM TRAFFIC CONTROL DEVICES" (DE MUTCD).
2. THE CONTRACTOR SHALL COMPLY WITH GUIDELINES IN "THE DELAWARE MANUAL ON UNIFORM TRAFFIC CONTROL DEVICES" (DE MUTCD PART 6) FOR BARRICADES AND SIGNS (AS PER LATEST REVISION.)
3. DESIGN OF ALL SIGNS SHALL BE IN ACCORDANCE WITH THE FHWA STANDARD HIGHWAY SIGNS BOOK.
4. SIZES OF ALL SIGNS SHALL BE IN ACCORDANCE WITH "THE DELAWARE MANUAL ON UNIFORM TRAFFIC CONTROL DEVICES" (DE MUTCD.) SIZE OF SIGN SHALL BE BASED ON TYPE OF ROADWAY ON WHICH THE SIGN IS INSTALLED.
5. THE COLORS, DIMENSIONS, AND CHARACTERISTICS OF ALL INTERSTATE, U.S. ROUTE, AND STATE ROUTE SHIELD SIGNS SHALL BE IN ACCORDANCE WITH SECTION 2D.11 OF "THE DELAWARE MANUAL ON UNIFORM TRAFFIC CONTROL DEVICES" (DE MUTCD.)
6. SIGNS NO LONGER IN USE SHALL BE COMPLETELY COVERED WITH NO RETROREFLECTIVE MATERIAL SHOWING, OR SHALL BE REMOVED, AS DIRECTED BY THE ENGINEER.
7. FIELD CONDITIONS MAY DICTATE CHANGES AT SOME TIME DURING THE LIFE OF THE CONTRACT. IN THE EVENT OF OMISSIONS OR CORRECTIONS, THE SIGNING PROVISIONS OF "THE DELAWARE MANUAL ON UNIFORM TRAFFIC CONTROL DEVICES" (DE MUTCD) WILL PREVAIL.
8. SIGNS "N" THROUGH "Q" AND "T" AND "V", THE WORD "ROAD" SHOULD BE CHANGED TO "RAMP", "RR XING", OR "BRIDGE" WHERE APPLICABLE.
9. WARNING SIGNS AND DETOUR TRAILBLAZERS SHALL BE MOUNTED ON BREAKAWAY POSTS AND HAVE RETROREFLECTIVE FLUORESCENT ORANGE SHEETING.
10. "W" BARRICADES SHALL COMPLETELY RUN THE FULL WIDTH OF THE ROADWAY.
11. BARRICADES SHALL BE A MINIMUM OF 6 FEET WIDE UNLESS DIRECTED BY THE ENGINEER.

DETOUR NOTES:

12. TRAFFIC OFFICER SHALL DIRECT TRAFFIC AT RADISH/HICKORY HILL INTERSECTION EACH DAY 6A–9A AND 3P–7P. TIME TO BE ADJUSTED BY ENGINEER AS NECESSARY.

ADDENDA / REVISIONS

NOT TO SCALE

BR 3-507 ON US113
OVER IRON BRANCH

CONTRACT	T201307301	ROAD NO.	US 113/020
COUNTY	SUSSEX	DESIGNED BY: YFH	CHECKED BY: MSB

VEHICULAR DETOUR PLAN

SECTION: TS
SHEET NO.: 26

LAST REVISED: 9/11/2018
$DATE$
$TIME$
$FILE$

PORTABLE CHANGEABLE MESSAGE SIGNS

DURING DETOUR
DISPLAY FOR ENTIRE DURATION
OF DETOUR

PCMS-1

US 113 SOUTH CLOSED	NO THRU TRUCKS	FOLLOW TRUCK DETOUR

SPECIAL SIGNS

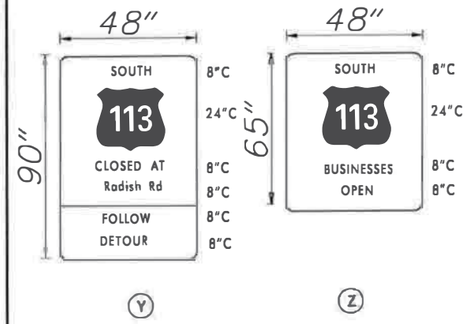

(Y) (Z)

NOTES:

SIGNS SHALL BE BLACK ON RETROREFLECTIVE FLUORESCENT PRISMATIC ORANGE.

ROUTE SHIELD SHALL BE 30" X 24" BLACK LEGEND ON WHITE BACKGROUND.

LEGEND

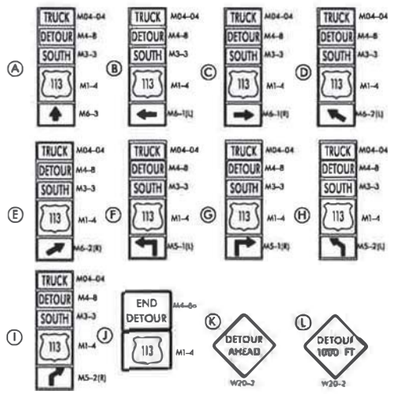

GENERAL NOTES

1. ALL DETOUR SIGNING, INCLUDING TRAILBLAZERS, ARE TO BE SUPPLIED AND MAINTAINED BY THE GENERAL CONTRACTOR IN COMPLIANCE WITH "THE DELAWARE MANUAL ON UNIFORM TRAFFIC CONTROL DEVICES" (DE MUTCD).
2. THE CONTRACTOR SHALL COMPLY WITH GUIDELINES IN "THE DELAWARE MANUAL ON UNIFORM TRAFFIC CONTROL DEVICES" (DE MUTCD PART 6) FOR BARRICADES AND SIGNS (AS PER LATEST REVISION.)
3. DESIGN OF ALL SIGNS SHALL BE IN ACCORDANCE WITH THE FHWA STANDARD HIGHWAY SIGNS BOOK.
4. SIZES OF ALL SIGNS SHALL BE IN ACCORDANCE WITH "THE DELAWARE MANUAL ON UNIFORM TRAFFIC CONTROL DEVICES" (DE MUTCD.) SIZE OF SIGN SHALL BE BASED ON TYPE OF ROADWAY ON WHICH THE SIGN IS INSTALLED.
5. THE COLORS, DIMENSIONS, AND CHARACTERISTICS OF ALL INTERSTATE, U.S. ROUTE, AND STATE ROUTE SHIELD SIGNS SHALL BE IN ACCORDANCE WITH SECTION 2D.11 OF "THE DELAWARE MANUAL ON UNIFORM TRAFFIC CONTROL DEVICES" (DE MUTCD.)
6. SIGNS NO LONGER IN USE SHALL BE COMPLETELY COVERED WITH NO RETROREFLECTIVE MATERIAL SHOWING, OR SHALL BE REMOVED, AS DIRECTED BY THE ENGINEER.
7. FIELD CONDITIONS MAY DICTATE CHANGES AT SOME TIME DURING THE LIFE OF THE CONTRACT. IN THE EVENT OF OMISSIONS OR CORRECTIONS, THE SIGNING PROVISIONS OF "THE DELAWARE MANUAL ON UNIFORM TRAFFIC CONTROL DEVICES" (DE MUTCD) WILL PREVAIL.
8. SIGNS "N" THROUGH "O" AND "T" AND "V", THE WORD "ROAD" SHOULD BE CHANGED TO "RAMP", "RR XING", OR "BRIDGE" WHERE APPLICABLE.
9. WARNING SIGNS AND DETOUR TRAILBLAZERS SHALL BE MOUNTED ON BREAKAWAY POSTS AND HAVE RETROREFLECTIVE FLUORESCENT ORANGE SHEETING.
10. "W" BARRICADES SHALL COMPLETELY RUN THE FULL WIDTH OF THE ROADWAY.
11. BARRICADES SHALL BE A MINIMUM OF 6 FEET WIDE UNLESS DIRECTED BY THE ENGINEER.

PREPARED BY
DELDOT – TRANSPORTATION SOLUTIONS
TRAFFIC SAFETY

MARK S. BUCKALEW LICENSE No. 16738 DELAWARE PROFESSIONAL ENGINEER

THIS SEAL APPLIES TO ALL SHEETS BEARING THE "TS" SECTION DESIGNATION.

11/1/18
DATE

SEAL

LAST REVISED: 9/11/2018
DATE:
BY:
FILES:

ADDENDA / REVISIONS

NOT TO SCALE

BR 3-507 ON US113
OVER IRON BRANCH

CONTRACT	ROAD NO.	US113/020	TRUCK DETOUR PLAN	SECTION
T201307301	DESIGNED BY: YFH			TS
COUNTY	CHECKED BY: MSB			SHEET NO.
SUSSEX				27

UTILITY TEST HOLE SCHEDULE

NO.	UTILITY	STATION	OFFSET	GRND EL.	COVER	O.D. & MATERIAL
1	ESNG	106+65.00	-43.00	17.78'	13.78'	6.625" STEEL
2	ESNG	111+71.00	-54.00	14.18'	14.49'	6.625" STEEL

NOTES:

1. ALL EXISTING UTILITY LOCATIONS SHOWN ARE FROM INFORMATION PROVIDED BY OTHERS. EXACT LOCATIONS AND DEPTHS SHALL BE CONFIRMED FOR ANY UTILITIES DETERMINED TO BE IN POTENTIAL CONFLICT WITH PROPOSED STRUCTURE AND ROAD WORK.

2. THE 6" ESNG LINE UNDER P-4 (36" DIA RCP) AND THE WINGWALL FOOTER IS CALCULATED TO BE BELOW THE ELEVATION OF THE BOTTOM OF THE FOOTER AND RELOCATION OF THE 6" ESNG LINE IS NOT PLANNED. THE CONTRACTOR SHALL CONTACT ESNG AND CONSULT WITH THEIR ENGINEER PRIOR TO INITIATING CONSTRUCTION WORK IN THIS AREA. REFER TO THE UTILITY STATEMENT FOR FURTHER DETAILS.

3. THE ITMS (EX-SIG) LINE LOCATED IN THE MEDIAN MAY BE SUSPENDED DURING CONSTRUCTION. THE CONTRACTOR SHALL CONTACT DELDOT AND CONSULT WITH THEIR ENGINEER PRIOR TO SUSPENDING THE LINE. ANY DAMAGE TO THE ITMS LINE WILL BE REPAIRED OR REPLACED BY THE CONTRACTOR AT THEIR EXPENSE TO THE SATISFACTION OF THE ENGINEER.

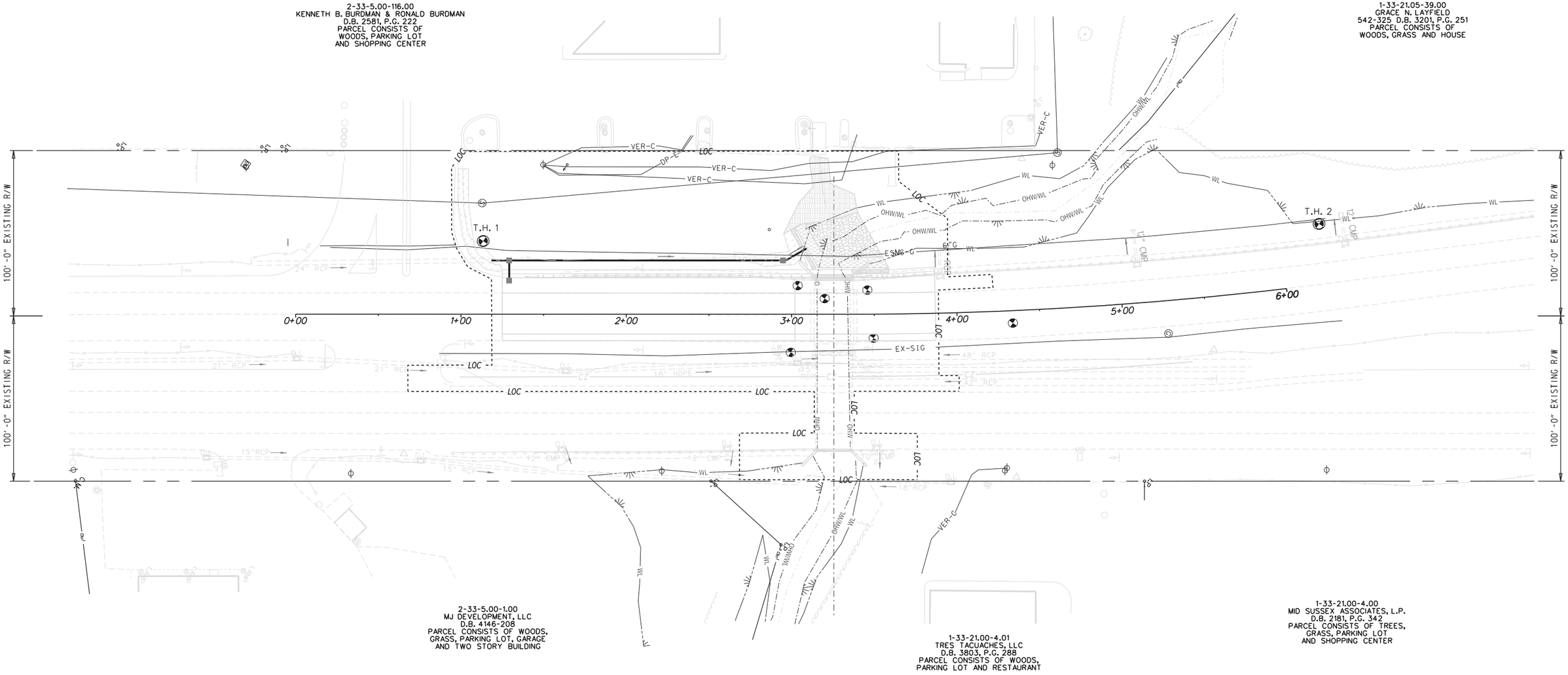

ADDENDA / REVISIONS	

SCALE
0 30 60 90
FEET

BR 3-507 ON US113 OVER IRON BRANCH

CONTRACT	BRIDGE NO. 3-507	UTILITY RELOCATION PLAN	SECTION
T201307301	DESIGNED BY: JWK		BR
COUNTY			SHEET NO.
SUSSEX	CHECKED BY: NED		28

18-MAR-2019
08:47:43
Y:\SUSSEX\113\Bridge\T201307301\Plans\cp.dgn

PERMANENT SIGN SCHEDULE

PLAN IDENTIFIER	SIGN DESIGNATION	QTY.	DESCRIPTION	SIGN WIDTH (IN)	SIGN HEIGHT (IN)	SIGN AREA (SF)	ITEM 819018 SINGLE POST (EACH)			ITEM 819019 INSTALLATION OR REMOVAL OF TRAFFIC SIGN(S) ON MULTIPLE SIGN POSTS (SF)			POST INSTALLATION TYPE	Code X11 12' Post (W/ Baseposts)	ITEM 819016 4" HOLE, 0-6' (EACH)	ITEM 819017 4" HOLE, >6' (EACH)	REMARKS
							SIGN DISPOSITION	REMOVE	INSTALL	SIGN DISPOSITION	REMOVE	INS"ALL					
1	R5-1(36)	1	DO NOT ENTER - 36x36	36"	36"	9.0	REPOSITION	1	1				SOIL	1			
1	R5-1(36)	1	DO NOT ENTER - 36x36	36"	36"	9.0	REPOSITION	1	1				SOIL	1			
2	R5-1a(42)	1	WRONG WAY - 42x30	42"	30"	8.75	REPOSITION	1	1				SOIL	1			
2	R5-1a(42)	1	WRONG WAY - 42x30	42"	30"	8.75	REPOSITION	1	1				SOIL	1			

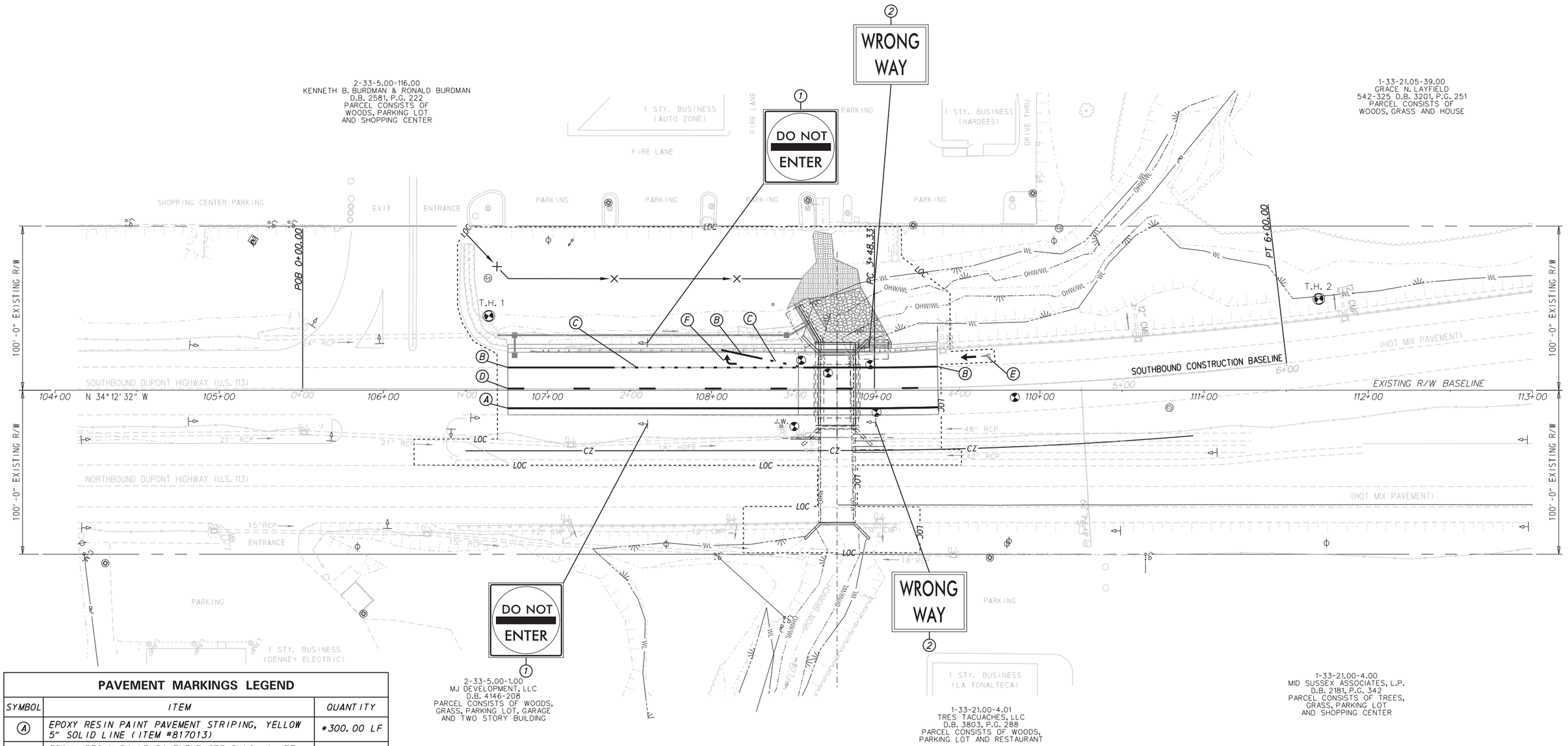

PAVEMENT MARKINGS LEGEND

SYMBOL	ITEM	QUANTITY
(A)	EPOXY RESIN PAINT PAVEMENT STRIPING, YELLOW 5" SOLID LINE (ITEM #817013)	*300.00 LF
(B)	EPOXY RESIN PAINT PAVEMENT STRIPING, WHITE 5" SOLID (ITEM #817013)	*200.00 LF
(C)	EPOXY RESIN PAINT PAVEMENT STRIPING, WHITE 5" DOTTED - 2' LINE & 6' GAP (ITEM #817013)	40.00 LF
(D)	EPOXY RESIN PAINT PAVEMENT STRIPING, WHITE 5" BROKEN - 10' LINE & 30' GAP (ITEM #817013)	*100.00 LF
(E)	PREFORMED RETROREFLECTIVE THERMOPLASTIC MARKINGS, BIKE SYMBOL (ITEM #817015)	1.0 EA
(F)	PERMANENT PAVEMENT STRIPING, SYMBOL/LEGEND, ALKYD-THERMOPLASTIC (ITEM #817002)	46.5 SF

*30 L.F. ADDITIONAL STRIPING QUANTITY INCLUDED TO REPAIR ANY DAMAGED STRIPING OUTSIDE LOC

ADDENDA / REVISIONS	

SCALE
0 30 60 90
FEET

BR 3-507 ON US113 OVER IRON BRANCH

CONTRACT	BRIDGE NO.	3-507
T201307301	DESIGNED BY: JWK	
COUNTY	CHECKED BY: NED	
SUSSEX		

SIGNING AND STRIPING PLAN

SECTION
BR
SHEET NO.
29

18-MAR-2019
08:44:42
Y:\SUSSEX 113\Bridge\T201307301\Plans\cp.dgn