THE STATE OF DELAWARE
DEPARTMENT OF TRANSPORTATION

U.S. CUSTOMARY UNITS

CONSTRUCTION AND RIGHT-OF-WAY PLANS FOR:

BR 1-065 ON PARKSIDE BOULEVARD OVER PERKINS RUN

CONTRACT NUMBER: T201707105

FEDERAL AID PROJECT NUMBER: N/A

COUNTY: NEW CASTLE **M.R. #:** 103230

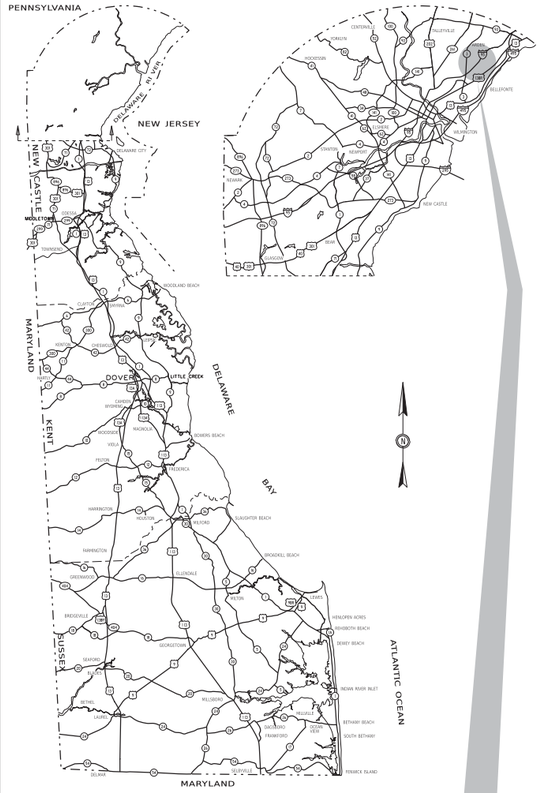

GENERAL LOCATION OF CONTRACT

DESIGN DESIGNATION

MRD #: 103230	ROAD NAME: PARKSIDE BOULEVARD	
FUNCTIONAL CLASS: LOCAL (URBAN)	D.H.V. PROJECTED: 90	YEAR: 2050
TYPE OF CONSTRUCTION: BRIDGE REPLACEMENT	DESIGN SPEED: 30 M.P.H.	
A.A.D.T. CURRENT: 500 YEAR: 2018	TRUCKS: 13 %	
A.A.D.T. PROJECTED: 590 YEAR: 2050	DIRECTION OF DISTRIBUTION: 61 %	

APPROVED DESIGN EXCEPTIONS

DESIGN PARAMETER	REQUIRED	PROVIDED	DATE
STOPPING SIGHT DISTANCE	200 FEET	169.67 FEET	10/01/2018
HORIZONTAL RADIUS	300 FEET	240 FEET	10/01/2018
MINIMUM K (SAG)	37	28.97	10/01/2018
SUPERELEVATION	6%	-4%	10/01/2018

ADDENDA / REVISIONS

ASSOCIATED CONTRACTS

CONTRACT NO.	CONTRACT NAME

APPROVED FOR ADVERTISEMENT

DIRECTOR OF TRANSPORTATION SOLUTIONS — DATE: 11/08/2019

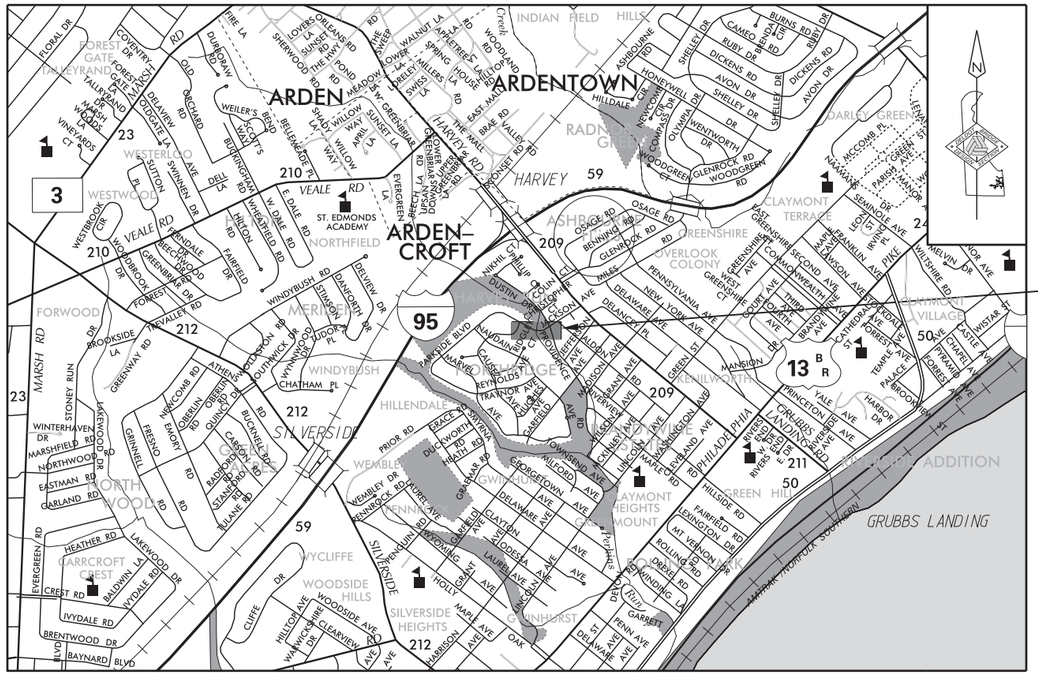

PREPARED BY

DELDOT - TRANSPORTATION SOLUTIONS
BRIDGE DESIGN

Scott M. Walls — DATE: 10/09/2019

THIS SEAL APPLIES TO ALL SHEETS BEARING THE "BR" SECTION DESIGNATION.

SCOTT M. WALLS — LICENSED — No. 20406 — DELAWARE — PROFESSIONAL ENGINEER

SEAL

DISCLAIMER:
THIS PLAN SET IS INTENDED TO BE A GUIDELINE FOR PREPARING A SET OF PLANS INVOLVING THE CONSTRUCTION OF A PRECAST CONCRETE ARCH. IT IS NOT INTENDED TO BE A SET OF STANDARDS. THE DESIGN ENGINEER IS STILL RESPONSIBLE FOR PERFORMING THE DESIGN AND NECESSARY DOCUMENTATION USING HIS/HER ENGINEERING JUDGEMENT AND EXPERTISE.

LAST REVISED: 10/08/2019
9-OCT-2019
08:39
Y:\NEWCASTL\103230\Bridge\T201707105\500_CADD\530_PLANS_DGN\T100.dgn

SECTION	SHEET DESCRIPTION	SHEET NO(S)
BR	TITLE	1
BR	INDEX OF SHEETS	2
BR	ADDENDA AND REVISIONS	3
BR	LEGEND	4
BR	NOTES	5
BR	TYPICAL SECTION	6
BR	HORIZONTAL AND VERTICAL CONTROL	7
BR	CONSTRUCTION PLAN	8
BR	PROFILE	9
BR	BRIDGE PLAN, SECTION AND ELEVATION	10
BR	CONSTRUCTION DETAILS	11
BR	BORING LOGS	12
BR	CONSTRUCTION PHASING AND EROSION CONTROL PLAN	13
BR	ENVIRONMENTAL COMPLIANCE NOTES	14
BR	ENVIRONMENTAL COMPLIANCE PLAN	15
TS	VEHICULAR DETOUR PLAN	16
BR	UTILITY RELOCATION PLAN	17
BR	RIGHT-OF-WAY PLAN	18
BR	RIGHT-OF-WAY DATA AND TABULATION SHEET	19

INTENTIONALLY LEFT BLANK

ADDENDA / REVISIONS		NOT TO SCALE	BR 1-065 ON PARKSIDE BOULEVARD OVER PERKINS RUN	CONTRACT T201707105	BRIDGE NO. 1-065	ADDENDA AND REVISIONS	SECTION BR
				COUNTY NEW CASTLE	DESIGNED BY: SWW		SHEET NO. 3
					CHECKED BY: SMW		

4-NOV-2019
13:47
Y:\NEWCASTL\1032301\Bridge\T201707105\500_CADD\530_PLANS_DGN\AR01.dgn

EXISTING SYMBOLS

DRAINAGE

	DITCH OR STREAM CENTERLINE
	DIRECTIONAL STREAM FLOW ARROW
C.B. / D.I.	DRAINAGE INLET
J.B.	DRAINAGE JUNCTION BOX
D	DRAINAGE MANHOLE
SIZE/TYPE LABEL	DRAINAGE PIPE AND FLOW ARROW
	DRAINAGE PIPE HEADWALL
	RIPRAP - AREA FEATURE
	RIPRAP - LINEAR FEATURE

MANMADE ROADSIDE FEATURES

	BOLLARD - STEEL POLE
	BOLLARD - WOOD POST
(TYPE LABEL)	CURB
(TYPE LABEL)	CURB AND GUTTER
	FENCE - CHAINLINK OR STRANDED
	FENCE - STOCKADE OR SPLIT RAIL
F.P.	FLAG POLE
	GUARDRAIL - STEEL BEAM
	GUARDRAIL - WIRE ROPE
LAMP	LAMP AND POST - RESIDENTIAL
MB	MAILBOX
P.M.	PARKING METER AND POST
	PAVEMENT - FLEXIBLE
	PAVEMENT - RIGID
	PILE - BRIDGE
	PILLAR OR MISCELLANEOUS POST
	TRAFFIC SIGN AND POST
	WALL - BRICK OR BLOCK
	WALL - STONE

NATURAL ROADSIDE FEATURES

	GRASS LAWN
	HEDGEROW OR THICKET
	MARSH BOUNDARY LINE
	TREE - CONIFEROUS
	TREE - DECIDUOUS
	TREE STUMP
	SHRUBBERY
WL	DELINEATED WETLAND BOUNDARY LINE
	WOODS LINE BOUNDARY

RIGHT-OF-WAY SYMBOLS

C.M.	PROPERTY MARKER - CONCRETE MON.
I.P.	PROPERTY MARKER - IRON PIPE
100+00	HISTORIC RIGHT-OF-WAY BASELINE
	EXISTING RIGHT-OF-WAY
	EXISTING PROPERTY LINE
EASEMENT TYPE	EXISTING EASEMENT
DA	EXISTING DENIAL OF ACCESS
R/W-DA	EXISTING R/W & DENIAL OF ACCESS

SURVEY CONTROL & MONUMENTATION

B.M.	SURVEY BENCHMARK LOCATION
T.P.	SURVEY TIE POINT LOCATION
	SURVEY TRAVERSE POINT
	POINT OF CURVATURE OR TANGENCY
	POINT OF INTERSECTING TANGENTS

UTILITY

	SOIL BORING LOCATION
	UTILITY TEST HOLE LOCATION
TV	CABLE TV DISTRIBUTION BOX
E	ELECTRIC MANHOLE
EM	ELECTRIC METER
E	ELECTRIC TRANSFORMER
	POLE MOUNTED LUMINAIRE
G	GAS MANHOLE
G.M.	GAS METER
G.V.	GAS VALVE
G.P.	GAS PUMP - SERVICE STATION
	RAILROAD TRACKS
S	SANITARY SEWER MANHOLE
S.V.	SANITARY SEWER VALVE
S.C.O.	SANITARY SEWER CLEANOUT OR VENT
S.D.F.	SEPTIC DRAIN FIELD
B	TELEPHONE BOOTH
T	TELEPHONE MANHOLE
T	TELEPHONE TEST POINT
J.W.	TRAFFIC - CONDUIT JUNCTION WELL
	TRAFFIC - LIGHT POLE AND BASE
	TRAFFIC - PEDESTRIAN POLE & BASE
	TRAFFIC - SIGNAL CABINET & BASE
	TRAFFIC - SIGNAL POLE AND BASE
U	UTILITY BOX
	UTILITY POLE GUY WIRE ANCHOR
	UTILITY POLE
F.H.	WATER - FIRE HYDRANT
W.M.	WATER METER
W.V.	WATER VALVE
WELL	WELL HEAD
?	MANHOLE - UNDETERMINED OWNER

UTILITY COMPANY FACILITIES

COM-C-OH	COMCAST CABLEVISION
DP-E-OH	DELMARVA POWER - ELECTRIC
DP-G (X)	DELMARVA POWER - GAS
NCC-S (X)	NEW CASTLE COUNTY - SEWER
SZ-W (X)	SUEZ WATER (A.K.A. UNITED WATER)
VER-C-OH	VERIZON DELAWARE

(X) REPRESENTS ASCE DEFINED SUE QUALITY LEVEL

PROPOSED SYMBOLS

CONSTRUCTION

	CONCRETE SAFETY BARRIER - PERMANENT
BFS	BIOFILTRATION SWALE
	BRICK PATTERNED SURFACE
	BUTT JOINT
CZ	CLEAR ZONE
100+00	CONSTRUCTION BASELINE
CSF	CONSTRUCTION SAFETY FENCE
	CURB, TYPE 1 & TYPE 3
	CURB, TYPE 2
	CURB & GUTTER, TYPE 1
	CURB & GUTTER, TYPE 2
	CURB & GUTTER, TYPE 3
	CURB & GUTTER, TYPE 4
	CURB OPENING - SUMP / ON GRADE
	CURB OPENING WITH SIDEWALK
	DRAINAGE INLET
	DITCH
	FENCE - METAL / FENCE - WOOD
	FLARED END / SAFETY END SECTION
	GUARDRAIL, TYPE 1
	GUARDRAIL, TYPE 2
	GUARDRAIL, TYPE 3
	GUARDRAIL END ANCHORAGE
	GUARDRAIL END TREATMENT, TYPE 1
	GUARDRAIL END TREATMENT, TYPE 2
	GUARDRAIL END TREATMENT, TYPE 3
	IMPACT ATTENUATOR
	JUNCTION BOX - DRAINAGE
LO	LATERAL OFFSET
LOC	LIMIT OF CONSTRUCTION
MB	MAILBOX
	MANHOLE
	PAVEMENT PATCH
	PAVEMENT REMOVAL - TOPSOIL, SEED AND MULCH
	PIPE & DIRECTIONAL FLOW ARROW
	RIPRAP
	P.C.C. SIDEWALK - 4"
	P.C.C. SIDEWALK - 6" (USE 8" DEPTH FOR CHANNELIZATION ISLANDS.)
	UNDERDRAIN
	UNDERDRAIN OUTLET

RIGHT-OF-WAY SYMBOLS

	PROPOSED RIGHT-OF-WAY MONUMENT
DA	PROPOSED DENIAL OF ACCESS
PE	PROPOSED PERMANENT EASEMENT
R/W	PROPOSED RIGHT-OF-WAY
R/W-DA	PROPOSED R/W & DENIAL OF ACCESS
RTE	RIGHT-TO-ENTER
TCE	TEMPORARY CONSTRUCTION EASEMENT
100+00	PROPOSED RIGHT-OF-WAY BASELINE

IDENTIFIERS

A C	ADJUST BY CONTRACTOR
A C	ADJUST BY OTHERS
B XXX	CONCRETE SAFETY BARRIER
C XXX	CURB OR CURB & GUTTER
CJB XXX	CONVERT TO JUNCTION BOX
CMH XXX	CONVERT TO DRAINAGE MANHOLE
C O	CURB OPENING - SUMP / ON GRADE
CO SW	CURB OPENING WITH SIDEWALK
PC XX	PEDESTRIAN CONNECTION / TYPE
PC-N XXX	PEDESTRIAN CONNECTION / TYPE WITHOUT SIDEWALK SURFACE DETECTABLE WARNING SYSTEM
CSF XXX	CONSTRUCTION SAFETY FENCE
DI XXX	DRAINAGE INLET
DND	DO NOT DISTURB
ED XXX	ENERGY DISSIPATOR
F XXX	FENCE
FES XXX	FLARED END SECTION
FF C	FILL WITH FLOWABLE FILL
FS	FILTRATION STRUCTURE
GR XXX	GUARDRAIL
JB XXX	JUNCTION BOX
MH XXX	MANHOLE
M XXX	MONUMENT - RIGHT-OF-WAY
P XXX	PIPE
RL C	RELOCATE BY CONTRACTOR
RL O	RELOCATE BY OTHERS
RL PO	RELOCATE BY PROPERTY OWNER
RM C	REMOVE BY CONTRACTOR
RM TC	REMOVE BY TRAFFIC CONTRACTOR
RM O	REMOVE BY OTHERS
SES XXX	SAFETY END SECTION
UD XXX	UNDERDRAIN / LENGTH
UDO XXX	UNDERDRAIN OUTLET PIPE

LANDSCAPING

LS XXX	LANDSCAPE PLANTINGS
	SHRUBBERY
	CONIFEROUS TREE
	DECIDUOUS TREE

TRAFFIC

ITMS-CON	ITMS CONDUIT
SIG-CON	SIGNAL CONDUIT
	CONDUIT JUNCTION WELL
	LUMINAIRE
	PAVEMENT MARKINGS
	PAVEMENT STRIPING
	TRAFFIC SIGN

PAVEMENT SECTION(S)

	1.5" DEPTH MILL, REPLACE WITH: 1.5" SUPERPAVE TYPE C, PG 64-22 (CARB STONE)
	1.5" SUPERPAVE TYPE C, PG 64-22 (CARB STONE) 2.5" SUPERPAVE TYPE B, PG 64-22 7.5" GABC, TYPE B
	2" SUPERPAVE TYPE C, PG 64-22 (CARB STONE) 8" GABC, TYPE B

UTILITY COMPANY FACILITIES

SZ-W	SUEZ WATER (A.K.A. UNITED WATER)

MISCELLANEOUS

	WOOD POST AND RAIL FENCE
DW	DRIVEWAY

EROSION & SEDIMENT CONTROL

CFL	COMPOST FILTER LOG
CFL	COMPOST FILTER LOG / LENGTH
DWBAG	DEWATERING BAG
DWB	DEWATERING BASIN
ED	EARTH DIKE
	INLET SEDIMENT CONTROL
	PERIMETER DIKE/SWALE
PST	PORTABLE SEDIMENT TANK
SBD	SANDBAG DIKE
SB	SANDBAG DIVERSION
	STONE CHECK DAM
SCE	STABILIZED CONSTRUCTION ENTRANCE
SF	SILT FENCE / LENGTH
SF	SILT FENCE
RSF	REINFORCED SILT FENCE / LENGTH
RSF	REINFORCED SILT FENCE
SSF	SUPER SILT FENCE / LENGTH
SSF	SUPER SILT FENCE
SP	SUMP PIT
ST	SEDIMENT TRAP / NUMBER
ST	SEDIMENT TRAP
ST	SEDIMENT TRAP WITH INLET AS OUTLET
ST	SEDIMENT TRAP PIPE OUTLET
SW	STILLING WELL
	TEMPORARY SWALE
TSD	TEMPORARY SLOPE DRAIN
T XXX	TURBIDITY CURTAIN / LENGTH
T	TURBIDITY CURTAIN

ADDENDA / REVISIONS		NOT TO SCALE	BR 1-065 ON PARKSIDE BOULEVARD OVER PERKINS RUN	CONTRACT T201707105	BRIDGE NO. 1-065	LEGEND	SECTION BR
				COUNTY NEW CASTLE	DESIGNED BY: SWW		SHEET NO. 4
					CHECKED BY: SMW		

4-NOV-2019
13:47
Y:\NEWCASTL\103230\Bridge\T201707105\500_CADD\530_PLANS_DGN\LG.dgn

GENERAL NOTES

1. THIS PROJECT IS TO BE CONSTRUCTED IN ACCORDANCE WITH THE DELAWARE DEPARTMENT OF TRANSPORTATION "STANDARD SPECIFICATIONS", DATED AUGUST 2016 AND THE DELAWARE DEPARTMENT OF TRANSPORTATION "STANDARD CONSTRUCTION DETAILS", DATED 2018, INCLUDING ALL REVISIONS UP TO THE DATE OF ADVERTISEMENT.

2. ELECTRONIC PROJECT FILES THAT WILL BE MADE AVAILABLE TO THE AWARDED CONTRACTOR, INCLUDE:

( )	NONE
( )	ASCII DATA FILES WITH COORDINATES AND ELEVATIONS FOR PROPOSED POINTS AS SELECTED BY THE ENGINEER.
(X)	ALL PLAN SHEETS, IN PDF FORMAT.
( )	EXISTING DIGITAL TERRAIN MODEL, IN .DTM FILE FORMAT, COMPATIBLE WITH SOFTWARE CURRENTLY USED BY DELDOT.
( )	PROPOSED DIGITAL TERRAIN MODEL, IN .DTM FILE FORMAT, COMPATIBLE WITH SOFTWARE CURRENTLY USED BY DELDOT.
( )	DESIGN FILE, IN .DGN FILE FORMAT, CONTAINING ONLY THE PROPOSED 3D TRIANGLES OF THE PROPOSED DIGITAL TERRAIN MODEL (DTM).

NOTE: THE DOCUMENT ENTITLED "RELEASE FOR DELIVERY OF DOCUMENTS IN ELECTRONIC FORM TO A CONTRACTOR" MUST BE SIGNED BY ALL PARTIES PRIOR TO THE DELIVERY OF ANY ELECTRONIC PROJECT FILES.

3. PROJECT FILES THAT WILL BE MADE AVAILABLE TO THE CONTRACTOR, INCLUDE:

(X)	CROSS SECTIONS (WILL BE MADE AVAILABLE TO THE AWARDED CONTRACTOR)
(X)	RIGHT-OF-WAY PLANS (INCLUDED IN PLAN SET)

PROJECT NOTES

SECTION 100

1. ANY DAMAGE TO ITEMS NOTED TO BE RELOCATED OR RESET BY THE CONTRACTOR, AT THE DISCRETION OF THE ENGINEER, SHALL BE REPAIRED AND/OR REPLACED IN KIND AT THE CONTRACTOR'S EXPENSE.

2. THE CONTRACTOR WILL CONTACT THE DELAWARE TMC AT 302-659-4600 PRIOR TO ANY UNMANNED AIRCRAFT VEHICLE (UAV) FLIGHTS. THE CONTRACTOR WILL BE REQUIRED TO PROVIDE THE FOLLOWING INFORMATION: THE REGISTRATION NUMBER OF THE UAV, THE FLIGHT TIME, LOCATION OF THE FLIGHT, THE PILOT'S NAME AND THE PILOT'S CONTACT NUMBER DURING THE FLIGHT.

SECTION 200

3. ITEMS TO BE REMOVED UNDER ITEM #211000 - REMOVAL OF STRUCTURES AND OBSTRUCTIONS SHALL INCLUDE, BUT NOT BE LIMITED TO THE FOLLOWING:
   - TWO (2) EXISTING CORRUGATED METAL PIPE ARCHES - 8'-7" X 5'-11" EACH
   - EXISTING GUARDRAIL
   - TWO (2) DRAINAGE PIPES AT STA. LT. 12+34 AND STA. RT. 12+36 (15" RCP)
   - EXISTING DRAINAGE INLETS AND ASSOCIATED JUNCTION BOXES AT STA. LT. 12+34 AND STA. RT. 12+36
   - EXISTING RIPRAP SIDE SLOPES ALONG WITH CONCRETE DRAINAGE DEBRIS FROM EXISTING DRAINAGE SWALES
   - 4" PLASTIC GAS LINE BETWEEN CAPS. SEE UTILITY RELOCATION PLAN FOR FURTHER GUIDANCE.
   - 6" CAST IRON WATER LINE BETWEEN CAPS. SEE UTILITY RELOCATION PLAN FOR FURTHER GUIDANCE.
   - 8" DUCTILE IRON WATER LINE BETWEEN CAPS. SEE UTILITY RELOCATION PLAN FOR FURTHER GUIDANCE.

4. REMOVAL OF TREES GREATER THEN 6 INCHES IN DIAMETER INCIDENTAL TO ITEM #201000 - CLEARING AND GRUBBING.

5. ROCK PROFILE VARIATION:
   IT IS ANTICIPATED THAT THE ACTUAL PROFILE OF THE ROCK VARIES FROM WHAT HAS BEEN MEASURED, THE ESTIMATED QUANTITIES FOR THE ITEMS LISTED BELOW HAVE BEEN INCREASED 25% OVER THE QUANTITIES CALCULATED:
   - ITEM #207000 - STRUCTURAL EXCAVATION
   - ITEM #207010 - ROCK EXCAVATION FOR STRUCTURES
   - ITEM #302005 - DELAWARE #57 STONE
   - ITEM #607010 - MODULAR BLOCK RETAINING WALLS
   - ITEM #610000 - P.C.C. MASONRY, CLASS A
   - ITEM #610015 - P.C.C. MASONRY, CLASS C
   - ITEM #708003 - GEOTEXTILES, RIPRAP

   NOTE THAT THE INCREASE MADE WAS ONLY TO ESTIMATE THE ANTICIPATED QUANTITIES. THE CONTRACTOR WILL BE PAID PER THE UNIT BID PRICE FOR EACH RESPECTIVE ITEM FOR THE QUANTITY OF MATERIAL ACTUALLY REMOVED/INSTALLED.

SECTION 600

6. STATION AND ELEVATION DATA GIVEN FOR DRAINAGE STRUCTURES ARE TO BE APPLIED TO THE CENTER OF THE GRATE FOR INLETS AND TO THE CENTER OF THE STRUCTURE FOR JUNCTION BOXES AND MANHOLES.

7. PORTLAND CEMENT CONCRETE:
   USE PORTLAND CEMENT CONCRETE FOR CAST-IN-PLACE ELEMENTS AS FOLLOWS:
   (f'c = 28-DAY COMPRESSIVE STRENGTH)
   - FOOTER FOR PRECAST ARCH (f'c = 5.0 ksi MIN.)
   - LEVELING PAD FOR FOOTER FOR PRECAST ARCH (f'c = 2.0 ksi MIN.)
   - LEVELING PAD/FOUNDATION FOR MODULAR BLOCK RETAINING WALL (f'c = 2.0 ksi MIN.)

   - CHAMFER ALL EXPOSED EDGES ¾" X ¾" UNLESS OTHERWISE NOTED.

   USE PORTLAND CEMENT CONCRETE FOR PRECAST ELEMENTS AS FOLLOWS:
   (f'c = 28-DAY COMPRESSIVE STRENGTH)
   - PRECAST CONCRETE ARCH (f'c = 5 ksi)

   - CHAMFER ALL EXPOSED EDGES ¾" X ¾" UNLESS OTHERWISE NOTED

8. BAR REINFORCEMENT:
   - REINFORCING STEEL SHALL CONFORM TO AASHTO M31 (ASTM A615), GRADE 60.
   - REINFORCING STEEL SHALL HAVE A 3" CLEAR COVER IF CAST AGAINST EARTH OR A 2" CLEAR COVER ELSEWHERE, UNLESS OTHERWISE SPECIFIED ON THE PLANS.
   - ALL REINFORCING STEEL SHALL BE PROTECTED WITH FUSION BONDED EPOXY. EPOXY COATED REINFORCING STEEL SHALL CONFORM TO ASTM A775.
   - ANY FIELD CUTTING OR FIELD BENDING MUST BE APPROVED BY THE ENGINEER. PAYMENT SHALL BE INCIDENTAL TO THE BAR REINFORCEMENT ITEM.
   - GALVANIZED REINFORCING STEEL MAY BE SUBSTITUTED FOR EPOXY-COATED REINFORCING STEEL AT NO ADDITIONAL COST TO DELDOT WITH APPROVAL OF THE BRIDGE DESIGN ENGINEER.
   - WELDING OF REINFORCEMENT DURING FABRICATION OR CONSTRUCTION IS NOT PERMITTED UNLESS SPECIFIED.

9. REINFORCEMENT FOR THE CAST-IN-PLACE FOOTER FOR THE PRECAST CONCRETE ARCH INCIDENTAL TO ITEM #610000 - P.C.C. MASONRY, CLASS A. LEVELING PAD FOR PRECAST CONCRETE ARCH FOOTER PAID UNDER TO ITEM #610015 - P.C.C. MASONRY, CLASS C.

SECTION 700

10. SAW CUTTING:

    PAVEMENT:
    ALL PAVED AREAS TO BE RECONSTRUCTED OR WIDENED SHALL BE SAW CUT AT THE POINT WHERE THE NEW PAVEMENT IS TO TIE INTO THE EXISTING PAVEMENT. ALL HOT-MIX SAW CUTTING SHALL BE FULL DEPTH, UNLESS OTHERWISE NOTED ON THE PLANS, OR AS DIRECTED BY THE ENGINEER. PAID UNDER ITEM #762000 - SAW CUTTING, BITUMINOUS CONCRETE.

    SIDEWALK, CURB AND GUTTER, CONCRETE PAVEMENT:
    ALL AREAS TO BE RECONSTRUCTED SHALL BE SAW CUT AT THE POINT WHERE THE NEW SIDEWALK, CURB AND GUTTER, OR CONCRETE PAVEMENT IS TO TIE INTO THE EXISTING SIDEWALK, CURB AND GUTTER, OR CONCRETE PAVEMENT. ALL P.C.C. SAW CUTTING SHALL BE FULL DEPTH, UNLESS OTHERWISE NOTED ON THE PLANS, OR AS DIRECTED BY THE ENGINEER. PAID UNDER ITEM #762001 - SAW CUTTING, CONCRETE, FULL DEPTH.

    EXISTING 4 FOOT WIDE SIDEWALK IS TO BE SAW CUT AT LOCATION INDICATED ON PLANS, OR MEET THE NEAREST EXISTING SIDEWALK JOINT, AND TRANSITIONED TO PROPOSED 5 FOOT WIDE SIDEWALK IN A DISTANCE OF 5 FEET.

11. THE NEW CASTLE COUNTY DEPARTMENT OF PUBLIC WORKS SHALL SUPPLY AND THE STATE'S CONTRACTOR SHALL INSTALL, NEW SELF SEALING MANHOLE FRAMES AND COVERS ON ALL COUNTY SEWER MANHOLES THAT ARE NOT BEING RELOCATED, WITHIN THE PROJECT LIMITS IN ACCORDANCE WITH THE COUNTY'S STANDARD SPECIFICATIONS. THE EXISTING MANHOLE FRAMES AND COVERS THAT ARE REMOVED SHALL BECOME THE PROPERTY OF THE STATE'S CONTRACTOR. PAYMENT SHALL BE PAID UNDER ITEM #711500 - ADJUST AND REPAIR EXISTING SANITARY SEWER MANHOLE.

12. THE CONTRACTOR SHALL DELIVER ALL EXCESS MILLED MATERIAL TO THE DELAWARE DEPARTMENT OF TRANSPORTATION'S TALLEY MAINTENANCE YARD. THE MATERIAL SHALL BE NEATLY STOCKPILED AT THE YARD. COSTS FOR THIS WORK SHALL BE INCIDENTAL TO THE MILLING ITEM UTILIZED FOR PAYMENT ON THE CONTRACT - ITEM #760010 - PAVEMENT MILLING, BITUMINOUS PAVEMENT.

13. EXISTING ROCKS THAT MEET MINIMUM REQUIREMENTS FOR PROPOSED RIPRAP MAY BE LEFT AS DETERMINED BY THE ENGINEER. EXISTING ROCK TO REMAIN WILL NOT CONFLICT WITH PROPOSED SUBFOUNDATIONS, FOUNDATIONS, OR STREAM RESTORATION.

SECTION 800

14. MAINTENANCE OF TRAFFIC:
    MAINTENANCE OF TRAFFIC SHALL BE AS PER DETOUR PLAN. THE DETOUR SHALL REMAIN IN EFFECT UNTIL THE FINAL BITUMINOUS CONCRETE PAVEMENT IS PLACED. ALL MOT ITEMS WITH THE EXCEPTION OF ITEM #803001 - FURNISH AND MAINTAIN PORTABLE CHANGEABLE MESSAGE SIGNS, ITEM #811001 - FLAGGERS, NEW CASTLE COUNTY STATE, AND ITEM #811013 - FLAGGER, NEW CASTLE COUNTY, STATE, OVERTIME WILL BE INCLUDED IN ITEM #801500 - MAINTENANCE OF TRAFFIC, ALL INCLUSIVE.

SECTION 900

15. THIS PROJECT IS COVERED UNDER AN NPDES GENERAL PERMIT FOR CONSTRUCTION. UNDER THE GENERAL PERMIT, COMPLIANCE WITH DELDOT'S APPROVED SEDIMENT AND STORMWATER MANAGEMENT PLANS WILL CONSTITUTE COMPLIANCE WITH THE NPDES INDUSTRIAL PERMITTING REQUIREMENTS FOR THIS CONSTRUCTION PROJECT. A COPY OF THE NPDES GENERAL PERMIT AND NOI IS KEPT ON FILE IN EACH OF THE CONSTRUCTION OFFICES AND THE DEPARTMENT'S STORMWATER SECTION. A COPY OF THE GENERAL PERMIT OR THE NOI CAN BE OBTAINED UPON REQUEST FROM EITHER THE DEPARTMENT'S STORMWATER ENGINEER OR THE APPROPRIATE CONSTRUCTION ENGINEER.

MISCELLANEOUS

16. DESIGN SPECIFICATIONS:
    - DELDOT BRIDGE DESIGN MANUAL, 2017 EDITION
    - AASHTO LRFD BRIDGE SPECIFICATIONS, 2014, 7TH EDITION, CUSTOMARY U.S. UNITS INCLUDING 2015 AND 2016 INTERIMS.

17. CONTRACTOR WILL MAINTAIN ACCESS TO ALL DRIVEWAYS THROUGHOUT THE DURATION OF THE PROJECT. DURING THE MILL AND OVERLAY OPERATIONS OF THE APPROACH ROADWAYS THE CONTRACTOR WILL NOTIFY THE PROPERTY OWNERS OF THE WORK AND ASSOCIATED TEMPORARY LIMITED ACCESS AT LEAST A WEEK PRIOR TO BEGINNING WORK. PEDESTRIAN ACCESS TO PROPERTIES WILL BE MAINTAINED UNIMPEDED THROUGHOUT THE DURATION OF THE PROJECT.

18. ANY DAMAGE TO THE ROADWAY SURFACE, CURBS, AND/OR DRAINAGE FEATURES AS A RESULT OF CONTRACTOR ACTIVITIES WILL BE REPAIRED AT THE EXPENSE OF THE CONTRACTOR.

19. HYDRAULIC DATA:

DRAINAGE AREA:	0.78 sq. mi.	DESIGN FREQ.:	25 YEARS
DESIGN DISCHARGE:	827 cfs	100-YEAR DISCHARGE:	1275 cfs
EXISTING 25-YEAR WSE:	112.26 ft	PROPOSED 25-YEAR WSE:	111.10 ft
EXISTING 25-YEAR VELOCITY:	7.27 fps	PROPOSED 25-YEAR VELOCITY:	5.13 fps
EXISTING 100-YEAR WSE:	115.12 ft	PROPOSED 100-YEAR WSE:	112.54 ft
EXISTING 100-YEAR VELOCITY:	10.47 fps	PROPOSED 100-YEAR VELOCITY:	6.66 fps
EXISTING WATERWAY OPENING:	78 sq. ft	PROPOSED WATERWAY OPENING:	218 sq. ft

20. SCOUR ANALYSIS:

SCOUR DESIGN FREQUENCY:	100 YEARS
SCOUR DESIGN FLOOD DISCHARGE:	1275 cfs
SCOUR DESIGN FLOOD VELOCITY:	6.66 fps
WATER SURFACE ELEVATION:	112.54 ft

    SCOUR COUNTERMEASURES HAVE BEEN DESIGNED FOR THE SCOUR DESIGN FLOOD IN ACCORDANCE WITH HEC 14 HYDRAULIC DESIGN OF ENERGY DISSIPATORS FOR CULVERTS AND CHANNELS.

21. LOAD RATING SUMMARY TO BE COMPLETED BY BRIDGE FABRICATOR IN COMPLIANCE WITH SECTION 108 OF THE DELDOT BRIDGE DESIGN MANUAL. SUBMIT LOAD RATING SUMMARY WITH SHOP DRAWINGS FOR APPROVAL BY THE ENGINEER. PAYMENY FOR LOAD RATING WILL BE INCLUDED UNDER ITEM #612002 - PRECAST CONCRETE ARCH.

22. THE CONTRACTOR SHALL NOTIFY DART FIRST STATE AT DOT_DETOURS@DELAWARE.GOV AT LEAST 14 DAYS PRIOR TO THE START OF ANY DETOURS OR CONSTRUCTION, AND DOT_DTC_PROJECTDEVELOPMENT@DELAWARE.GOV AT SUCH TIME THE FACILITY IS COMPLETED AND OPERABLE FOR TRANSIT OPERATIONS. FOR EMERGENCY DETOUR INFORMATION ONLY, PLEASE CONTACT DTC'S CHIEF SCHEDULER AT 302-576-6019.

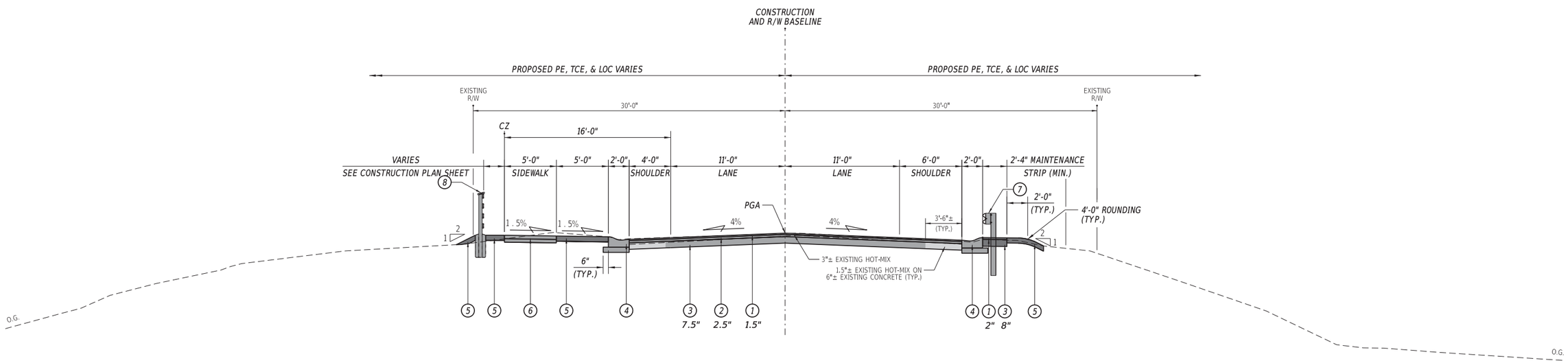

PARKSIDE BOULEVARD

STATION 11+00 TO STATION 15+00

LEGEND

1. ITEM #401005 - SUPERPAVE TYPE C, PG 64-22 (CARBONATE STONE)
2. ITEM #401014 - SUPERPAVE TYPE B, PG 64-22
3. ITEM #301001 - GRADED AGGREGATE BASE COURSE, TYPE B
4. ITEM #701019 - I.P.C.C. CURB AND GUTTER TYPE 2 AND
   6" GRADED AGGREGATE BASE COURSE, TYPE B
5. ITEM #908004 - TOPSOIL, 6" DEPTH AND
   ITEM #908019 - PERMANENT GRASS SEEDING, STREAMBANK AND
   ITEM #908020 - EROSION CONTROL BLANKET MULCH
6. ITEM #705001 - P.C.C. SIDEWALK, 4" AND
   4" GRADED AGGREGATE BASE COURSE, TYPE B
7. ITEM #720021 - GALVANIZED STEEL BEAM GUARDRAIL, TYPE 1-31
8. ITEM #727002 - WOOD POST AND RAIL FENCE

MATERIAL	LIFT THICKNESS	
	MINIMUM	MAXIMUM
SUPERPAVE TYPE C	1.25"	2"
SUPERPAVE TYPE B	2.25"	4"
SUPERPAVE TYPE BCBC	3"	6"
GRADED AGGREGATE BASE COURSE	4"	8"

ADDENDA / REVISIONS

SCALE
0 5 10 15
FEET

BR 1-065 ON PARKSIDE BOULEVARD OVER PERKINS RUN

CONTRACT	BRIDGE NO.	1-065	TYPICAL SECTION	SECTION
T201707105	DESIGNED BY: SWW			BR
COUNTY				SHEET NO.
NEW CASTLE	CHECKED BY: SMW			6

4-NOV-2019
13:48
Y:\NEWCASTL\103230\Bridge\T201707105\500_CADD\530_PLANS_DGN\TS.dgn

HORIZONTAL / VERTICAL CONTROL DATA

POINT NO.	STATION	OFFSET	NORTHING	EASTING	ELEV.
TP #1	12+10.47	-358.33	655398.07	638816.49	126.61
TP #2	15+66.08	-24.28	655115.69	638960.46	121.52
TP #3	14+32.14	-18.02	655053.07	638852.27	119.39
TP #4	13+28.76	-18.19	655053.17	638757.42	120.49
TP #5	11+77.92	16.05	655084.38	638609.55	128.74
TP #6	13+13.67	24.79	655015.22	638732.13	120.75
TP #7	-	-	655096.77	639016.17	122.47
TP #100	12+20.47	-84.95	655152.93	638695.07	110.34
TP #101	12+58.49	-171.77	655211.16	638769.86	116.00
TP #102	14+24.15	-126.95	655158.73	638825.22	116.86
TP #103	11+96.80	-218.31	655281.46	638737.78	118.13
TP #200	12+81.55	52.26	655002.01	638687.82	110.69
TP #201	13+35.71	117.55	654918.49	638738.66	110.95
TP #202	13+89.25	216.38	654813.82	638821.74	105.34
TP #203	14+99.84	203.49	654880.31	639016.58	115.15

CONSTRUCTION ALIGNMENT CONTROL

POINT NO.	STATION	OFFSET	NORTHING	EASTING
10000	10+00.00	0.00	655183.24	638460.76
10004	15+85.00	0.00	655106.69	638989.90

DATUM REFERENCE:

HORIZONTAL - THIS PROJECT IS REFERENCED TO THE DELAWARE STATE PLANE COORDINATE SYSTEM, NORTH AMERICAN DATUM OF 1983 (NAD 83).

VERTICAL - THIS PROJECT IS REFERENCED TO THE NORTH AMERICAN VERTICAL DATUM OF 1988 (NAVD 88).

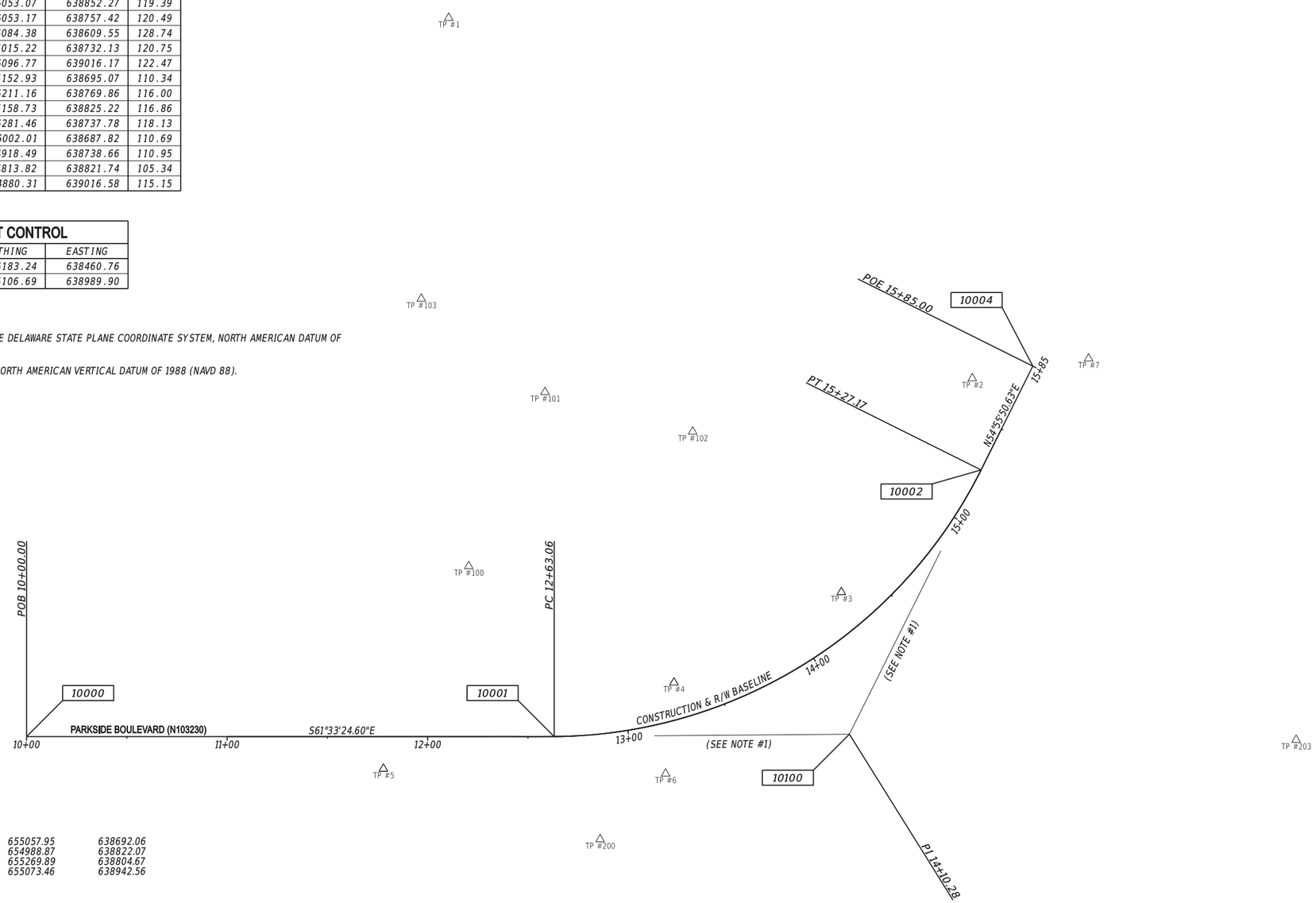

Element: Circular Curve #1			
PC (10001)	12+63.06	655057.95	638692.06
PI (10100)	14+10.28	654988.87	638822.07
CC (10003)		655269.89	638804.67
PT (10002)	15+27.17	655073.46	638942.56
Radius:	240.00		
Delta:	63°03'2.31" Left		
Degree of Curvature (Arc):	23°52'23.67"		
Length:	264.11		
Tangent:	147.22		
Chord:	250.98		
Middle Ordinate:	35.42		
External:	41.55		
Tangent Direction:	S 62°01'5.25" E		
Radial Direction:	S 27°58'54.75" W		
Chord Direction:	N 86°27'23.60" E		
Radial Direction:	S 35°04'07.56" E		
Tangent Direction:	N 54°55'52.44" E		

NOTE:

1. *CURVE #1 IS NOT TANGENT TO THE STRAIGHT ELEMENTS OF THE ROADWAY HAVING THE BEARINGS S61°33'24.60"E AND N54°55'50.63"E.*

ADDENDA / REVISIONS	

SCALE 0 30 60 90 FEET

BR 1-065 ON PARKSIDE BOULEVARD OVER PERKINS RUN

CONTRACT	BRIDGE NO.	1-065
T201707105	DESIGNED BY:	SWW
COUNTY		
NEW CASTLE	CHECKED BY:	SMW

HORIZONTAL AND VERTICAL CONTROL

SECTION
BR
SHEET NO.
7

4-NOV-2019
13:48
Y:\NEWCASTL\103230\Bridge\T201707105\500_CADD\530_PLANS_DGN\CP.dgn

UTILITY TEST HOLE SCHEDULE

NO.	UTILITY	STATION	OFFSET	GROUND EL.	COVER	O.D. & MATERIAL
TH-1	GAS	12+70.42	13.84	120.06	2.52	4" PLASTIC
TH-2	GAS	12+25.27	14.23	122.14	3.14	4" PLASTIC
TH-3	WATER	12+25.36	-20.09	121.58	3.38	6" CAST IRON
TH-4	WATER	12+24.88	-21.15	123.07	2.26	8" DUCTILE IRON
TH-5	WATER	12+63.28	-22.07	120.23	2.72	8" DUCTILE IRON
TH-6	WATER	12+63.31	-19.66	119.80	3.25	6" CAST IRON

SOIL BORING SCHEDULE

POINT	STATION	OFFSET	NORTHING	EASTING	ELEVATION
PB-1	12+69.57	12.26	655043.99	638692.40	122.53
PB-2	12+10.00	12.59	655072.15	638639.41	126.37
PB-3A	13+22.19	-12.22	655048.75	638750.08	120.62
PB-4	12+27.00	-12.01	655085.68	638666.07	125.01
PB-5	12+18.71	24.39	655057.62	638641.45	125.37
PB-6	12+86.78	29.87	655020.24	638702.18	120.48
PB-7	12+10.62	-28.30	655107.80	638659.44	125.45
PB-8	12+99.77	-31.12	655072.65	638735.91	120.99

DRAINAGE PIPE SCHEDULE

NO.	SIZE / TYPE	CLASS	LENGTH	SLOPE	INVERT EL.	DIS. EL.
1	15" RCP	III	8.00 (+)	2.0%	109.00	+
2	15" RCP	III	8.00 (+)	2.0%	109.00	+

DRAINAGE INLET SCHEDULE

NO.	STATION	OFFSET	BOX SIZE	GRATE	T.G. EL.	INV. EL.
1	12+32.08	++	34" x 24"	I	+++	109.00
2	12+32.08	++	34" x 24"	I	+++	109.00

\+ SEE CONSTRUCTION DETAILS FOR FURTHER INFORMATION
++ MATCH PROPOSED CURBLINE.
+++ MATCH FLOWLINE OF PROPOSED CURB AND GUTTER.
(REFER TO STANDARD DETAIL D-5 (2010) TYPE D)

FENCE SCHEDULE

NO.	QTY.	DESCRIPTION	NOTES
1	8 LF	WOOD FENCE, 4 FT. HIGH	STA. 11+91, 31' LT. TO STA. 11+99, 29' LT. (+/-)
2	132 LF	WOOD FENCE, 4 FT. HIGH	STA. 11+99, 29' LT. TO STA. 13+40, 29' LT. (+/-)
3	8 LF	WOOD FENCE, 4 FT. HIGH	STA. 13+40, 29' LT. TO STA. 13+50, 31' LT. (+/-)

CURB SCHEDULE

NO.	ITEM DESCRIPTION / TYPE	LENGTH
1	I.P.C.C. CURB AND GUTTER, TYPE 2	144.47
2	I.P.C.C. CURB AND GUTTER, TYPE 2	156.20

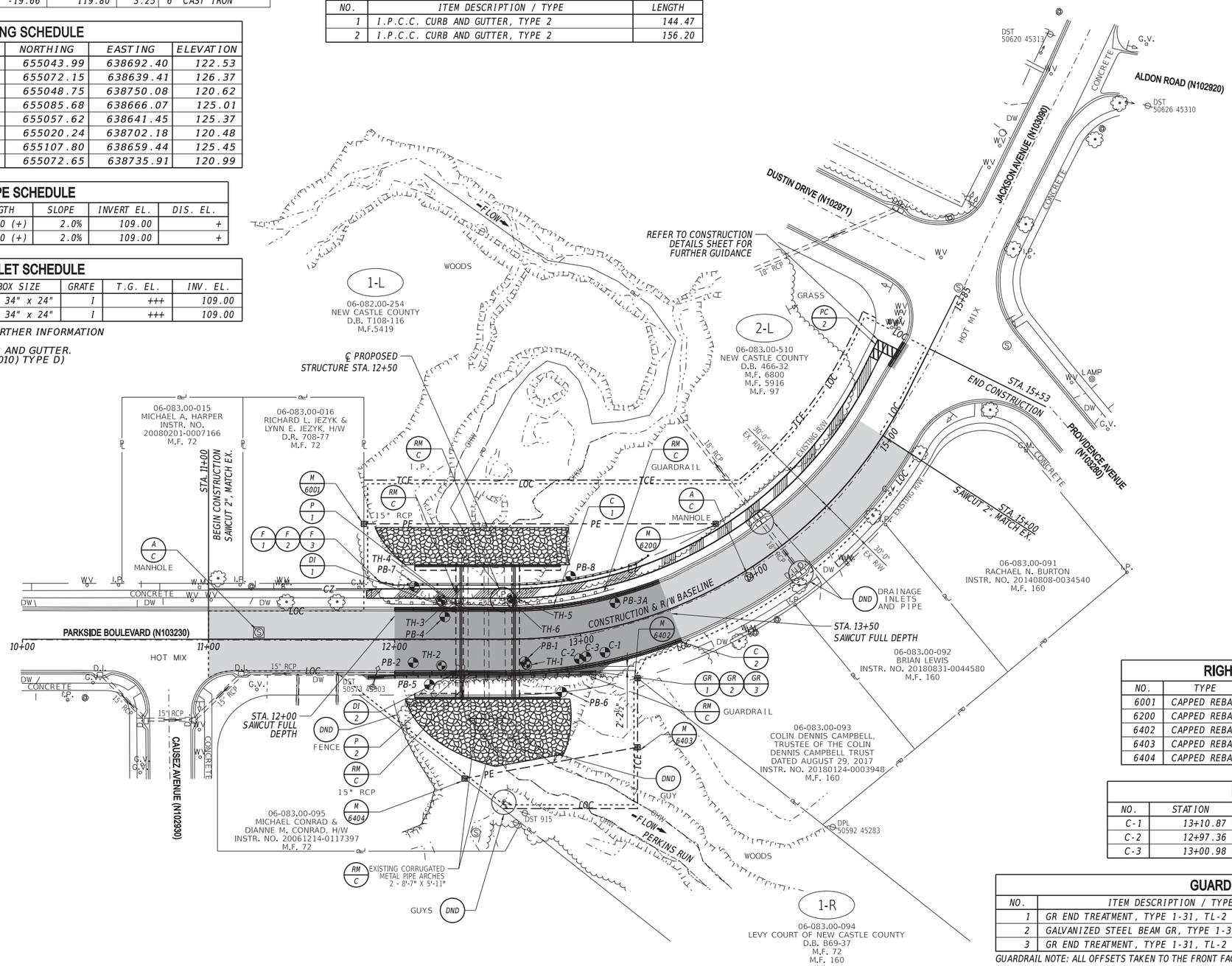

RIGHT-OF-WAY MONUMENT SCHEDULE

NO.	TYPE	STATION	OFFSET	NORTHING	EASTING
6001	CAPPED REBAR	11+83.49	-62.00	655150.3609	638651.6249
6200	CAPPED REBAR	13+95.38	-30.00	655060.3051	638817.8801
6402	CAPPED REBAR	13+23.59	30.00	655007.3853	638741.4888
6403	CAPPED REBAR	13+16.09	66.06	654974.7084	638723.7886
6404	CAPPED REBAR	12+37.63	74.88	655004.2149	638634.0383

ROADWAY CORE SCHEDULE

NO.	STATION	OFFSET	DESCRIPTION
C-1	13+10.87	12.46	3.25" HMA
C-2	12+97.36	13.42	1.5" HMA, 6.25" PCC
C-3	13+00.98	12.88	2.75" HMA

GUARDRAIL SCHEDULE

NO.	ITEM DESCRIPTION / TYPE	BEGIN STA.	OFFSET	LENGTH
1	GR END TREATMENT, TYPE 1-31, TL-2	11+85.62	19.91	25.00
2	GALVANIZED STEEL BEAM GR, TYPE 1-31	12+15.74	19.00	62.50
3	GR END TREATMENT, TYPE 1-31, TL-2	12+76.97	19.00	25.00

GUARDRAIL NOTE: ALL OFFSETS TAKEN TO THE FRONT FACE OF GUARDRAIL.

ADDENDA / REVISIONS

SCALE 0 30 60 90 FEET

BR 1-065 ON PARKSIDE BOULEVARD OVER PERKINS RUN

CONTRACT	BRIDGE NO.	1-065
T201707105	DESIGNED BY:	SWW
COUNTY	CHECKED BY:	SMW
NEW CASTLE		

CONSTRUCTION PLAN

CP-01
SECTION BR
SHEET NO. 8

4-NOV-2019
13:48
Y:\NEWCASTL\L103230\Bridge\T201707105\500_CADD\530_PLANS_DGN\CP.dgn

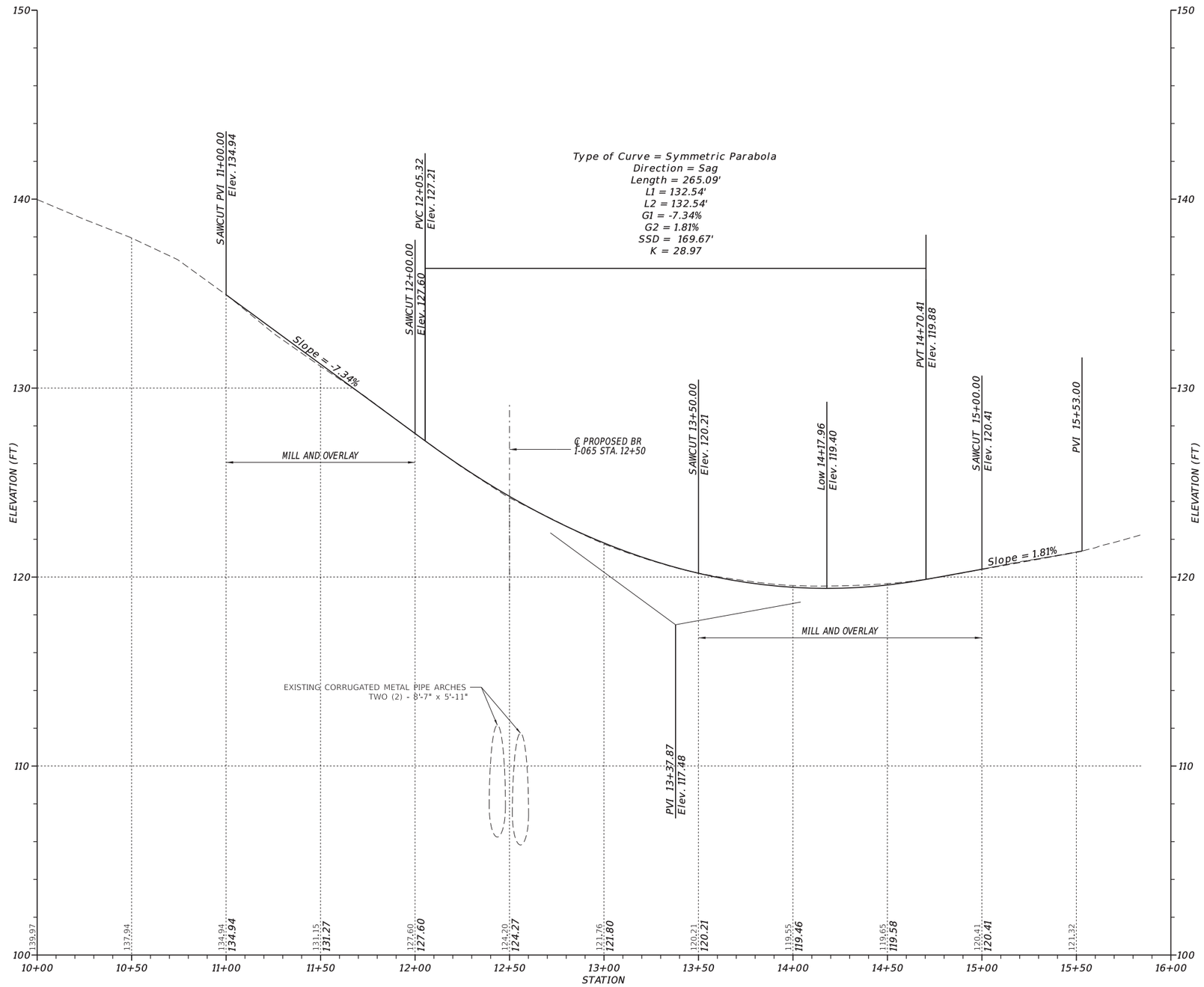

PARKSIDE BLVD (N103230)

VERTICAL SCALE FEET
9
6
3
0

ADDENDA / REVISIONS	

SCALE
0 30 60 90
FEET

BR 1-065 ON PARKSIDE BOULEVARD OVER PERKINS RUN

CONTRACT	BRIDGE NO.	1-065
T201707105	DESIGNED BY:	SWW
COUNTY		
NEW CASTLE	CHECKED BY:	SMW

PROFILE

SECTION
BR
SHEET NO.
9

4-NOV-2019
13:48
Y:\NEWCASTL\103230\Bridge\T201707105\500_CADD\530_PLANS_DGN\PF.dgn

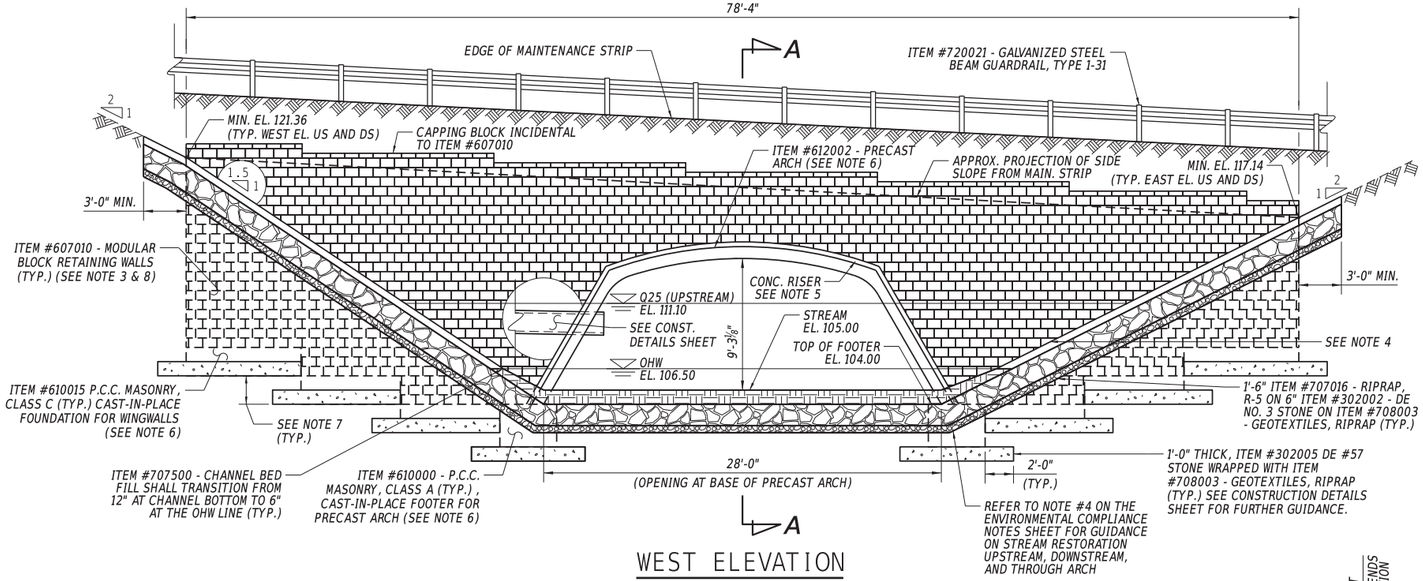

WEST ELEVATION

3/16" = 1'-0"

NOTE: MINIMUM ELEVATION CORRESPONDS TO SIDESLOPE PROJECTION FROM ROADWAY TIEING INTO SIDESLOPE ALONG CHANNEL.

NOTES:

1. FACTORED BEARING RESISTANCE NOT TO EXCEED 22.0 KSF FOR ALL ELEMENTS.
2. PRECAST ARCH TO BE DESIGNED AND PROVIDED BY OTHERS, PAID UNDER ITEM #612002 - PRECAST CONCRETE ARCH. FOUNDATION FOR PRECAST ARCH TO BE DESIGNED BY OTHERS, PAID UNDER ITEM #610000 - P.C.C. MASONRY, CLASS A.
3. MODULAR BLOCK RETAINING WALLS TO BE DESIGNED AND PROVIDED BY OTHERS, PAID UNDER ITEM #607010 - MODULAR BLOCK RETAINING WALLS. SUBMITTAL WILL INCLUDE SHAPE AND COLOR OF BRICKS WHICH SHALL BE FLAT FACED AND DARK RED OR SIMILAR.
4. PLACE ITEM #908004 - TOPSOIL, 6" DEPTH, ITEM #908019 - PERMANENT GRASS SEEDING, STREAMBANK, AND ITEM #908020 - EROSION CONTROL BLANKET MULCH ON SIDE SLOPES PER ENVIRONMENTAL COMPLIANCE NOTES.
5. CONCRETE RISER TO BE CAST WITH ARCH. CONCRETE RISER SHALL SERVE AS STOP FOR BOTTOM ROW OF MODULAR BLOCK RETAINING WALLS AS WELL AS COVER MITER CUTS OF BRICK UNITS TO ACCOMMODATE SHAPE OF ARCH. CONCRETE RISER TO BE DESIGNED BY OTHERS, INCIDENTAL TO ITEM #612002 - PRECAST CONCRETE ARCH.
6. FOR QUANTITY ESTIMATION OF ITEM #610000, IT WAS ASSUMED THAT A CROSS SECTION OF 4'-0" WIDE x 3'-0" TALL FOUNDATION WAS USED FOR THE LENGTH OF ARCH.
7. DUE TO MODULAR BLOCK RETAINING WALL BEING DESIGNED BY OTHERS AND THE POSSIBILITY OF VARIATION IN THE ELEVATION OF ROCK THIS DIMENSION MAY VARY. CONTRACTOR AND ENGINEER WILL VERIFY REQUIRED STEPPING OF MODULAR WALL IN THE FIELD. FOR QUANTITY ESTIMATION PURPOSES, IT WAS ASSUMED STEPS OF 2'-0" WERE USED.
8. FOR QUANTITY ESTIMATION OF ITEM #607010, THE DEPTH AND REQUIRED AMOUNT OF MODULAR BLOCK RETAINING WALLS WERE ESTIMATED BASED ON BORING LOGS AND STEPS MENTIONED IN NOTE 7. THE SIZE OF POSSIBLE CONCRETE LEVELING PAD/FOUNDATION FOR MODULAR BLOCK RETAINING WALLS WERE ESTIMATED TO BE 1'-0" DEEP AND 3'-0" WIDE FOR ITEM #610015 - P.C.C. MASONRY, CLASS C.
9. CONTRACTOR WILL SUBMIT DESIGN OF PRECAST ARCH, PRECAST ARCH FOOTER, AND MODULAR BLOCK RETAINING WALLS FOR ENGINEER'S APPROVAL. PAYMENT FOR SUBMITTALS INCIDENTAL TO RESPECTIVE ITEMS.

ALIGNMENT WORKING POINTS

PT.	STATION	OFFSET	NORTHING	EASTING
101	12+10.83	-40.00	655117.99	638665.19
102	12+36.00	-40.00	655106.01	638687.32
103	12+36.00	32.17	655042.55	638652.95
104	12+10.83	32.17	655054.54	638630.82
201	12+64.57	-39.99	655092.67	638711.94
202	12+94.56	-38.05	655080.68	638734.07
203	12+85.77	33.60	655017.23	638699.70
204	12+63.66	32.17	655029.21	638677.57
301	12+50.00	0.00	655064.17	638680.58

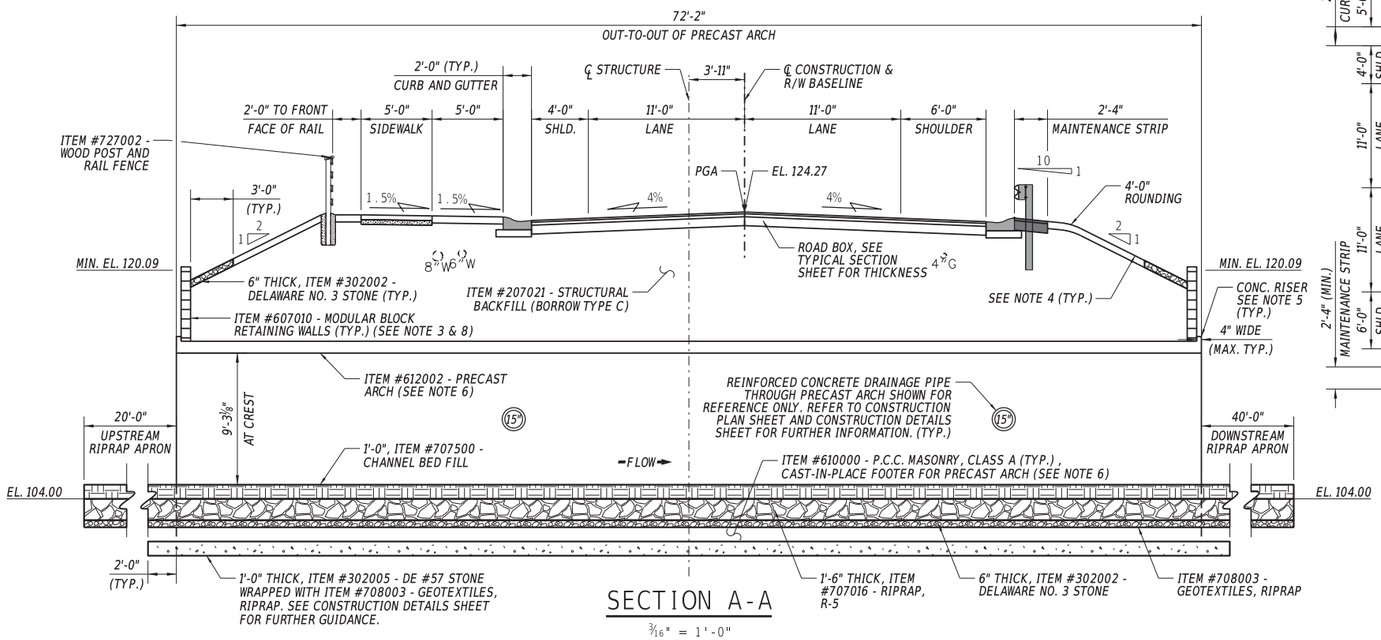

SECTION A-A

3/16" = 1'-0"

NOTE: MINIMUM ELEVATION CORRESPONDS TO TOP OF MODULAR BLOCK RETAINING WALL AND DOES NOT INCLUDE CAPPING BLOCK.

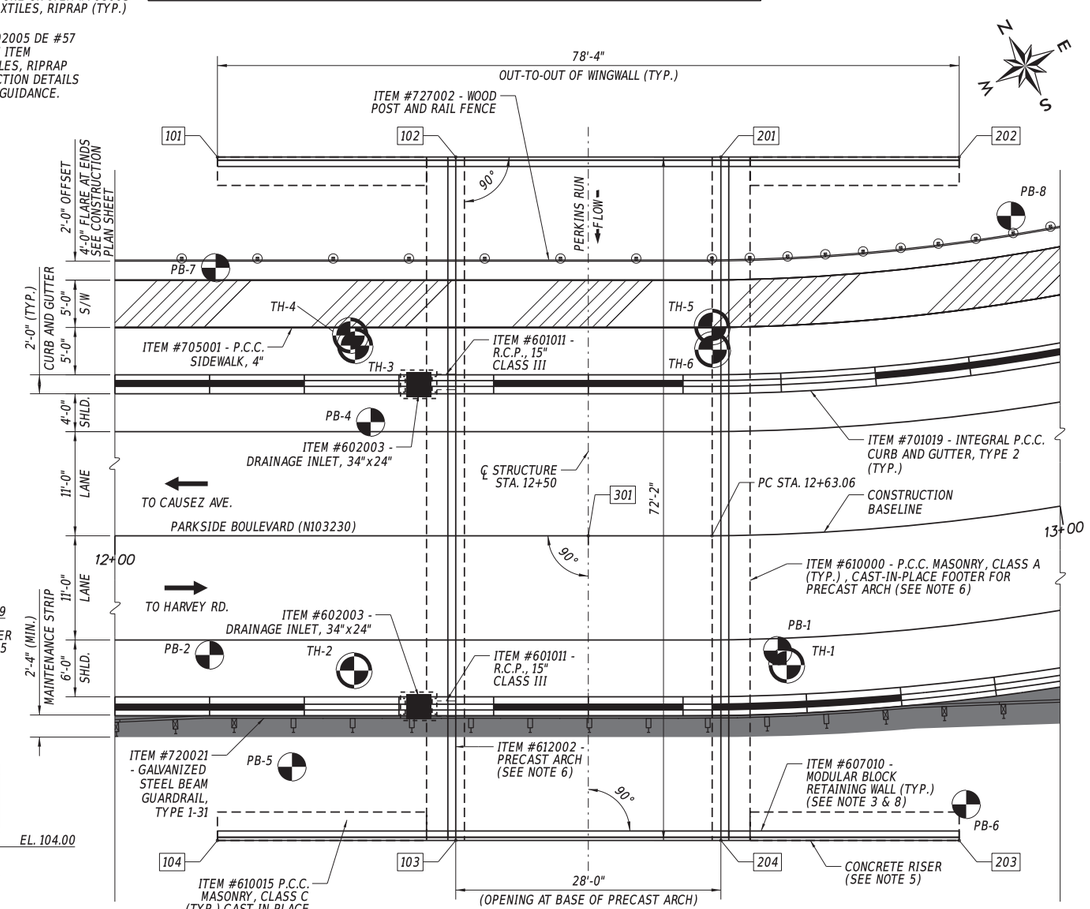

PLAN

1/8" = 1'-0"

NOTE: RIPRAP NOT SHOWN FOR CLARITY. RIPRAP APRON SHALL EXTEND 20'-0" UPSTREAM MEASURED FROM STREAM FACE OF NORTH RETAINING WALLS AND 40'-0" DOWNSTREAM MEASURED FROM STREAM FACE OF SOUTH RETAINING WALLS.

ADDENDA / REVISIONS		SCALE AS NOTED	BR 1-065 ON PARKSIDE BOULEVARD OVER PERKINS RUN	CONTRACT T201707105	BRIDGE NO. 1-065	BRIDGE PLAN, SECTION AND ELEVATION	SECTION BR
				COUNTY NEW CASTLE	DESIGNED BY: SWW		SHEET NO. 10
					CHECKED BY: SMW		

4-NOV-2019
13:48
Y:\NEWCASTL\103230\Bridge\T201707105\500_CADD\530_PLANS_DGN\PE.dgn

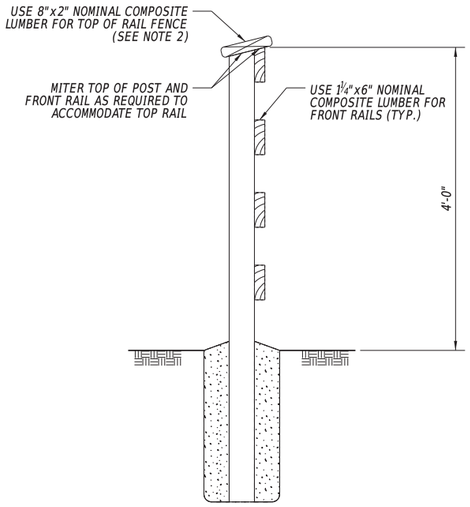

TYPICAL WOOD POST AND RAIL FENCE SECTION

1" = 1'-0"

NOTES:
1. REFER TO DELDOT STANDARD CONSTRUCTION DETAIL M-5 FOR FURTHER DETAILS (TYP.)
2. COMPOSITE MATERIAL MUST BE TREX OR COMPARABLE ALTERNATIVE APPROVED BY ENGINEER.

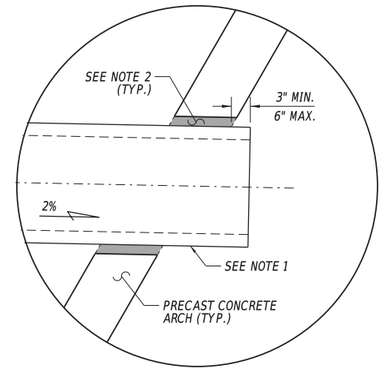

PIPE COLLAR DETAIL

1" = 1'-0"

NOTES:
1. DETAIL OF 15" RCP DRAINAGE PIPE PROTRUDING THROUGH THE SIDE OF THE ARCH IS TO BE DESIGNED BY OTHERS AND INCLUDED IN THE SHOP DRAWINGS FOR APPROVAL BY THE ENGINEER. MAINTAIN GEOMETRY LISTED IN THE DRAINAGE INLET AND DRAINAGE PIPE SCHEDULE ON THE CONSTRUCTION PLAN SHEET. PAYMENT FOR PIPE COLLAR DETAIL DESIGN TO BE INCLUDED UNDER ITEM #612002 - PRECAST CONCRETE ARCH.
2. AFTER PIPE INSTALLATION, FILL THE SURROUNDING VOID BETWEEN THE ARCH AND DRAINAGE PIPE WITH HIGH-STRENGTH, NON-SHRINK GROUT. PAYMENT FOR FURNISHING AND PLACING GROUT FOR PIPE COLLAR IS INCIDENTAL TO ITEM #612002 - PRECAST CONCRETE ARCH.

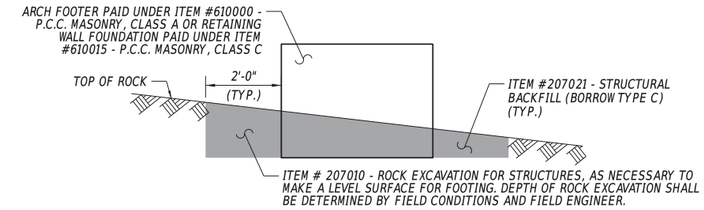

ROCK EXCAVATION

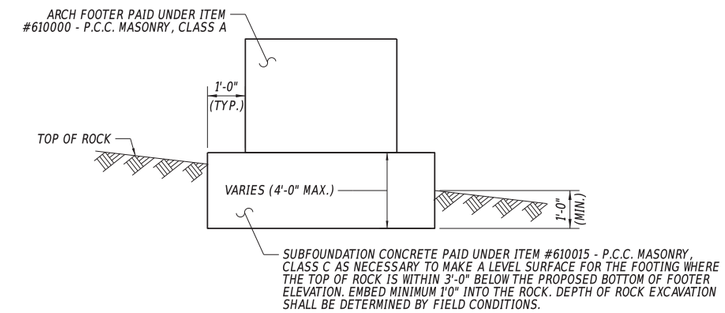

SUBFOUNDATION CONCRETE

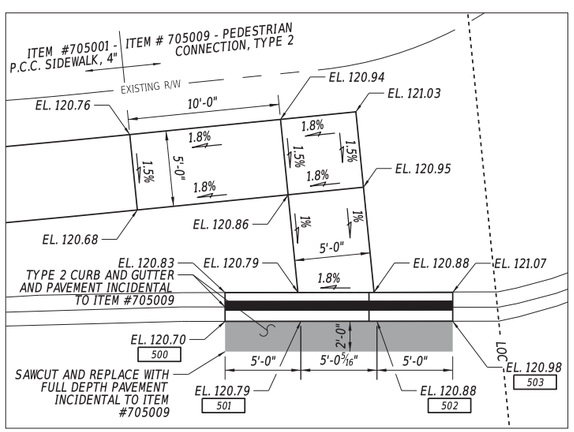

PEDESTRIAN CONNECTION

1" = 5'-0"

NOTE: SIDEWALK SURFACE DETECTABLE WARNING SYSTEM NOT SHOWN FOR CLARITY

COORDINATE LIST

PT.	STATION	OFFSET	NORTHING	EASTING
500	15+35.02	-14.11	655089.52	638940.88
501	15+40.00	-13.61	655091.97	638945.24
502	15+45.00	-13.11	655094.43	638949.62
503	15+49.97	-12.61	655096.88	638953.98

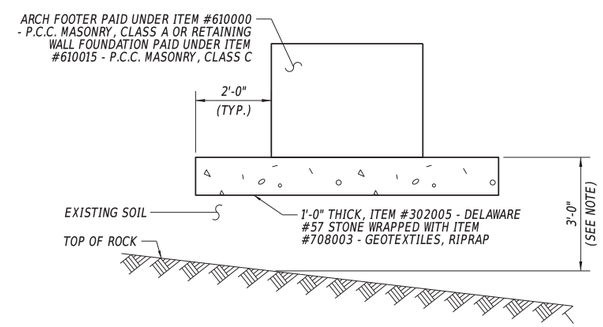

COARSE AGGREGATE

FOUNDATION DETAILS

(N.T.S.)

NOTE: 3'-0" MINIMUM MEASUREMENT CORRESPONDS TO MINIMUM REQUIRED DEPTH BETWEEN ANY POINT ALONG THE CROSS SECTION OF THE ARCH FOOTER OR RETAINING WALL LEVELING PAD/FOUNDATION RELATIVE TO THE TOP ELEVATION ROCK. FOUNDATION DETAIL MAY VARY ALONG THE LENGTH OF THE ARCH FOOTER OR RETAINING WALL LEVELING PAD/FOUNDATION BASED ON VARYING ROCK ELEVATION.

ADDENDA / REVISIONS

SCALE AS NOTED

BR 1-065 ON PARKSIDE BOULEVARD OVER PERKINS RUN

CONTRACT	BRIDGE NO.	1-065
T201707105	DESIGNED BY:	SWW
COUNTY		
NEW CASTLE	CHECKED BY:	SMW

CONSTRUCTION DETAILS

SECTION: BR

SHEET NO. 11

4-NOV-2019
13:48
Y:\NEWCASTL\103230\Bridge\T201707105\500_CADD\530_PLANS_DGN\PE.dgn

BORING: PB-1 **DATE DRILLED:** 10/3/17
STATION: 12+69.57 **OFFSET:** 12.26 **ELEVATION:** 122.53 **NORTHING:** 655043.99 **EASTING:** 638692.40
COMMENTS: DRILLER: JASON TRUVER LOGGED BY: RANDY FERGUSON

SAMPLE INFORMATION

NO.	DEPTH	BLOWS / 6"	DESCRIPTION	CLASS / G.I.	REMARKS
1	1.0 2.0		NO SIEVE ANALYSIS - INDICATION OF MOIST BROWN SILTY FINE TO COARSE SAND W/SOME FINE GRAVEL.		HOT-MIX 3", STONE 8"
2	2.0 4.0	8 6 7 7	WET STIFF BROWN CLAYEY SILT W/SOME FINE SAND, TRACE OF COARSE SAND.	A-4(6)	
3	4.0 6.0	5 6 9 12	WET STIFF BROWN SILTY CLAY W/SOME FINE SAND AND FINE GRAVEL, TRACE OF COARSE SAND.	A-6(5)	
4	6.0 8.0	11 16 14 13	WET HARD BROWN CLAYEY SILT W/TRACE COARSE TO FINE SAND AND FINE GRAVEL.	A-4(6)	
5	8.0 10.0	6 5 8 7	WET STIFF BROWN CLAYEY SILT W/TRACE COARSE TO FINE SAND AND FINE GRAVEL.	A-4(3)	
6	10.0 12.0	5 9 9 9	WET VERY STIFF BROWN CLAYEY SILT W/SOME FINE GRAVEL, TRACE OF FINE TO COARSE SAND.	A-4(4)	
U-1	12.0 14.0		WET VERY STIFF BROWN CLAYEY SILT W/SOME FINE GRAVEL, TRACE OF FINE TO COARSE SAND.	A-4(4)	SHELBY TUBE - PRESS SAMPLE
8	14.0 16.0	15 21 25 29	WET HARD BROWN SILT W/SOME FINE TO COARSE SAND AND FINE GRAVEL.	A-4(0)	
9	16.0 18.0	50/5	WET HARD BROWN COARSE SANDY FINE GRAVELLY SILT W/TRACE FINE SAND.	A-4(0)	DEPTH TO WATER 17.6 FT
10	18.0 24.0	5 19 21 15	WET DENSE BROWN SILTY FINE GRAVEL W/SOME COARSE TO FINE SAND.	A-1-B	APPROXIMATE DEPTH OF EXCAVATION
11	24.0 24.9	50/3	WET DENSE BROWN SILTY FINE SAND AND FINE GRAVEL W/SOME COARSE SAND.	A-2-4(0)	
R-1	24.9 29.9		GRANITE		RECOVERY 97%, RQD 93%
	29.9		END BORING		

BORING: PB-2 **DATE DRILLED:** 10/3/17
STATION: 12+10.00 **OFFSET:** 12.59 **ELEVATION:** 126.37 **NORTHING:** 655072.15 **EASTING:** 638639.41
COMMENTS: DRILLER: BILLY HOLDEN LOGGED BY: RANDY FERGUSON

SAMPLE INFORMATION

NO.	DEPTH	BLOWS / 6"	DESCRIPTION	CLASS / G.I.	REMARKS
1	0.5 2.0		MOIST BROWN CLAYEY FINE GRAVELLY SILT W/SOME FINE SAND, TRACE OF COARSE SAND.	A-4(2)	HOT-MIX 4", STONE 4"
2	2.0 4.0	11 6 7 8	WET STIFF BROWN CLAYEY SILT W/TRACE FINE TO COARSE SAND AND FINE GRAVEL.	A-4(7)	
3	4.0 6.0	9 8 9 9	NO SIEVE ANALYSIS - INDICATION OF WET STIFF BROWN CLAYEY SILT W/TRACE FINE TO COARSE SAND AND FINE GRAVEL.		
4	6.0 8.0	4 5 6 5	NO RECOVERY		
5	8.0 10.0	4 4 5 4	NO SIEVE ANALYSIS - INDICATION OF WET STIFF BROWN CLAYEY SILT W/TRACE FINE TO COARSE SAND AND FINE GRAVEL.		
6	10.0 12.0	4 4 3 5	WET STIFF CLAYEY SILT W/TRACE COARSE TO FINE SAND AND FINE GRAVEL.	A-4(3)	
7	12.0 14.0	3 3 4 5	WET STIFF CLAYEY SILT W/SOME COARSE SAND, TRACE OF FINE GRAVEL AND FINE SAND.	A-4(3)	
8	14.0 16.0	3 5 5 5	WET STIFF BROWN SILT W/SOME COARSE TO FINE SAND AND CLAY, TRACE OF FINE GRAVEL.	A-4(1)	
9	16.0 18.0	7 9 8 8	WET VERY STIFF BROWN SILT W/SOME COARSE TO FINE SAND AND CLAY, TRACE OF FINE GRAVEL.	A-4(2)	
10	18.0 19.0	4 50	WET FIRM GRAY CLAYEY SILT W/SOME FINE TO COARSE SAND, TRACE OF FINE GRAVEL.	A-4(3)	DEPTH TO WATER 18 FT
R-1	19.0 24.0		GRANITE		RECOVERY 55%, RQD 0%
R-1	24.0 29.0		GRANITE		RECOVERY 93%, RQD 82%
	29.0		END BORING		

BORING: PB-3A **DATE DRILLED:** 07/16/18
STATION: 13+22.19 **OFFSET:** -12.22 **ELEVATION:** 120.62 **NORTHING:** 655048.75 **EASTING:** 638750.08
COMMENTS: DRILLER: BILLY, LILLIAN LOGGED BY: RANDY FERGUSON

SAMPLE INFORMATION

NO.	DEPTH	BLOWS / 6"	DESCRIPTION	CLASS / G.I.	REMARKS
1	0.0 16.5		BLANK AUGER		
R-1	16.5 21.5		GRANITE		RECOVERY 98%, RQD 87%
	21.5		END BORING		

BORING: PB-4 **DATE DRILLED:** 07/16/18
STATION: 12+27.00 **OFFSET:** -12.01 **ELEVATION:** 125.01 **NORTHING:** 655085.68 **EASTING:** 638666.07
COMMENTS: DRILLER: JASON, CECIL, HECTOR LOGGED BY: RANDY FERGUSON

SAMPLE INFORMATION

NO.	DEPTH	BLOWS / 6"	DESCRIPTION	CLASS / G.I.	REMARKS
1	0.0 29.3		BLANK AUGER		APPROXIMATE DEPTH OF EXCAVATION
R-1	29.3 34.3		GRANITE		RECOVERY 98%, RQD 43%
	34.3		END BORING		

BORING: PB-5 **DATE DRILLED:** 03/05/19
STATION: 12+18.71 **OFFSET:** 24.39 **ELEVATION:** 125.37 **NORTHING:** 655057.62 **EASTING:** 638641.45
COMMENTS: DRILLER: BILLY, CECIL, LILLIAN LOGGED BY: RANDY FERGUSON

SAMPLE INFORMATION

NO.	DEPTH	BLOWS / 6"	DESCRIPTION	CLASS / G.I.	REMARKS
1	0.0 9.0		BLANK AUGER		
R-1	9.0 14.0		GRANITE		RECOVERY 57%, RQD 57%
R-2	14.0 19.0				NO SAMPLE RECOVERY
R-3	19.0 24.0		GRANITE		RECOVERY 13%, RQD 8%
R-4	24.0 29.0		GRANITE		RECOVERY 22%, RQD 18%
R-5	29.0 34.0		GRANITE		RECOVERY 18%, RQD 18%
R-6	34.0 39.0		GRANITE		RECOVERY 35%, RQD 20%
	39.0		END BORING		

BORING: PB-6 **DATE DRILLED:** 03/06/19
STATION: 12+86.78 **OFFSET:** 29.87 **ELEVATION:** 120.48 **NORTHING:** 655020.24 **EASTING:** 638702.18
COMMENTS: DRILLER: BILLY, CECIL, LILLIAN, ZAC LOGGED BY: RANDY FERGUSON

SAMPLE INFORMATION

NO.	DEPTH	BLOWS / 6"	DESCRIPTION	CLASS / G.I.	REMARKS
1	0.0 3.0		BLANK AUGER		
R-1	3.0 8.0		GRANITE		RECOVERY 63%, RQD 48%
R-2	8.0 13.0		GRANITE		RECOVERY 44%, RQD 13%
R-3	13.0 18.0				NO SAMPLE RECOVERY
R-4	18.0 23.0		GRANITE		RECOVERY 42%, RQD 22%
R-5	23.0 28.0		GRANITE		RECOVERY 100%, RQD 88%
R-6	28.0 33.0		GRANITE		RECOVERY 97%, RQD 93%
	33.0		END BORING		

BORING: PB-7 **DATE DRILLED:** 03/12/19
STATION: 12+10.62 **OFFSET:** -28.30 **ELEVATION:** 125.45 **NORTHING:** 655107.80 **EASTING:** 638659.43
COMMENTS: DRILLER: BILLY, CECIL, CURT LOGGED BY: RANDY FERGUSON

SAMPLE INFORMATION

NO.	DEPTH	BLOWS / 6"	DESCRIPTION	CLASS / G.I.	REMARKS
1	0.0 4.0		BLANK AUGER		
R-1	4.0 9.0		GRANITE		RECOVERY 50%, RQD 50%
R-2	9.0 14.0		GRANITE		RECOVERY 18%, RQD 18%
R-3	14.0 19.0		GRANITE		RECOVERY 17%, RQD 13%
R-4	19.0 24.0		GRANITE		RECOVERY 8%, RQD 0%
R-5	24.0 29.0		GRANITE		RECOVERY 82%, RQD 55%
	29.0		END BORING		

BORING: PB-8 **DATE DRILLED:** 03/04/19
STATION: 12+99.77 **OFFSET:** -31.12 **ELEVATION:** 120.99 **NORTHING:** 655072.65 **EASTING:** 638735.91
COMMENTS: DRILLER: BILLY, CECIL, LILLIAN LOGGED BY: RANDY FERGUSON

SAMPLE INFORMATION

NO.	DEPTH	BLOWS / 6"	DESCRIPTION	CLASS / G.I.	REMARKS
1	0.0 19.0		BLANK AUGER		
R-1	19.0 24.0		GRANITE		RECOVERY 92%, RQD 92%
R-2	24.0 29.0		GRANITE		RECOVERY 97%, RQD 97%
	29.0		END BORING		

NOTES:

1. *BORING LOGS ARE CREATED BY THE DELAWARE DEPARTMENT OF TRANSPORTATION. SUBSURFACE EXPLORATION COMPLETED BY WALTON CORPORATION.*
2. *SOIL SAMPLING: 2 IN. OUTSIDE DIA. SPLIT BARREL SAMPLER, DRIVEN WITH A 140 LB. HAMMER FALLING 30 IN.*
3. *ALL DEPTHS GIVEN ARE IN FEET.*
4. *PB-3A, PB-4, PB-5, PB-6, PB-7, AND PB-8 WERE EXPLORATORY DRILLING TO DETERMINE ROCK ELEVATIONS. NO STANDARD PENETRATION TESTING OR SOIL SAMPLING WAS PERFORMED. ROCK CORES WERE COLLECTED.*
5. *REFER TO CONSTRUCTION PLAN SHEET FOR BORING LOCATIONS.*
6. *SOIL BORING LOGS ARE LABELED AS PB-1 AND PB-2.*

ADDENDA / REVISIONS

NOT TO SCALE

BR 1-065 ON PARKSIDE BOULEVARD OVER PERKINS RUN

CONTRACT	BRIDGE NO.	1-065
T201707105	DESIGNED BY:	SWW
COUNTY	CHECKED BY:	SMW
NEW CASTLE		

BORING LOGS

SECTION
BR
SHEET NO.
12

4-NOV-2019
13:48
Y:\NEWCASTL\103230\Bridge\T201707105\500_CADD\530_PLANS_DGN\BO.dgn

EROSION NOTES:

1.

EROSION POTENTIAL FOR THIS PROJECT	CONTRACTOR EROSION AND SEDIMENT CONTROL SUPERVISOR REQUIREMENT
( ) INSIGNIFICANT	NONE
( ) MINOR	CONTRACTOR TRAINING PROGRAM, AS DEFINED IN SECTION 6.2 OF THE DELAWARE SEDIMENT AND STORMWATER REGULATIONS.
(X) MAJOR	CERTIFIED CONSTRUCTION REVIEWER (CCR), AS DEFINED IN SECTION 6.3 OF THE DELAWARE SEDIMENT AND STORMWATER REGULATIONS.

2. THE DISTURBED AREA FOR THIS PROJECT IS 0.6747 ACRES.

3. THE ADDITIONAL IMPERVIOUS AREA FOR THIS PROJECT IS 2052 SQUARE FEET.

4. THE SEDIMENT AND STORMWATER MANAGEMENT PLANS HAVE BEEN APPROVED BY DELDOT'S STORMWATER ENGINEER UNDER DELDOT'S DELEGATED AUTHORITY. THE SEDIMENT AND STORMWATER MANAGEMENT PLANS ARE VALID FOR A FIVE YEAR PERIOD, BEGINNING ON THE DATE THE STORMWATER ENGINEER SIGNED THE CONSTRUCTION SEQUENCE SHEET. IF THE FINAL ACCEPTANCE OF THE PROJECT IS ANTICIPATED TO EXTEND BEYOND THE FIVE YEARS, THE CONTRACTOR WILL INFORM THE ENGINEER THREE MONTHS PRIOR TO THE EXPIRATION OF THE APPROVED SEDIMENT AND STORMWATER MANAGEMENT PLANS. THE STORMWATER ENGINEER WILL REVIEW THE CURRENT SEDIMENT AND STORMWATER MANAGEMENT PLAN AND ISSUE AN EXTENSION WITH ANY APPROPRIATE MODIFICATIONS.

ATSSA REQUIREMENTS:

1. AMERICAN TRAFFIC SAFETY SERVICES ASSOCIATION (ATSSA) CERTIFIED TRAFFIC CONTROL SUPERVISOR REQUIREMENT FOR THIS PROJECT.

(X)	THE CONTRACTOR SHALL NOT BE REQUIRED TO HAVE AN ATSSA SUPERVISOR ASSIGNED TO THIS PROJECT.
( )	THE CONTRACTOR SHALL HAVE AN ATSSA SUPERVISOR ASSIGNED TO THIS PROJECT. THE CONTRACTOR'S GENERAL SUPERINTENDENT FOR THIS PROJECT OR ANOTHER ATSSA CERTIFIED MEMBER OF THE CONTRACTOR'S PROJECT STAFF MAY BE THE ATSSA SUPERVISOR. PAYMENT FOR ATSSA SUPERVISOR IS INCIDENTAL TO ITEM 801000.

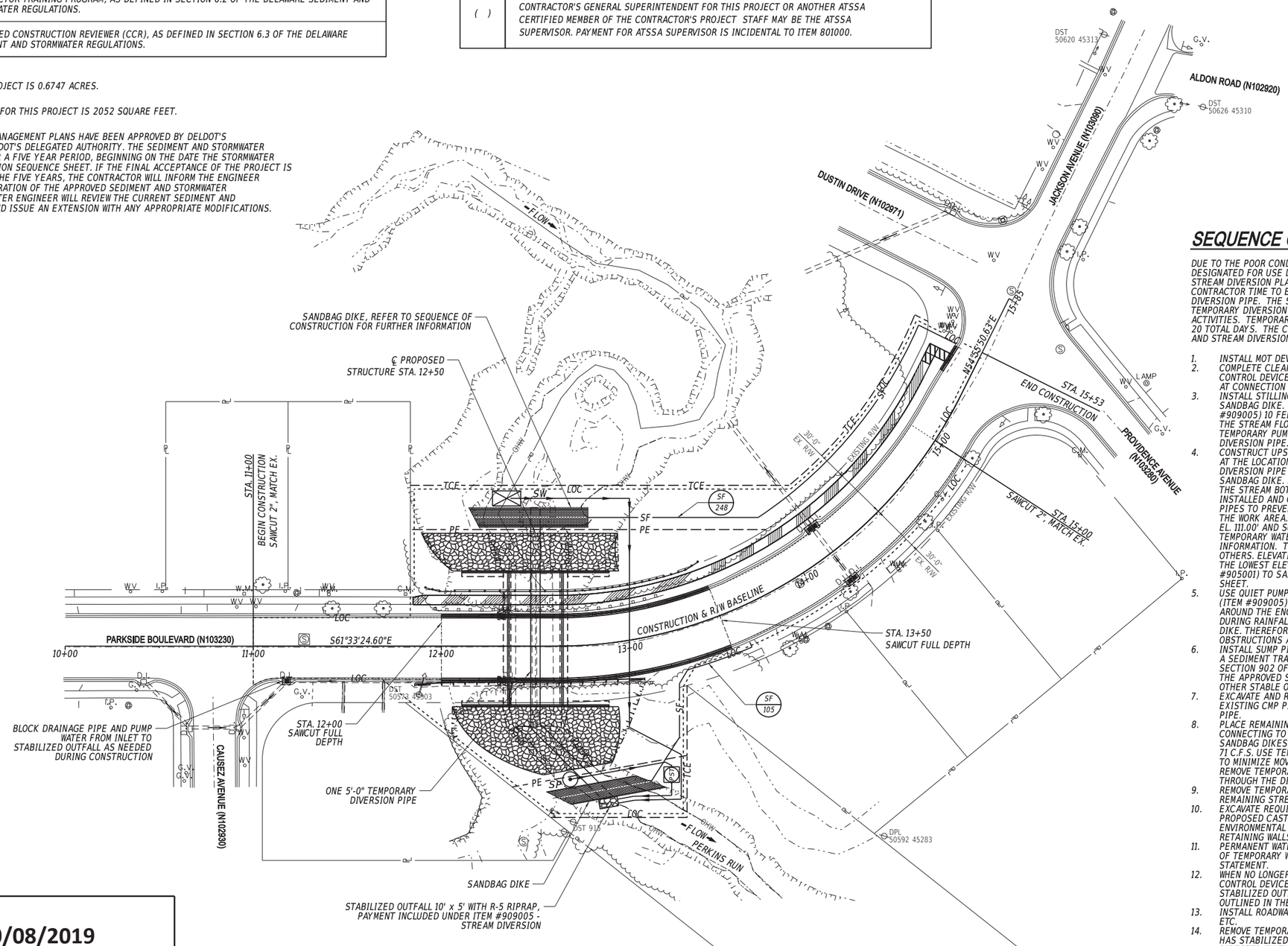

SEQUENCE OF CONSTRUCTION:

DUE TO THE POOR CONDITION OF THE EXISTING CORRUGATED METAL PIPES, THEY ARE NOT DESIGNATED FOR USE DURING THE FOLLOWING PROPOSED CONSTRUCTION SEQUENCE. PROPOSED STREAM DIVERSION PLAN WILL CONSIST FIRST OF TEMPORARY PUMPING, ALLOWING THE CONTRACTOR TIME TO EXCAVATE, REMOVE THE EXISTING STRUCTURE, AND PLACE THE TEMPORARY DIVERSION PIPE. THE SECOND PHASE OF THE STREAM DIVERSION PLAN WILL INCLUDE USE OF THE TEMPORARY DIVERSION PIPE ONLY, DURING STRUCTURE INSTALLATION AND SUBSEQUENT ACTIVITIES. TEMPORARY PUMPING WITH BYPASS PUMPS SHOULD NOT BE USED FOR LONGER THAN 20 TOTAL DAYS. THE CONTRACTOR MAY SUBMIT AN ALTERNATIVE SEQUENCE OF CONSTRUCTION AND STREAM DIVERSION TECHNIQUE, FOR APPROVAL BY THE ENGINEER.

1. INSTALL MOT DEVICES IN ACCORDANCE WITH THE DETOUR PLAN.
2. COMPLETE CLEARING AND GRUBBING (ITEM #201000), INSTALL INLET SEDIMENT CONTROL DEVICES (ITEM #905004), AND INSTALL SILT FENCE (ITEM #905001) EXCEPT AT CONNECTION TO SANDBAG DIKES (ITEM #909005).
3. INSTALL STILLING WELL (ITEM #909005) JUST UPSTREAM OF THE PROPOSED UPSTREAM SANDBAG DIKE. AT THE PROPOSED DOWNSTREAM OUTFALL, PLACE R-5 RIPRAP (ITEM #909005) 10 FEET WIDE ACROSS THE STREAM BY 5 FEET LONG IN THE DIRECTION OF THE STREAM FLOW. THE STABILIZED OUTFALL WILL SERVE AS THE OUTLET FOR THE TEMPORARY PUMPING PROCEDURE AS WELL AS THE OUTLET FOR THE TEMPORARY DIVERSION PIPE.
4. CONSTRUCT UPSTREAM SANDBAG DIKE FOLLOWED BY THE DOWNSTREAM SANDBAG DIKE AT THE LOCATIONS SHOWN. PLACE A MINIMUM OF ONE LENGTH OF 5' DIAMETER DIVERSION PIPE (ITEM #909005) THROUGH THE UPSTREAM AND DOWNSTREAM SANDBAG DIKE. PLACE THE UPSTREAM END OF THE PIPE TO MATCH THE ELEVATION OF THE STREAM BOTTOM. THE REMAINING LENGTH OF THE DIVERSION PIPE WILL BE INSTALLED AND CONNECTED LATER IN THE SEQUENCE. SEAL OFF THE INLET OF BOTH PIPES TO PREVENT STREAM FLOW FROM PASSING THROUGH THE PIPE AND ENTERING THE WORK AREA. CREATE A LEVEL TOP SURFACE OF THE UPSTREAM SANDBAG DIKE AT EL. 111.00' AND SUFFICIENT ENOUGH TO PROVIDE AS THE BEDDING SURFACE FOR THE TEMPORARY WATER LINE RELOCATION, REFER TO UTILITY STATEMENT FOR FURTHER INFORMATION. TEMPORARY WATER LINE TO BE INSTALLED AND SECURED IN PLACE BY OTHERS. ELEVATION OF THE DOWNSTREAM SANDBAG DIKE SHALL NOT BE HIGHER THAN THE LOWEST ELEVATION OF THE UPSTREAM SANDBAG DIKE. CONNECT SILT FENCE (ITEM #905001) TO SANDBAG DIKES TO ENCLOSE THE WORK AREA AS INDICATED ON THIS SHEET.
5. USE QUIET PUMP (PUMP SPECIFICATION AVERAGE SOUND LEVEL LESS THAN 75Dba) (ITEM #909005) TO DIVERT THE STREAM BASE FLOW, ESTIMATED FLOW 9 C.F.S., AROUND THE ENCLOSED WORK AREA. WHEN THE FLOW IS HIGHER THAN PUMP CAPACITY DURING RAINFALL EVENTS, THE STREAM FLOW IS ALLOWED TO FLOW OVER THE SANDBAG DIKE. THEREFORE, THE ENCLOSED AREA SHALL BE KEPT CLEAR OF DEBRIS AND OBSTRUCTIONS AT THE END OF EACH WORKDAY.
6. INSTALL SUMP PIT (ITEM #906003) AND PORTABLE SEDIMENT TANK (ITEM #906001) AS A SEDIMENT TRAPPING DEVICE. DEWATER THE WORK AREA IN ACCORDANCE WITH SECTION 902 OF THE STANDARD SPECIFICATIONS. DISCHARGE CLEAN EFFLUENT FROM THE APPROVED SEDIMENT TRAPPING DEVICE AT THE STABILIZED OUTFALL OR ON OTHER STABLE OUTLET AS APPROVED BY THE ENGINEER.
7. EXCAVATE AND REMOVE ABANDONED GAS LINE, ABANDONED WATER LINES, AND EXISTING CMP PIPES. PREPARE WORK SITE FOR PLACEMENT OF TEMPORARY DIVERSION PIPE.
8. PLACE REMAINING 5'-0" DIAMETER STREAM DIVERSION PIPE THROUGH WORK AREA, CONNECTING TO SECTIONS OF PIPE CONTAINED IN THE UPSTREAM AND DOWNSTREAM SANDBAG DIKES. THE BASE FLOW THROUGH THE TEMPORARY PIPE IS ESTIMATED TO BE 71 C.F.S. USE TEMPORARY DRAINAGE PIPE WITH WATER-TIGHT JOINTS. SECURE THE PIPE TO MINIMIZE MOVEMENT WHILE IN USE AND PREVENT LEAKAGE INTO THE WORK AREA. REMOVE TEMPORARY BLOCKAGE FROM PIPE INLET TO ALLOW STREAM FLOW TO PASS THROUGH THE DIVERSION DRAINAGE PIPE.
9. REMOVE TEMPORARY PUMPING SYSTEM, ALLOWING DRAINAGE PIPE TO BE THE ONLY REMAINING STREAM DIVERSION METHOD.
10. EXCAVATE REQUIRED SOIL AND ROCK TO ACHIEVE DESIGN ELEVATIONS. INSTALL PROPOSED CAST-IN-PLACE FOOTERS AND PREPARE STREAMBED BETWEEN FOOTERS PER ENVIRONMENTAL CONTROL NOTES. PLACE PRECAST ARCH AND MODULAR BLOCK RETAINING WALLS, AND BACKFILL.
11. PERMANENT WATER LINE TO BE INSTALLED ACROSS STRUCTURE BY OTHERS. REMOVAL OF TEMPORARY WATER LINE TO BE REMOVED BY OTHERS AS INDICATED IN THE UTILITY STATEMENT.
12. WHEN NO LONGER NEEDED, REMOVE SANDBAG DIKES, DIVERSION PIPES, AND SEDIMENT CONTROL DEVICES RELATING TO THE STREAM DIVERSION (I.E. SUMP PIT, STILLING WELL, STABILIZED OUTFALL RIPRAP). RESTORE STREAM TO EXISTING CONDITIONS AS OUTLINED IN THE ENVIRONMENTAL COMPLIANCE NOTES.
13. INSTALL ROADWAY ITEMS, I.E. BACKFILL, PAVEMENT, SIDEWALK, FENCE, GUARDRAIL, ETC.
14. REMOVE TEMPORARY EROSION AND SEDIMENT CONTROL DEVICES AFTER VEGETATION HAS STABILIZED ALL DISTURBED AREAS IN ACCORDANCE WITH THESE PLANS AND AS DIRECTED BY THE ENGINEER.
15. REMOVE ALL MOT DEVICES AND REOPEN THE ROADWAY. REMOVAL OF MOT DEVICES MAY OCCUR PRIOR TO REMOVAL OF TEMPORARY EROSION AND SEDIMENT CONTROL DEVICES.

Vincent W. Davis 10/08/2019

DELDOT STORMWATER ENGINEER — DATE

"I CERTIFY TO THE BEST OF MY KNOWLEDGE AND BELIEF THAT THESE PLANS MEET THE REQUIREMENTS OF THE DELAWARE SEDIMENT AND STORMWATER REGULATIONS AND THAT ALL CLEARING, GRADING, AND CONSTRUCTION WILL BE ACCOMPLISHED PURSUANT TO THE PLAN."

ADDENDA / REVISIONS

SCALE 0 30 60 90 FEET

BR 1-065 ON PARKSIDE BOULEVARD OVER PERKINS RUN

CONTRACT	BRIDGE NO.	1-065
T201707105	DESIGNED BY:	SWW
COUNTY		
NEW CASTLE	CHECKED BY:	SMW

CONSTRUCTION PHASING AND EROSION CONTROL PLAN

SECTION	BR
SHEET NO.	13

7-OCT-2019
11:59
Y:\NEWCASTL\1103230\Bridge\T201707105\500_CADD\530_PLANS_DGN\CP.dgn

ENVIRONMENTAL COMPLIANCE NOTES

1. GENERAL NOTES:

   A. THE PURPOSE OF THIS SHEET IS TO IDENTIFY THOSE ITEMS ASSOCIATED WITH ENVIRONMENTAL COMPLIANCE. IMPACT CALCULATIONS ARE FOR THE AGENCY PERMIT REPORTING PURPOSES ONLY AND ARE NOT TO BE USED FOR BIDDING PURPOSES.

   B. IF A DEPARTURE FROM THE APPROVED PLANS (WHICH WOULD AFFECT ANY NATURAL AND/OR CULTURAL RESOURCES) IS NECESSARY, CONTACT THE ENVIRONMENTAL STUDIES SECTION AT (302-760-2259 OR DOT_ENVIRONMENTALSTUDIES@DELAWARE.GOV) TO ALLOW FOR COORDINATION WITH THE APPROPRIATE RESOURCE AGENCIES AND APPROVAL.

   C. USE OF THIS SHEET DOES NOT ALLEVIATE THE CONTRACTOR'S RESPONSIBILITY TO COMPLY WITH ALL CONDITIONS SET FORTH IN THE ENVIRONMENTAL STATEMENT AND PERMITS.

2. NATURAL RESOURCE ISSUES:

   A. PERMIT REQUIREMENTS/APPROVALS *:
   U.S. ARMY CORPS OF ENGINEERS (COE): NATIONWIDE PERMIT #3 (a) & (c) (NO PCN)
   DNREC - WETLANDS & SUBAQUEOUS LANDS (WLSL): PROJECT CONSISTENT WITH DEL. CODE CH. 72 SECTION 7217, SPECIAL EXEMPTION (B)
   DNREC - WATER QUALITY (WQC) & COASTAL ZONE CONSISTENCY (CZM): ISSUED (PROJECT IS NOT LOCATED IN CRW)
   NCC DEPT. OF LAND USE (NCC): NONE
   CITY OF WILMINGTON (COW): NONE
   US COAST GUARD (USCG): NONE

   NOTE THE ABSENCE OF ASTRISK AFTER A PERMIT (WQC, CZM), INDICATES THAT COORDINATION HAS BEEN DONE WITH THAT AGENCY BUT NO WRITTEN AUTHORIZATION WAS REQUIRED. AS SUCH, NO PAPERWORK FROM THAT AGENCY SHOULD BE ANTICIAPTED.

   * THE PERMITS/APPROVALS LISTED ARE THOSE REQUIRED FOR THIS PROJECT. THE ENVIRONMENTAL STUDIES SECTION IS RESPONSIBLE FOR COORDINATING AND/OR OBTAINING THESE APPROVALS.
   ** THE CONTRACTOR MUST ENSURE THAT THESE PERMITS/APPROVALS ARE IN THEIR POSSESSION PRIOR TO BEGINNING CONSTRUCTION IN THE PERMITTED AREA(S) AND ENSURE THEY ARE DISPLAYED ON-SITE DURING THE ENTIRE CONSTRUCTION PERIOD.

   B. CONSTRUCTION RESTRICTIONS:
   FISHERIES - NONE
   ENDANGERED SPECIES - NONE
   MIGRATORY BIRDS - NONE

3. CULTURAL RESOURCE ISSUES:

   A. AS A RESULT OF THE CURRENT PROJECT COORDINATION, THIS PROJECT IS CONSISTENT WITH STIPULATION III.B.1 OF DELDOT'S PROGRAMMATIC AGREEMENT WITH DE STATE HISTORIC PRESERVATION OFFICE (DE SHPO), FEDERAL HIGHWAY ADMINISTRATION (FHWA) AND ADVISORY COUNCIL ON HISTORIC PRESERVATION (ACHP). THERE ARE NO CULTURAL RESOURCE CONCERNS AS LONG AS THE PROJECT SCOPE IS NOT MODIFIED. NO GROUND DISTURBANCE OR CONSTRUCTION ACTIVITIES MAY TAKE PLACE BEYOND THE LOC. STAGING AND STOCKPILING MUST TAKE PLACE WITHIN THE LOC OR CURRENT ROADWAY FOOTPRINT. ANY CHANGES TO THE SCOPE OF WORK OR FOOTPRINT OF THIS PROJECT MUST BE REVIEWED BY DELDOT QUALIFIED CULTURAL RESOURCES STAFF.
   B. A PORTION OF LESHER MEMORIAL PARK WAS ACQUIRED WITH ASSISTANCE FROM THE LAND AND WATER CONSERVATION FUND (SPECIFICALLY THE NORTHWEST PARCEL ("I-L", # 06-082.00-254), WHICH QUALIFIES THE PROPERTY FOR PROTECTION UNDER SECTION 6(f) OF THE LAND AND WATER CONSERVATION FUND ACT. THIS PROJECT DOES NOT REPRESENT A CONVERSION OF USE OF THE PROTECTED PROPERTY.

4. STREAM RESTORATION AND RIPRAP TREATMENT:

   A. FOLLOW THE SPECIAL PROVISION FOR ITEM #707500 - CHANNEL BED FILL IN REGARDS TO THE SALVAGING OF ON-SITE NATURAL STREAM BOTTOM MATERIAL OR THE FURNISHING OF OFFSITE MATERIAL. IF SUFFICIENT SOURCES FOR CHANNEL BED FILL DO NOT EXIST ON-SITE, ANY NEW MATERIAL MUST CONFORM TO THE REQUIREMENTS OF ITEM #707500 - CHANNEL BED FILL. RECESS ALL RIPRAP IN THE CHANNEL BOTTOM (I.E. BELOW THE WATER LINE) ONE FOOT BELOW STREAM BED ELEVATION AND CHOKE WITH BORROW TYPE 'B' SO THAT ALL OF THE VOIDS IN THE RIPRAP ARE FILLED WITH SPECIFIED MATERIAL. PAYMENT UNDER ITEM #209002 - BORROW, TYPE B. COVER THE RIPRAP WITH A MINIMUM OF 12" CHANNEL BED FILL. MATCH THE FINAL CHANNEL ELEVATIONS WITH EXISTING ELEVATIONS AT THE UPSTREAM AND DOWNSTREAM PROJECT LIMITS. THROUGH THE STRUCTURE, ELEVATIONS WILL BE AS NOTED ON THE PLANS. PAYMENT UNDER ITEM #707500 - CHANNEL BED FILL.

   B. RESTORE OTHER AREAS OF THE CHANNEL BOTTOM AFFECTED BY CONSTRUCTION (INCLUDING, BUT NOT LIMITED TO, THE LOCATION OF SUMP PITS, STABILIZED OUTFALLS, TEMPORARY PIPES AND/OR SANDBAG DIKES AND DIVERSIONS) TO EXISTING CONDITIONS. FILL ANY CAVITIES OR SCOUR HOLES RESULTING FROM CONSTRUCTION ACTIVITIES WITH CHANNEL BED FILL. PAYMENT UNDER ITEM #707500 - CHANNEL BED FILL.

   C. WHEN ALL EROSION AND SEDIMENT CONTROL MEASURES ARE REMOVED AND THE STREAM RETURNS TO ITS NATURAL FLOW CONDITIONS, THE FLOW MUST REMAIN ABOVE GROUND AND ABOVE THE RIPRAP (I.E. THE FLOW CANNOT BE "LOST" IN THE RIPRAP OR BENEATH THE STRUCTURE). IF THIS IS NOT ACHIEVED, THE CONTRACTOR WILL BE REQUIRED TO TAKE CORRECTIVE ACTION AT THE CONTRACTOR'S EXPENSE.

   D. CHOKE ALL RIPRAP ON THE STREAM BANK, OUTSIDE THE CHANNEL BED, WITH DELAWARE #57 STONE. PLACE JUST ENOUGH CHOKE MATERIAL TO PREVENT THE LOSS OF CHANNEL BED FILL OR TOPSOIL (DEPENDING ON LOCATION AS INDICATED BELOW) THROUGH THE RIPRAP.
      1. BENEATH THE BRIDGE: AFTER PLACING DELAWARE #57 STONE, PERFORM A FINAL CHOKE OF CHANNEL BED FILL SO THAT THE RIPRAP PEAKS ARE BARELY VISIBLE. PAYMENT UNDER ITEM #707500 – CHANNEL BED FILL. (DELAWARE #57 STONE IS INCIDENTAL TO THE RIPRAP ITEM)
      2. ALL OTHER LOCATIONS: FINISH FILLING THE VOIDS WITH TOPSOIL SO THAT THE RIPRAP PEAKS ARE BARELY VISIBLE. PLACE AN ADDITIONAL 6-INCH TOPSOIL LAYER ON TOP OF THE RIPRAP. SLOPE SEEDING WILL BE DONE WITH ITEM #908019 – PERMANENT GRASS SEEDING, STREAMBANK. FOLLOWING THE SEEDING OPERATION, INSTALL #ITEM - 908020 – EROSION CONTROL BLANKET (ECB) MULCH. ECB AT TOE OF SLOPE CAN BE EITHER TRENCHED IN OR STAPLED AT 6" ON CENTER. COMPLETE ALL WORK, STARTING WITH THE INITIAL CHOKING WITH TOPSOIL THROUGH THE SEEDING AND MULCHING PRIOR TO ANY RAIN EVENT. DELAWARE #57 STONE IS INCIDENTAL TO THE RIPRAP ITEM. ALL OTHER ITEMS WILL BE PAID FOR UNDER THEIR RESPECTIVE ITEMS.

   E. THE TOPSOIL/SEED/MULCH CAN BE PLACED BEFORE OR AFTER THE REMOVAL OF THE STREAM DIVERSION. IF THE PLACEMENT OCCURS AFTER STREAM DIVERSION REMOVAL, USE A TURBIDITY CURTAIN TO MINIMIZE IN-STREAM SEDIMENTATION. PAYMENT WILL BE INCIDENTAL TO ITEM #909005 - STREAM DIVERSION.

5. PROTECTION OF RESOURCES:

   A. USE SILT FENCE OR CONSTRUCTION SAFETY FENCE ALONG THE LIMITS OF CONSTRUCTION IN ALL AREAS WHERE WATER WETLANDS ARE BEING IMPACTED (AS SHOWN ON ENVIRONMENTAL COMPLIANCE SHEETS), AND ALSO IN ANY AREA WHERE WATER/WETLANDS EXIST WITHIN 20 FEET OF THE LIMIT OF CONSTRUCTION (AS SHOWN ON CONSTRUCTION PLAN SHEETS). ANY CONTRACTOR ACCESS BEYOND THE LIMIT OF CONSTRUCTION IS STRICTLY PROHIBITED.

   B. USE SANDBAGS OR COMPOST FILTER LOG (CFL) TO SECURE SILT FENCE AT AREAS ADJACENT TO WOODED UPLANDS/ ALL WETLANDS IN LIEU OF TRENCHING UNLESS PROPER EROSION AND SEDIMENT CONTROL CANNOT BE MAINTAINED. REMOVE SANDBAGS AND CFLS (AND CONTENTS) IN THEIR ENTIRETY WHEN NO LONGER NEEDED. SANDBAGS/CFLS USED TO SECURE THE SILT FENCE IS INCIDENTAL TO ITEM 905001 - SILT FENCE. THE ENVIRONMENTAL STUDIES SECTION (302-760-2259 OR DOT_ENVIRONMENTALSTUDIES@DELAWARE.GOV) CAN PROVIDE FURTHER GUIDANCE REGARDING THIS METHOD OF INSTALLATION.

   C. CLEARLY MARK ALL TREES TO BE REMOVED WITH PAINT PRIOR TO THE EROSION AND SEDIMENT CONTROL MEETING.

LEGEND

	CREATION AREA
	PERMANENT IMPACT AREA
	TEMPORARY IMPACT AREA
— — — — LOC — — — —	LIMIT OF CONSTRUCTION
—·—·— OHW —·—·—	ORDINARY HIGH WATER
—·—·— POHW —·—·—	PROPOSED ORDINARY HIGH WATER
XX / ?X	IMPACT AREA TYPE ID. (SEE BELOW) / IMPACT AREA ID. AND/OR NUMBER

C = CREATION AREA O = OPEN WATER IMPACT

T = TEMPORARY IMPACT

WETLANDS DELINEATED BY CHRISTIE BONNIWELL ON 08-26-2016 IN ACCORDANCE WITH THE US ARMY CORPS OF ENGINEERS "CORPS OF ENGINEERS WETLAND DELINEATION MANUAL (1987)".

NO WETLANDS EXIST WITHIN THE PROJECT LIMITS.

ORIGINAL SHEET PREPARED BY SEAN WEAVER ON 06-25-2018. SHEET LAST UPDATED ON 2-25-2019.

TEMPORARY OPEN WATER IMPACT AREA SCHEDULE

ID	IMPACT DESCRIPTION	AREA (SF)	AREA (AC)	VOLUME (CY)	JURISDICTION
OT-1	STILLING WELL	120.00	0.0028	22.22	USACE/DNREC
OT-2	UPSTREAM SANDBAG DIKE	553.97	0.0127	512.94	USACE/DNREC
OT-3	STREAM DIVERSION PIPE	514.75	0.0118	38.13	USACE/DNREC
OT-4	EXISTING PIPE TO RIPRAP	1416.30	0.0325	78.68	USACE/DNREC
OT-5	SUMP PIT	50.27	0.0012	3.72	USACE/DNREC
OT-6	DOWNSTREAM SANDBAG DIKE	226.52	0.0052	209.74	USACE/DNREC
OT-7	STABILIZED RIPRAP OUTFALL	25.00	0.0006	1.39	USACE/DNREC
TOTAL TEMPORARY OPEN WATER IMPACTS		2906.81	0.0668	866.82	USACE/DNREC

PERMANENT OPEN WATER IMPACT AREA SCHEDULE

ID	IMPACT DESCRIPTION	AREA (SF)	AREA (AC)	VOLUME (CY)	JURISDICTION
O-1	UPSTREAM RIPRAP	554.52	0.0127	30.81	USACE/DNREC
O-2	DOWNSTREAM RIPRAP	376.45	0.0086	20.91	USACE/DNREC
TOTAL PERMANENT OPEN WATER IMPACTS		930.97	0.0213	51.72	USACE/DNREC

OPEN WATER CREATION AREA SCHEDULE

ID	IMPACT DESCRIPTION	AREA (SF)	AREA (AC)	VOLUME (CY)	JURISDICTION
OC-1	UPSTREAM CREATION	260.64	0.0060	14.48	USACE/DNREC
OC-2	STRUCTURE CREATION	761.62	0.0175	42.31	USACE/DNREC
OC-3	DOWNSTREAM CREATION	418.68	0.0096	23.26	USACE/DNREC
TOTAL OPEN WATER CREATION AREAS		1440.94	0.0331	80.05	USACE/DNREC

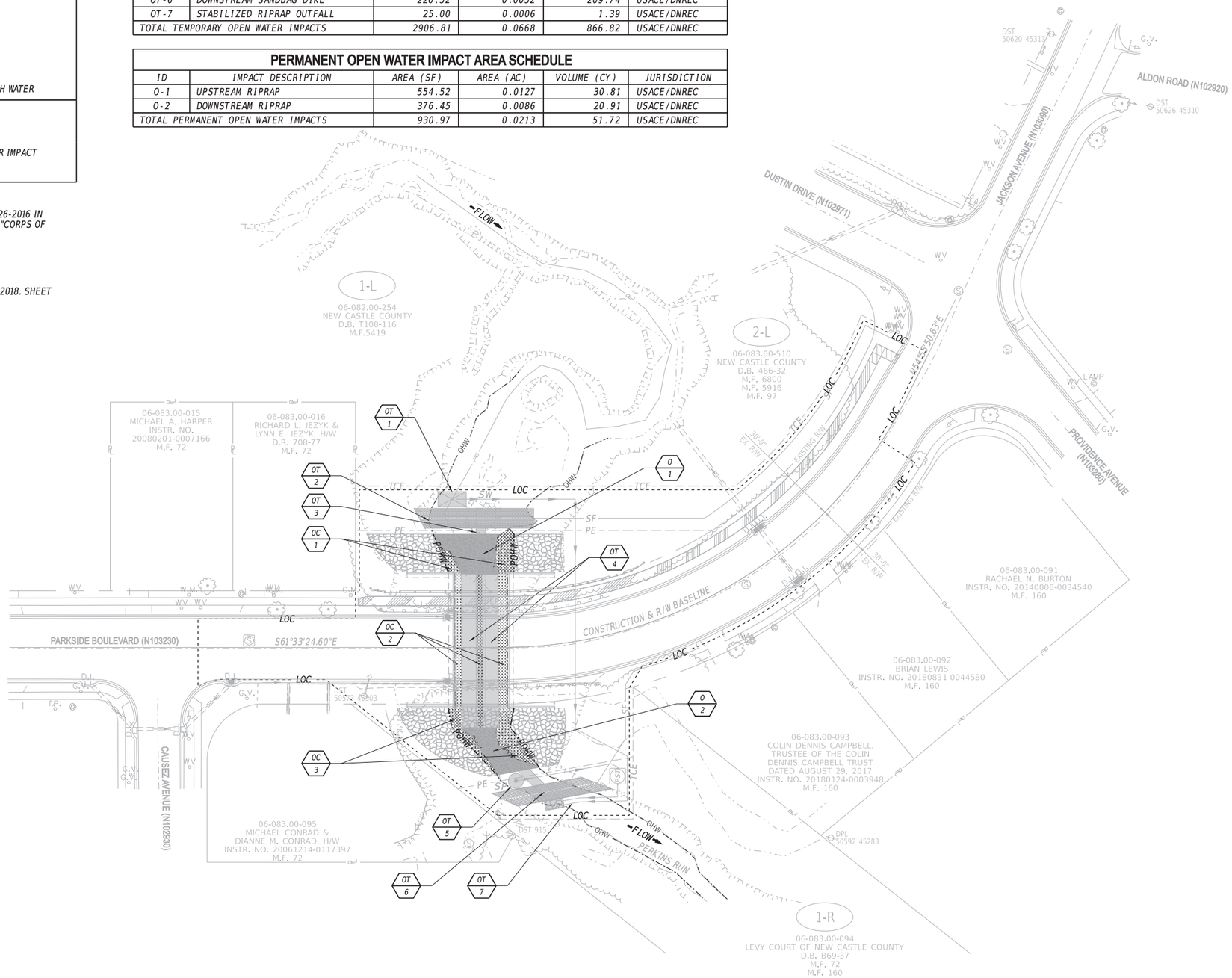

ADDENDA / REVISIONS	

SCALE 0 30 60 90 FEET

BR 1-065 ON PARKSIDE BOULEVARD OVER PERKINS RUN

CONTRACT	BRIDGE NO.	1-065
T201707105	DESIGNED BY:	SWW
COUNTY		
NEW CASTLE	CHECKED BY:	SMW

ENVIRONMENTAL COMPLIANCE PLAN

EC-02
SECTION
BR
SHEET NO.
15

4-NOV-2019
13:48
Y:\NEWCASTLL\1032230\Bridge\T201707105\500_CADD\530_PLANS_DGN\CP.dgn

PORTABLE CHANGEABLE MESSAGE SIGNS

PRIOR TO DETOUR
(10 DAYS PRIOR TO BEGINNING OF DETOUR)

PCMS-1

PARKSIDE BLVD TO CLOSE	STARTING XX/XX/XX

DURING DETOUR
(DISPLAY FOR 5 DAYS AFTER IMPLEMENTATION OF DETOUR)

PCMS-1

PARKSIDE BLVD CLOSED	FOLLOW DETOUR

SPECIAL SIGNS

48" × 78"

Parkside	6"C
Blvd	6"C
CLOSED	6"C
WEST OF	6"C
Providence	6"C
Ave	6"C
STARTING	6"C
XX/XX/XX	6"C

(Y)

48" × 78"

Parkside	6"C
Blvd	6"C
CLOSED	6"C
WEST OF	6"C
Providence	6"C
Ave	6"C
FOLLOW	6"C
DETOUR	6"C

(Z)

D/G RETROREFLECTIVE ORANGE BACKGROUND; BLACK LEGEND
- DISPLAY (Y) AT CLOSURE POINTS 10 DAYS PRIOR TO IMPLEMENTATION OF CLOSURE
- REMOVE UPON IMPLEMENTATION OF DETOUR

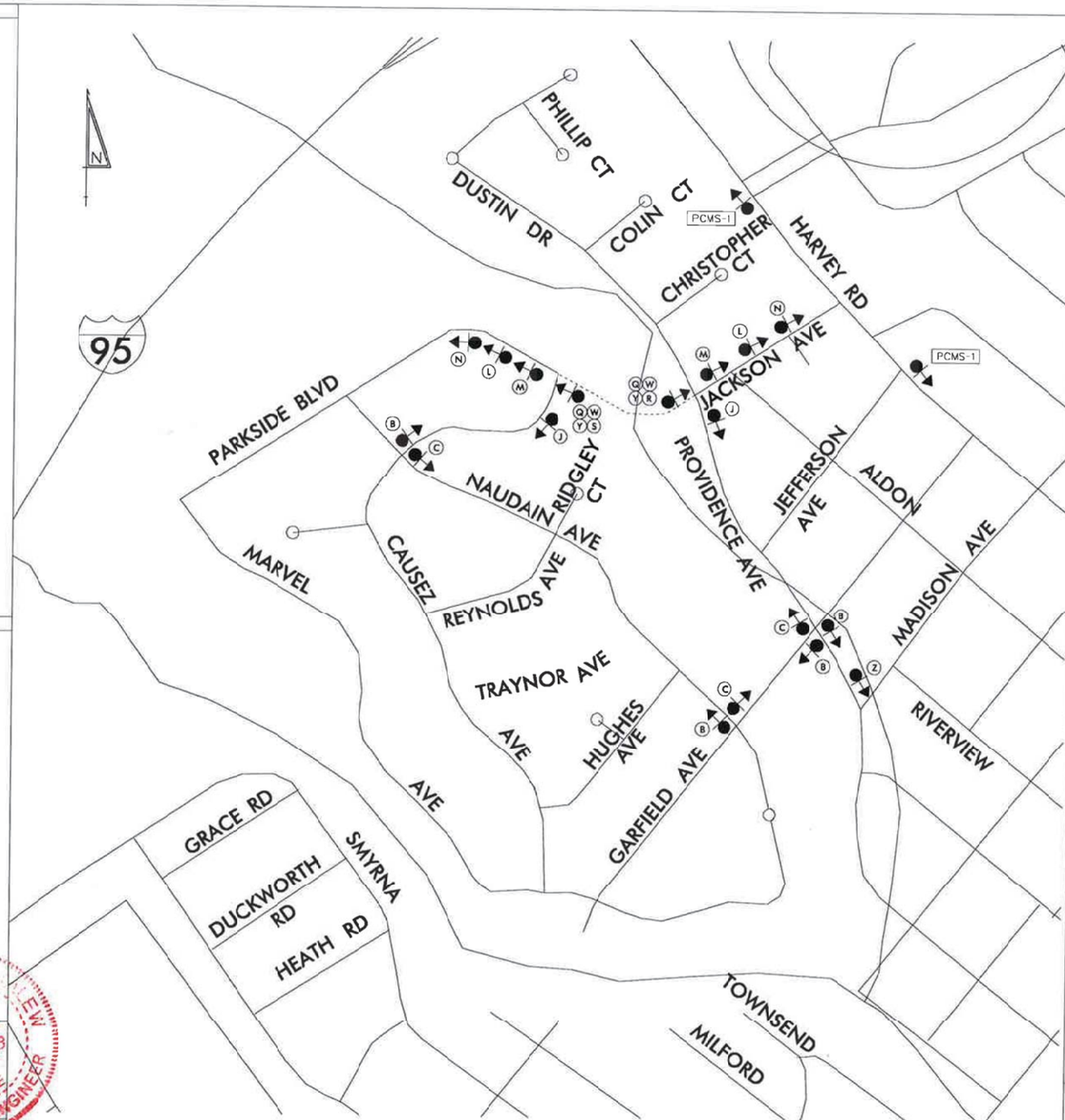

LEGEND

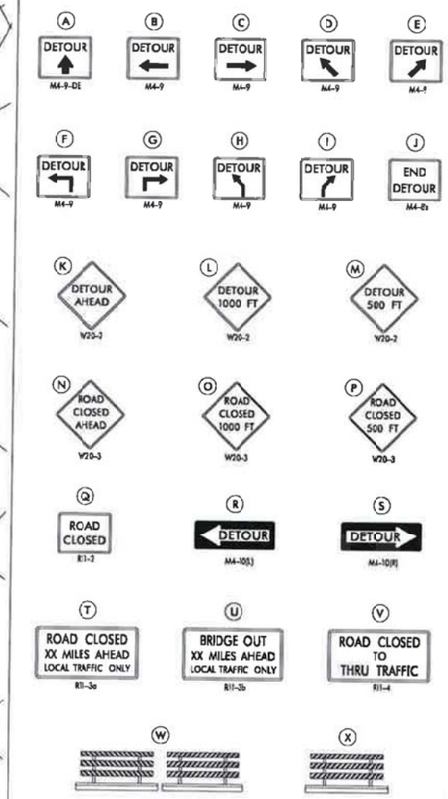

GENERAL NOTES

1. ALL TEMPORARY TRAFFIC CONTROL DEVICES ARE TO BE SUPPLIED AND MAINTAINED BY THE GENERAL CONTRACTOR AND SHALL BE IN COMPLIANCE WITH THIS PLAN AND THE DELAWARE MANUAL ON UNIFORM TRAFFIC CONTROL DEVICES (DE MUTCD) LATEST EDITION.
2. SIGNS "N" THROUGH "O" AND "T" AND "V", THE WORD "ROAD" SHALL BE CHANGED TO "RAMP", "RR XING" OR "BRIDGE" WHERE APPLICABLE.
3. "W" TYPE 3 BARRICADES AT A ROAD CLOSURE SHALL BE PLACED COMPLETELY ACROSS THE ROADWAY, FROM CURB TO CURB, OR FROM EDGE OF ROAD TO EDGE OF ROAD, WITH THE STRIPES POSITIONED DOWNWARD TOWARD THE CENTER OF THE ROADWAY.
4. BARRICADES SHALL BE A MINIMUM OF 6 FEET WIDE UNLESS DIRECTED BY THE ENGINEER.

CONCURRENCE FOR IMPLEMENTATION

Emil Zumonza — TRAFFIC SAFETY — 2/20/19 DATE

PREPARED BY
DELDOT - TRANSPORTATION SOLUTIONS
TRAFFIC SAFETY

THIS SEAL APPLIES TO ALL SHEETS BEARING THE "TS" SECTION DESIGNATION.

2/22/19 DATE

MARK S. RIDDLE — LICENSED PROFESSIONAL ENGINEER — No. 16738 — DELAWARE — SEAL

ADDENDA / REVISIONS

NOT TO SCALE

BR 1-065 ON PARKSIDE BOULEVARD OVER PERKINS RUN

CONTRACT	PERMIT NO.	X
T201707105	DESIGNED BY:	EM
COUNTY		
NC	CHECKED BY:	NB

VEHICULAR DETOUR PLAN
BR 1-065 ON PARKSIDE BLVD

SECTION
TS
SHEET NO.
X

STILES

UTILITY TEST HOLE SCHEDULE

NO.	UTILITY	STATION	OFFSET	GROUND EL.	COVER	O.D. & MATERIAL
TH-1	GAS	12+70.42	13.84	120.06	2.52	4" PLASTIC
TH-2	GAS	12+25.27	14.23	122.14	3.14	4" PLASTIC
TH-3	WATER	12+25.36	-20.09	121.58	3.38	6" CAST IRON
TH-4	WATER	12+24.88	-21.15	123.07	2.26	8" DUCTILE IRON
TH-5	WATER	12+63.28	-22.07	120.23	2.72	8" DUCTILE IRON
TH-6	WATER	12+63.31	-19.66	119.80	3.25	6" CAST IRON

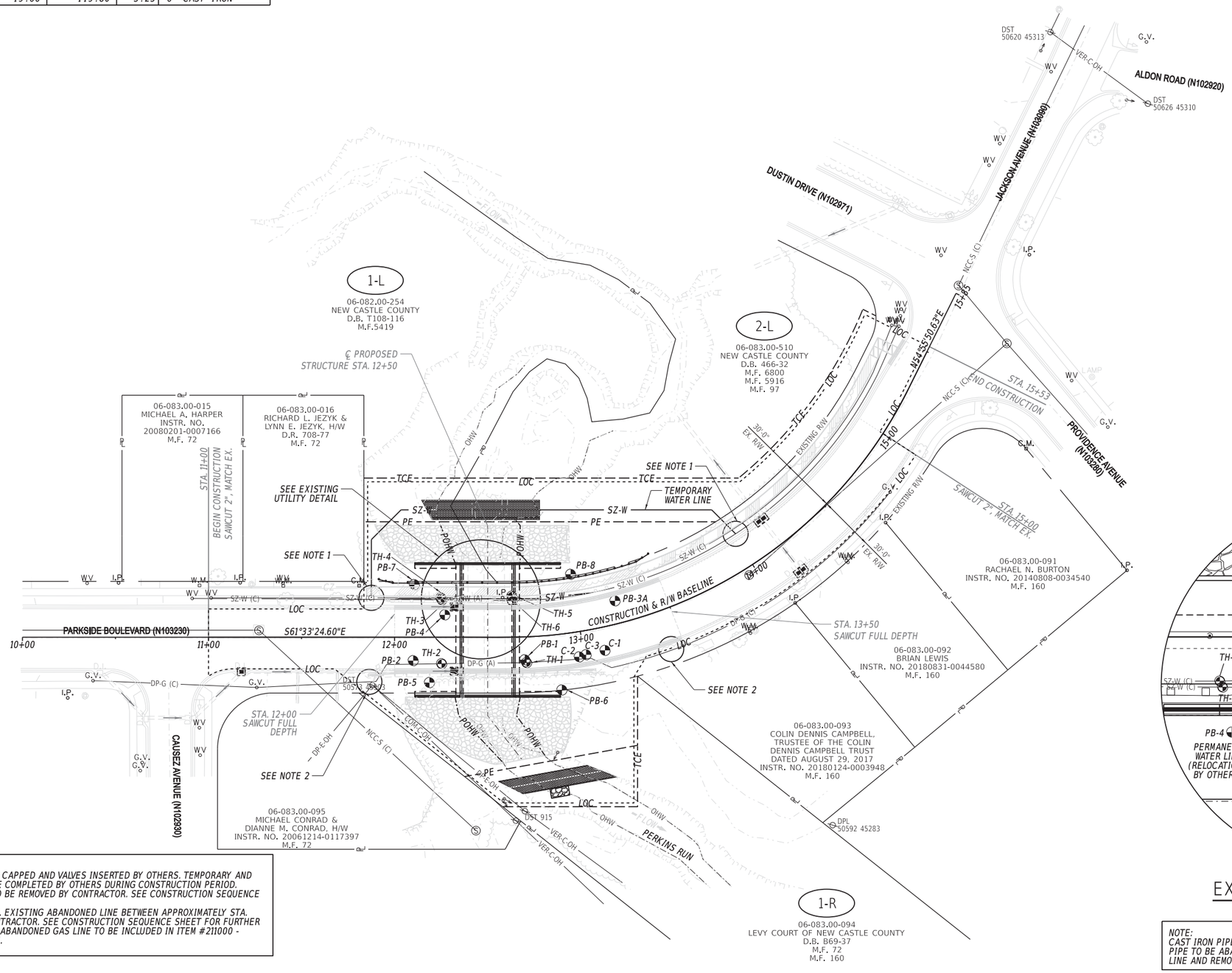

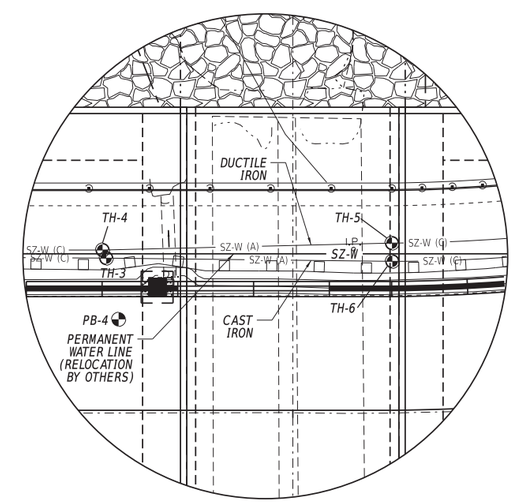

EXISTING UTILITY DETAIL

1" = 10'-0"

NOTES:
1. APPROXIMATE LOCATION OF WATER LINE TO BE CAPPED AND VALVES INSERTED BY OTHERS. TEMPORARY AND PERMANENT RELOCATION OF WATER LINE TO BE COMPLETED BY OTHERS DURING CONSTRUCTION PERIOD. EXISTING PIPES BETWEEN PROPOSED CAPS TO BE REMOVED BY CONTRACTOR. SEE CONSTRUCTION SEQUENCE SHEET FOR FURTHER DETAIL.
2. APPROXIMATE LOCATION OF CAPPED GAS LINE. EXISTING ABANDONED LINE BETWEEN APPROXIMATELY STA. 11+90 AND STA. 13+40 TO BE REMOVED BY CONTRACTOR. SEE CONSTRUCTION SEQUENCE SHEET FOR FURTHER DETAIL. PAYMENT FOR REMOVAL/DISPOSAL OF ABANDONED GAS LINE TO BE INCLUDED IN ITEM #211000 - REMOVAL OF STRUCTURES AND OBSTRUCTIONS.

NOTE:
CAST IRON PIPE ABANDONED AND TO BE REMOVED BY CONTRACTOR. DUCTILE IRON PIPE TO BE ABANDONED UPON COMPLETION OF INSTALLATION OF TEMPORARY WATER LINE AND REMOVED BY CONTRACTOR.

ADDENDA / REVISIONS

SCALE 0 30 60 90 FEET

BR 1-065 ON PARKSIDE BOULEVARD OVER PERKINS RUN

CONTRACT	BRIDGE NO.	1-065
T201707105	DESIGNED BY:	SWW
COUNTY	CHECKED BY:	SMW
NEW CASTLE		

UTILITY RELOCATION PLAN

SECTION
BR
SHEET NO.
17

4-NOV-2019
13:48
Y:\NEWCASTL\L103230\Bridge\T201707105\500_CADD\530_PLANS_DGN\CP.dgn

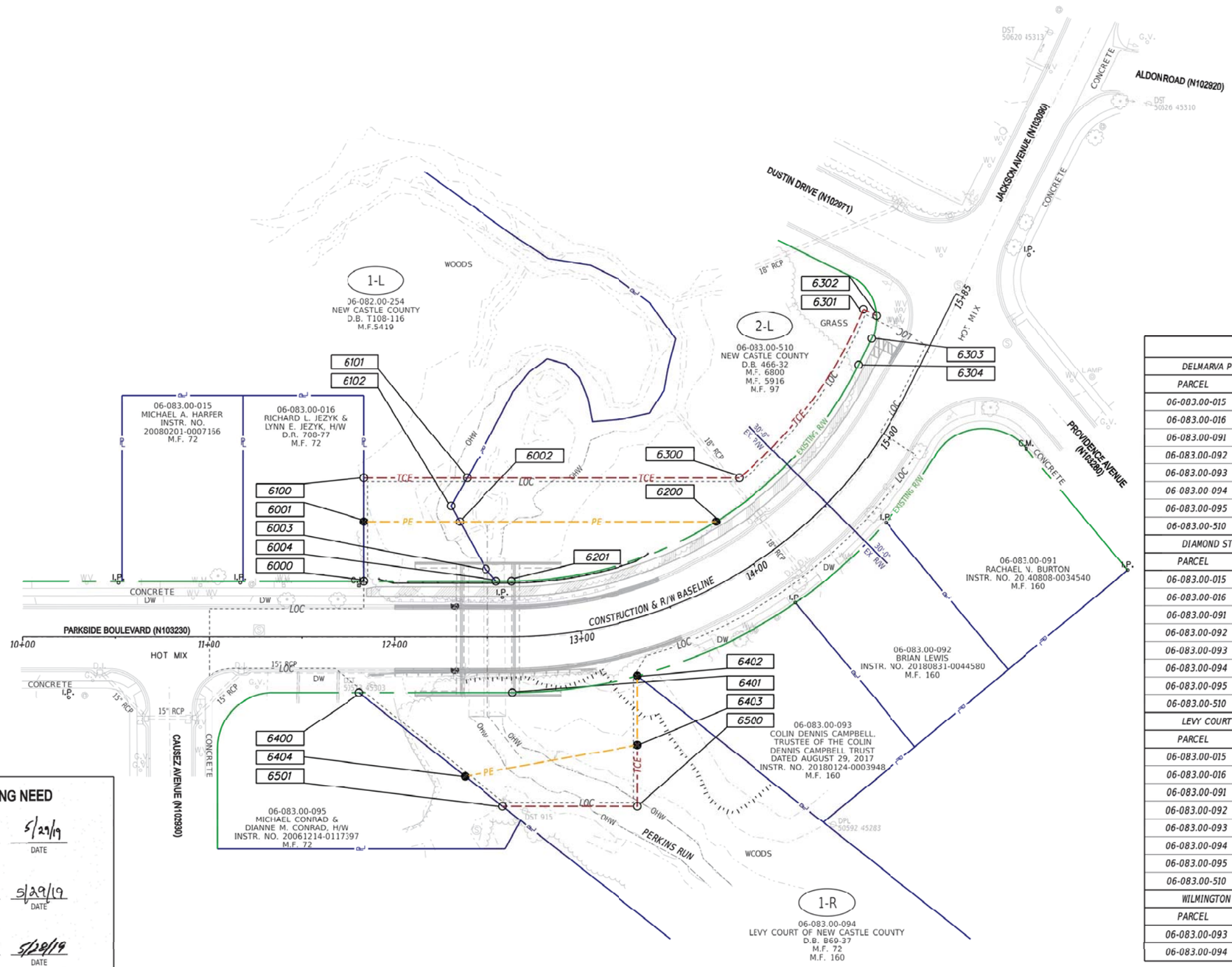

EASEMENT DATA

PARCEL	SUPPORTING DOCUMENT
DELMARVA POWER & LIGHT COMPANY BLANKET EASEMENT	
06-083.00-015	D.R. T50-470 & D.R. U50-58
06-083.00-016	D.R. T58-470 & D.R. U58-58
06-083.00-091	D.R. T58-470
06-083.00-092	D.R. T58-470
06-083.00-093	D.R. T58-470
06 083.00 094	D.R. T58 470 & D.R. U58 58
06-083.00-095	D.R. T58-470 & D.R. U58-58
06-083.00-510	D.R. W115-176
DIAMOND STATE TELEPHONE COMPANY BLANKET EASEMENT	
PARCEL	SUPPORTING DOCUMENT
06-083.00-015	D.R. T58-470 & D.R. U58-58
06-083.00-016	D.R. T58-470 & D.R. U58-58
06-083.00-091	D.R. T58-470
06-083.00-092	D.R. T58-470
06-083.00-093	D.R. T58-470
06-083.00-094	D.R. T58-470 & D.R. U58-58
06-083.00-095	D.R. T58-470 & D.R. U58-58
06-083.00-510	D.R. V115-105
LEVY COURT OF NEW CASTLE BLANKET SEWER EASEMENT	
PARCEL	SUPPORTING DOCUMENT
06-083.00-015	D.R. P48-154 & D.R. P58-596
06-083.00-016	D.R. P48-154 & D.R. P58-596
06-083.00-091	D.R. P48-154 & D.R. P58-596
06-083.00-092	D.R. P48-154 & D.R. P58-596
06-083.00-093	D.R. P48-154 & D.R. P58-596
06-083.00-094	D.R. P48-154 & D.R. P58-596
06-083.00-095	D.R. P58-596
06-083.00-510	D.R. D88-472, D.R. D88-479, & D.R. X72-463
WILMINGTON LIGHT & POWER COMPANY BLANKET EASEMENT	
PARCEL	SUPPORTING DOCUMENT
06-083.00-093	D.R. Q33-75
06-083.00-094	D.R. Q33-75

RECOMMENDED AS TO ENGINEERING NEED

MANAGER, ROW ENGINEERING — DATE 5/29/19

PROGRAM MANAGER, TEAM SUPPORT — DATE 5/29/19

TECHNICAL REVIEWER, ~~TEAM SUPPORT~~ CENTURY ENGINEERING, INC — DATE 5/28/19

ADDENDA / REVISIONS

SCALE 0 30 60 90 FEET

BR 1-065 ON PARKSIDE BOULEVARD OVER PERKINS RUN

CONTRACT	BRIDGE NO.	1-065
T201707105	DESIGNED BY:	SWW
COUNTY		
NEW CASTLE	CHECKED BY:	SMW

RIGHT-OF-WAY SHEET 1 OF 2

RIGHT-OF-WAY PLAN

SECTION BR

SHEET NO. 18

30-MAY-2019
09:35
Y:\NEWCASTL\1103230\Bridge\T201707105\C0D\530_PLANS_DGN\CP.dgn

ASSESSMENT NUMBER	OWNERSHIP OF RECORD	TYPE OF ACQUISITION	TITLE SOURCE	PARCEL AREA (ACRES)
06-082.00-254	(1-L) NEW CASTLE COUNTY	P/E	D.B. T108-116	22.134

ALIGNMENT NUMBER & DESCRIPTION:

PT. NO.	ALIGN. NO.	STATION	OFFSET *	NORTH	EAST	BEARING	DISTANCE	CHORD BEARING	CHORD LENGTH	ARC LENGTH	RADIUS **
6000	10000	11+83.49	-30.00	655122.2227	638636.3833	N 28°26'35.40" E	32.00				
6001	10000	11+83.49	-62.00	655150.3609	638651.6249	S 61°33'24.60" E	51.32				
6002	10000	12+34.81	-62.00	655125.9191	638696.7478	S 0°36'26.14" E	29.26				
6003	10000	12+49.01	-36.42	655096.6613	638697.0579	S 12°18'24.36" E	8.48				
6004	10000	12+54.55	-30.00	655088.3782	638698.8650	N 61°33'24.60" W	71.06				
6000	10000	11+83.49	-30.00	655122.2227	638636.3833						

FIGURE PE 1-L AREA = 1932.9357 SQ. FT. (0.0444 ACRES)

ASSESSMENT NUMBER	OWNERSHIP OF RECORD	TYPE OF ACQUISITION	TITLE SOURCE	PARCEL AREA (ACRES)
06-082.00-254	(1-L) NEW CASTLE COUNTY	TCE	D.B. T108-116	22.134

ALIGNMENT NUMBER & DESCRIPTION:

PT. NO.	ALIGN. NO.	STATION	OFFSET *	NORTH	EAST	BEARING	DISTANCE	CHORD BEARING	CHORD LENGTH	ARC LENGTH	RADIUS **
6100	10000	11+83.49	-85.50	655171.0242	638662.8177	S 61°33'24.60" E	55.23				
6101	10000	12+38.72	-85.50	655144.7191	638711.3804	S 58°12'20.01" W	17.34				
6102	10000	12+30.11	-70.45	655135.5850	638696.6454	S 0°36'26.14" E	9.67				
6002	10000	12+34.81	-62.00	655125.9191	638696.7478	N 61°33'24.60" W	51.32				
6001	10000	11+83.49	-62.00	655150.3609	638651.6249	N 28°26'35.40" E	23.50				
6100	10000	11+83.49	-85.50	655171.0242	638662.8177						

FIGURE TCE 1-L AREA = 1180.2439 SQ. FT. (0.0271 ACRES)

ASSESSMENT NUMBER	OWNERSHIP OF RECORD	TYPE OF ACQUISITION	TITLE SOURCE	PARCEL AREA (ACRES)
06-083.00-510	(2-L) NEW CASTLE COUNTY	P/E	D.B. 466-32	2.680

ALIGNMENT NUMBER & DESCRIPTION:

PT. NO.	ALIGN. NO.	STATION	OFFSET *	NORTH	EAST	BEARING	DISTANCE	CHORD BEARING	CHORD LENGTH	ARC LENGTH	RADIUS **
6200	10000	13+95.38	-30.00	655060.3051	638817.8801			N 77°48'45.57" W	114.32	115.78	210.00
6201	10000	12+62.82	-30.00	655084.4389	638706.1374	N 61°33'24.60" W	8.27				
6004	10000	12+54.55	-30.00	655088.3782	638698.8650	N 12°18'24.36" W	8.48				
6003	10000	12+49.01	-36.42	655096.6613	638697.0579	N 0°36'26.14" W	29.26				
6002	10000	12+34.81	-62.00	655125.9191	638696.7478	S 61°33'24.60" E	137.76				
6200	10000	13+95.38	-30.00	655060.3051	638817.8801						

FIGURE PE 2-L AREA = 2968.3283 SQ. FT. (0.0681 ACRES)

ASSESSMENT NUMBER	OWNERSHIP OF RECORD	TYPE OF ACQUISITION	TITLE SOURCE	PARCEL AREA (ACRES)
06-083.00-510	(2-L) NEW CASTLE COUNTY	TCE	D.B. 466-32	2.680

ALIGNMENT NUMBER & DESCRIPTION:

PT. NO.	ALIGN. NO.	STATION	OFFSET *	NORTH	EAST	BEARING	DISTANCE	CHORD BEARING	CHORD LENGTH	ARC LENGTH	RADIUS **
6300	10000	14+23.22	-42.05	655075.1005	638839.9058			N 64°48'56.82" E	112.58	114.12	-200.00
6301	10000	15+55.00	-41.00	655123.0073	638941.7859	S 35°04'09.37" E	7.87				
6302	10000	15+55.00	-33.13	655116.5624	638946.3103			S 40°27'07.06" W	12.50	12.64	25.00
6303	10000	15+42.90	-30.00	655107.0497	638938.1995	S 54°55'50.63" W	15.73				
6304	10000	15+27.17	-30.00	655098.0129	638925.3267			S 70°39'42.36" W	113.87	115.31	210.00
6200	10000	13+95.38	-30.00	655060.3051	638817.8801	N 61°33'24.60" W	137.76				
6002	10000	12+34.81	-62.00	655125.9191	638696.7478	N 0°36'26.14" W	9.67				
6102	10000	12+30.11	-70.45	655135.5850	638696.6454	N 58°12'20.01" E	17.34				
6101	10000	12+38.72	-85.50	655144.7191	638711.3804	S 61°33'24.60" E	146.17				
6300	10000	14+23.22	-42.05	655075.1005	638839.9058						

FIGURE TCE 2-L AREA = 4797.2830 SQ. FT. (0.1101 ACRES)

ASSESSMENT NUMBER	OWNERSHIP OF RECORD	TYPE OF ACQUISITION	TITLE SOURCE	PARCEL AREA (ACRES)
06-083.00-094	(1-R) LEVY COURT OF NEW CASTLE COUNTY	P/E	D.B. B69-37	2.6000

ALIGNMENT NUMBER & DESCRIPTION:

PT. NO.	ALIGN. NO.	STATION	OFFSET *	NORTH	EAST	BEARING	DISTANCE	CHORD BEARING	CHORD LENGTH	ARC LENGTH	RADIUS **
6400	10000	11+80.89	30.00	655070.7064	638605.5190	S 61°33'24.60" E	82.42				
6401	10000	12+63.06	30.00	655031.4532	638677.9858			S 69°14'35.08" E	67.91	68.09	-270.00
6402	10000	13+23.59	30.00	655007.3853	638741.4888	S 28°26'35.40" W	37.16				
6403	10000	13+16.09	66.06	654974.7084	638723.7886	N 71°48'04.07" W	94.48				
6404	10000	12+37.63	74.88	655004.2149	638634.0383	N 23°12'54.95" W	72.35				
6400	10000	11+80.89	30.00	655070.7064	638605.5190						

FIGURE PE 1-R AREA = 4873.5826 SQ. FT. (0.1119 ACRES)

ASSESSMENT NUMBER	OWNERSHIP OF RECORD	TYPE OF ACQUISITION	TITLE SOURCE	PARCEL AREA (ACRES)
06-083.00-094	(1-R) LEVY COURT OF NEW CASTLE COUNTY	TCE	D.B. B69-37	2.6000

ALIGNMENT NUMBER & DESCRIPTION:

PT. NO.	ALIGN. NO.	STATION	OFFSET *	NORTH	EAST	BEARING	DISTANCE	CHORD BEARING	CHORD LENGTH	ARC LENGTH	RADIUS **
6500	10000	13+10.78	98.24	654945.7275	638708.0905	N 61°33'24.60" W	72.54				
6501	10000	12+58.06	91.04	654980.2784	638644.3050	N 23°12'54.95" W	26.05				
6404	10000	12+37.63	74.88	655004.2149	638634.0383	S 71°48'04.07" E	94.48				
6403	10000	13+16.09	66.06	654974.7084	638723.7886	S 28°26'35.40" W	32.96				
6500	10000	13+10.78	98.24	654945.7275	638708.0905						

FIGURE TCE 1-R AREA = 2118.1584 SQ. FT. (0.0486 ACRES)

COUNTY ASSESSMENT PARCEL NUMBER	PLAN SHEET NUMBER	OWNERSHIP OF RECORD	TITLE SOURCE	PROPERTY AREA BEFORE ACQUISITION (ACRE) D=DEED C=CALCULATED A=ASSESMENT	ACQUISITION CODE FEE, R/W, P/E, TCE	AREA TO BE ACQUIRED: ACQUISITION (SQ. FEET/ACRES)	AREA TO BE ACQUIRED: AREA OCCUPIED BY EXISTING RIGHT OF WAY (SQ. FEET/ACRES)	AREA TO BE ACQUIRED: EASEMENT: PERMANENT (SQ. FEET/ACRES)	AREA TO BE ACQUIRED: EASEMENT: TEMPORARY (SQ. FEET/ACRES)	PROPERTY AREA REMAINING (SQ. FEET/ACRES)	DEED RECORD OF ACQUISTITION	REMARKS
06-082.00-254	8	(1-L) NEW CASTLE COUNTY	D.B. T108-116	D - 22.1343	P/E			1932.9357 / 0.04				
					TCE				1180.2439 / 0.03	964170.1080 / 22.13		
06-083.00-510	8	(2-L) NEW CASTLE COUNTY	D.B. 466-32	D - 2.68	P/E			2968.3283 / 0.07				PE = 2968.3283 & TCE = 4797.283 SF DP&L EASEMENT PER D.R. W115-176
					TCE				4797.283 / 0.11	116740.80 / 2.68		PE = 2968.3283 & TCE = 4797.283 SF DST EASEMENT PER D.R. V115-105
												PE = 2968.3283 & TCE = 4797.283 SF LCNC EASEMENT
												PER D.R. D88-472, D.R. D88-479, & D.R. X72-463
06-083.00-094	8	(1-R) LEVY COURT OF NEW CASTLE COUNTY	D.B. B69-37	A - 2.60	P/E			4873.5826 / 0.11				PE = 4873.5826 & TCE = 2118.1584 SF DP&L EASEMENT
					TCE				2118.1584 / 0.05	113256.00 / 2.60		PER D.R. T58-470 & D.R. U58-58
												PE = 4873.5826 & TCE = 2118.1584 SF DST EASEMENT
												PER D.R. T58-470 & D.R. U58-58
												PE = 4873.5826 & TCE = 2118.1584 SF LCNC EASEMENT
												PER D.R. P48-154 & D.R. P58-596
												PE = 4873.5826 & TCE = 2118.1584 SF WL&P EASEMENT PER D.R. Q33-75

ABBREVIATIONS

DP&L	DELMARVA POWER & LIGHT COMPANY
DST	DIAMOND STATE TELEPHONE COMPANY
LCNC	LEVY COURT OF NEW CASTLE
WL&P	WILMINGTON LIGHT & POWER COMPANY

LEGEND

FEE	AREA OF ACQUISITION
R/W	AREA OCCUPIED BY EXISTING R/W
P/E	PERMANENT EASEMENT
TCE	TEMPORARY CONSTRUCTION EASEMENT
*	" - " OFFSET IS LEFT OF BASELINE
**	" - " CURVE TURNS TO THE LEFT

ACQUISITION CODES

FEE - ACQUISITION
R/ W - AREA OCCUPIED BY EXISTING R/ W
P/E – PERMANENT EASEMENT
TCE – TEMPORARY EASEMENT

RIGHT-OF-WAY SHEET 2 OF 2

ADDENDA / REVISIONS

NOT TO SCALE

BR 1-065 ON
PARKSIDE BOULEVARD
OVER PERKINS RUN

CONTRACT	BRIDGE NO.	1-065
T201707105	DESIGNED BY:	SWW
COUNTY		
NEW CASTLE	CHECKED BY:	SMW

RIGHT-OF-WAY
DATA AND
TABULATION SHEET

SECTION: BR
SHEET NO. 19

4-NOV-2019
13:48
Y:\NEWCASTL\103230\Bridge\T201707105\500_CADD\530_PLANS_DGN\RB01.dgn