SCALE : N.T.S.

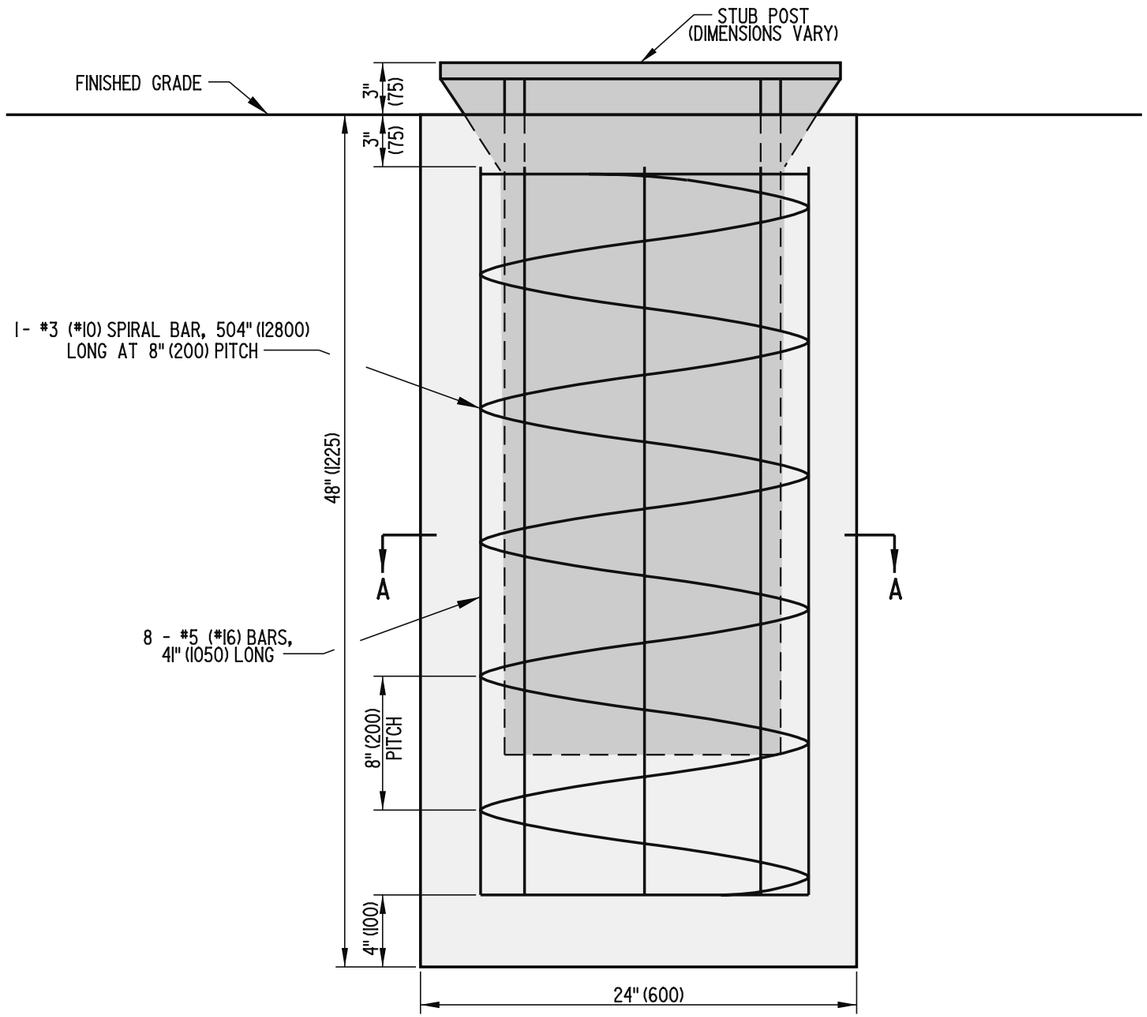

NOTES: 1). STUB POST TO BE SUPPLIED BY THE DEPARTMENTS TRAFFIC, ENGINEERING, AND MANAGEMENT SECTION.

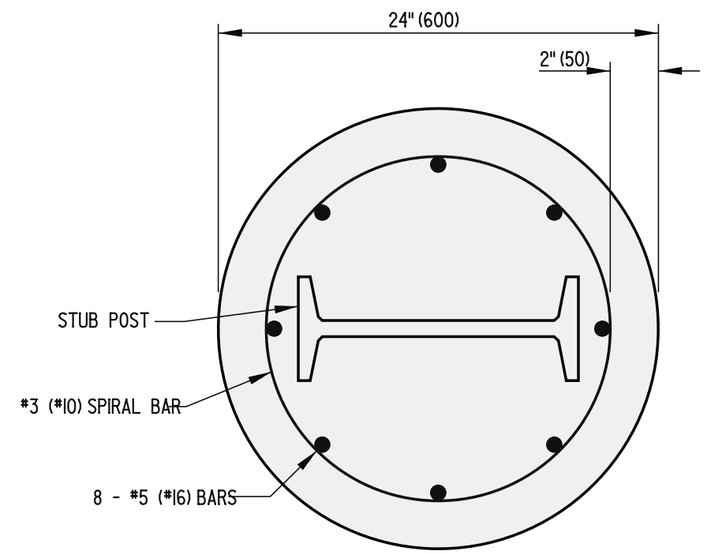

SECTION A-A

DELAWARE DEPARTMENT OF TRANSPORTATION	SIGN FOUNDATION		APPROVED Carolann Wicks CHIEF ENGINEER 12/5/05 DATE
	STANDARD NO. T-7 (2005)	SHT. 1 OF 1	RECOMMENDED James M. Ojdrna DESIGN ENGINEER 11/29/05 DATE

09/09/2005