SCALE : N.T.S.

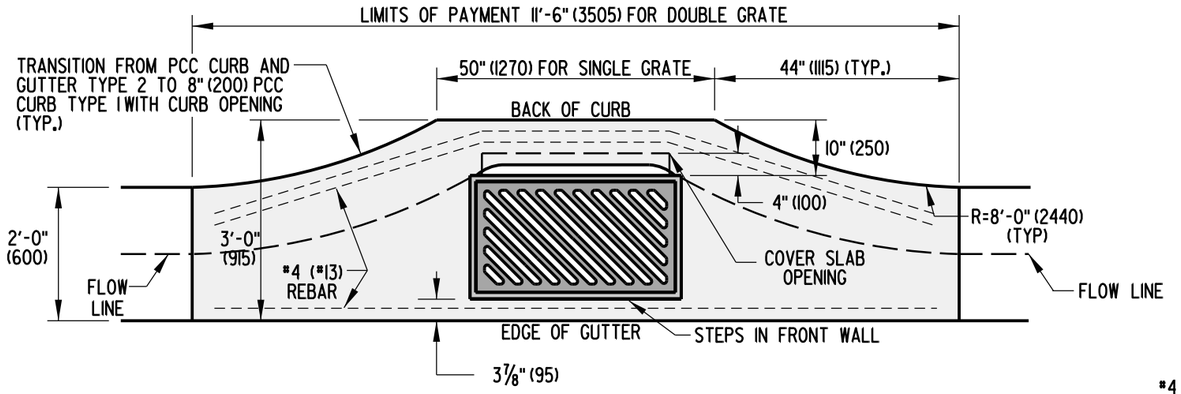

SINGLE GRATE SETUP

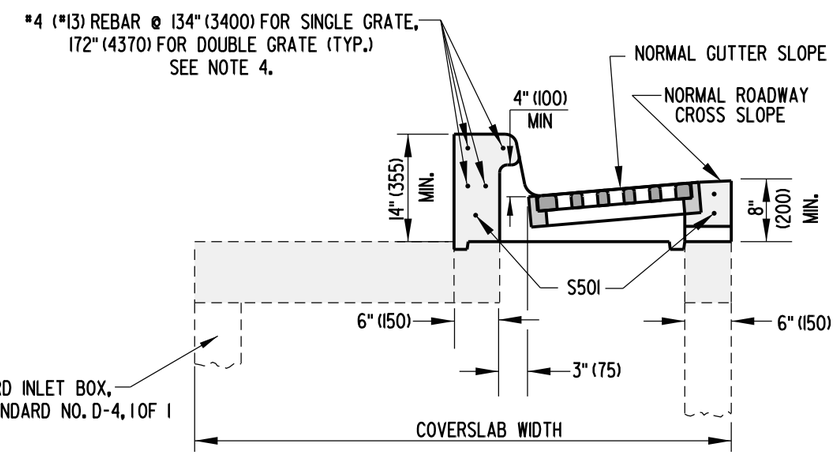

SUBDIVISION TOP & CONFIGURATION

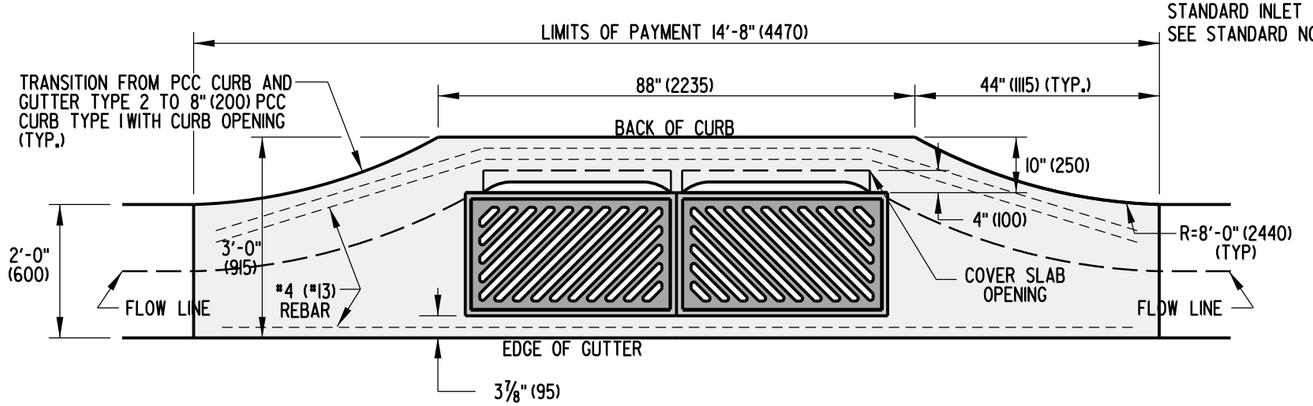

DOUBLE GRATE SETUP

NOTES:

1). MINIMUM BOX SIZE TO BE 34" (850) X 24" (600).
2). PIPE OPENINGS IN THE FRONT WALL SHALL NOT INTERFERE WITH THE STEPS. THE PIPE SHALL BE SHIFTED HORIZONTALLY TO AVOID THE STEPS. IT MAY BE NECESSARY TO USE A LARGER BOX TO AVOID CONFLICT BETWEEN STEPS AND PIPE OPENING.
3). SEE DETAIL D-5, SHEET 3 OF 9, FOR S501 BAR DIAGRAM.
4). THE REBAR IN THE HEAD IS PREFERRED TO BE 1 CONTINUOUS PIECE, HOWEVER, IF MULTIPLE PIECES ARE TO BE USED, EACH PIECE SHALL OVERLAP BY 12" (300) MINIMUM AND THE FINAL LENGTH OF THE SPLICED REBAR SHALL BE AS NOTED ON THIS DETAIL.

DELAWARE DEPARTMENT OF TRANSPORTATION	DRAINAGE INLET TOP UNIT, TYPE S		APPROVED — SIGNATURE ON FILE (CHIEF ENGINEER) — 01/19/2010 (DATE)
	STANDARD NO. D-5 (2009)	SHT. 8 OF 8	RECOMMENDED — SIGNATURE ON FILE (DESIGN ENGINEER) — 01/14/2010 (DATE)

12/01/2009