SCALE : N.T.S.

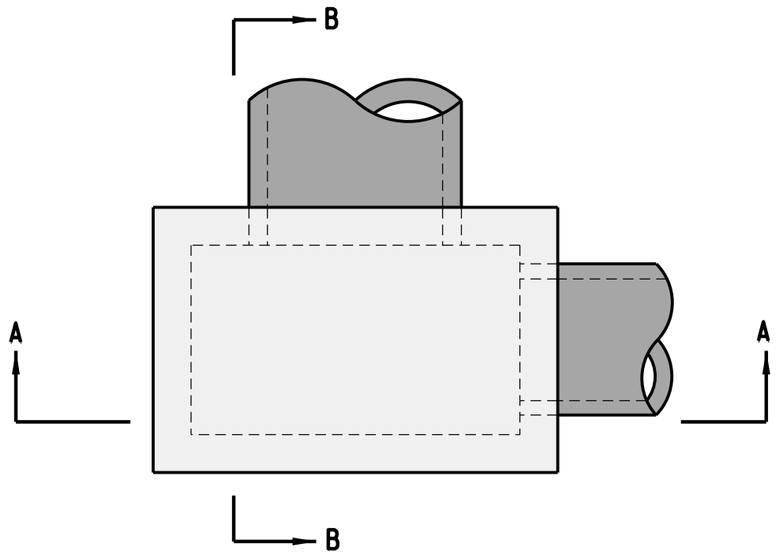

PLAN

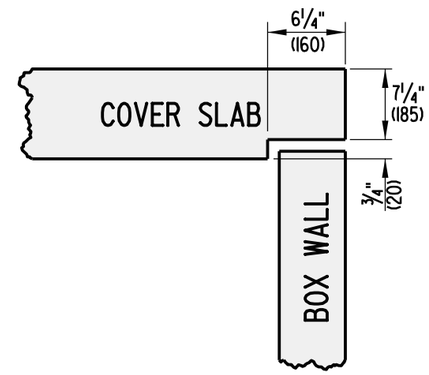

TYPE 3 JOINT DETAIL

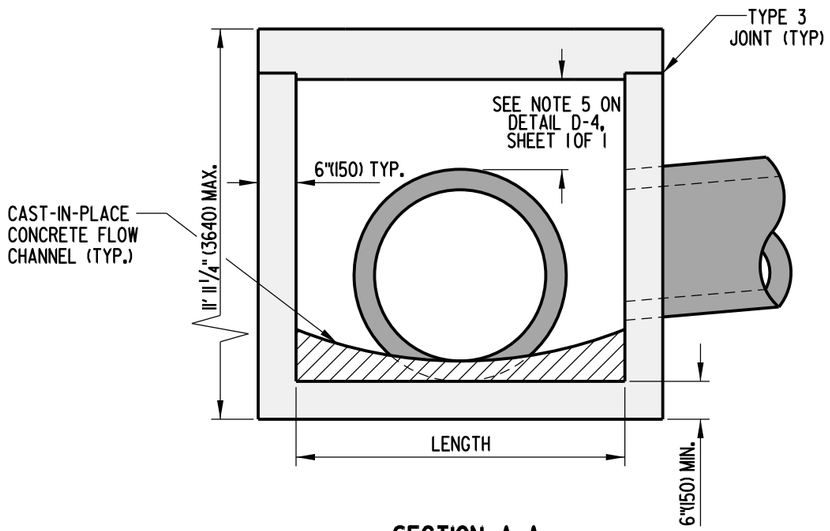

SECTION A-A

• - SEE OPTIONAL PIPE OPENING DETAIL ON STANDARD NO. D-4, SHEET 1 OF 1.

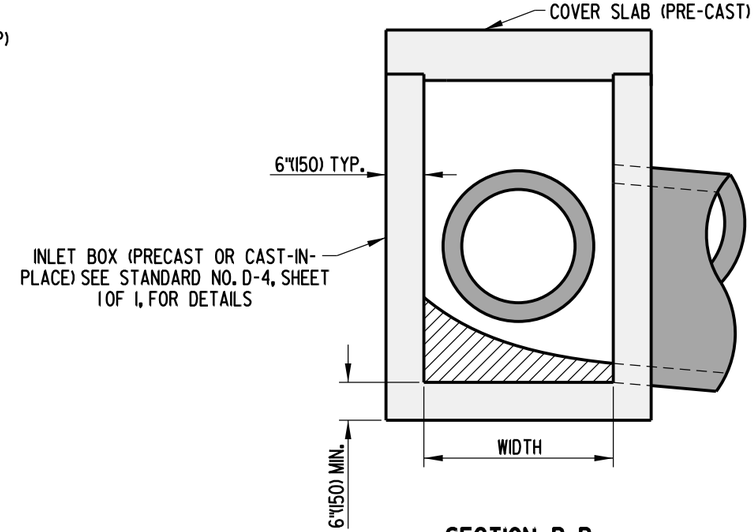

SECTION B-B

JUNCTION BOX ASSEMBLY

DELAWARE DEPARTMENT OF TRANSPORTATION	JUNCTION BOX DETAILS		APPROVED SIGNATURE ON FILE (CHIEF ENGINEER) 01/19/2010 (DATE)
	STANDARD NO. D-7 (2009)	SHT. 1 OF 2	RECOMMENDED SIGNATURE ON FILE (DESIGN ENGINEER) 01/14/2010 (DATE)

10/20/2009