SCALE : N.T.S.

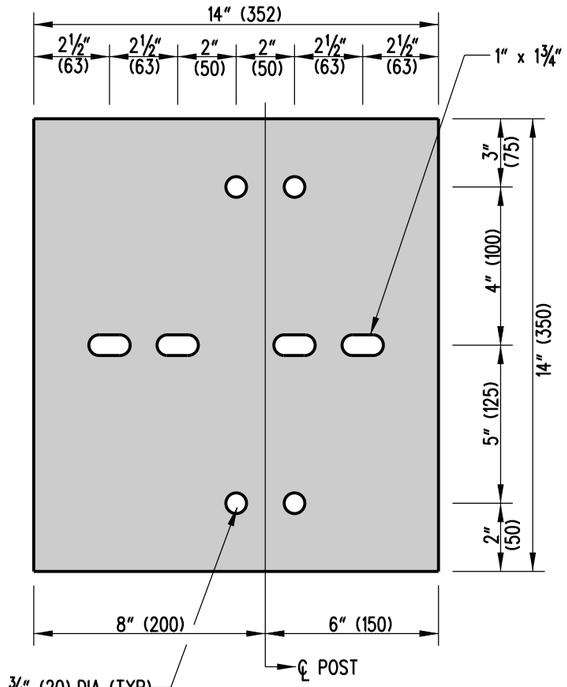

STEEL PLATE - ½" (13) THICK

GALVANIZED

NOTE: ALL HOLES TO BE DRILLED PRIOR TO GALVANIZING.

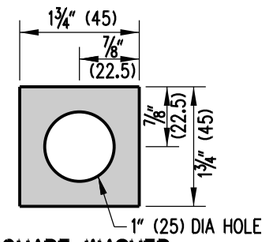

SQUARE WASHER

¼" (6) THICK - GALVANIZED

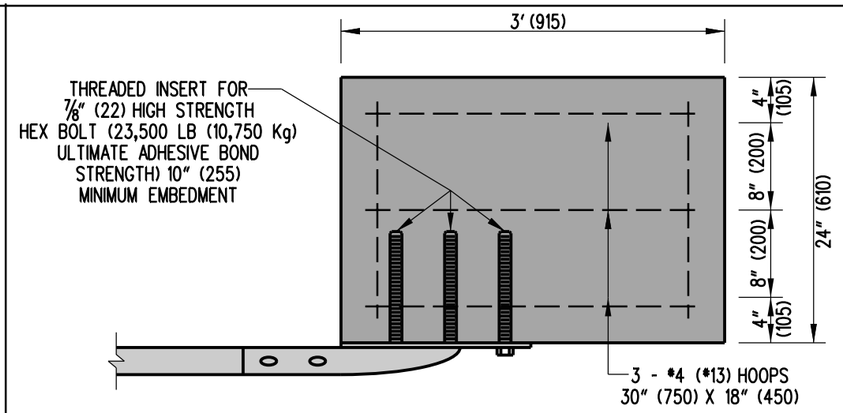

PLAN

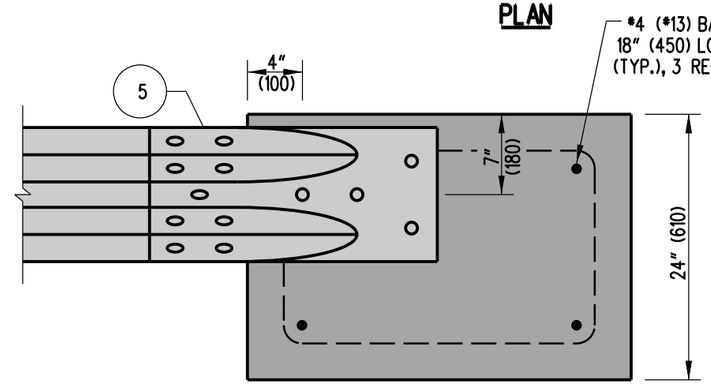

ELEVATION

CONCRETE BLOCK ANCHOR

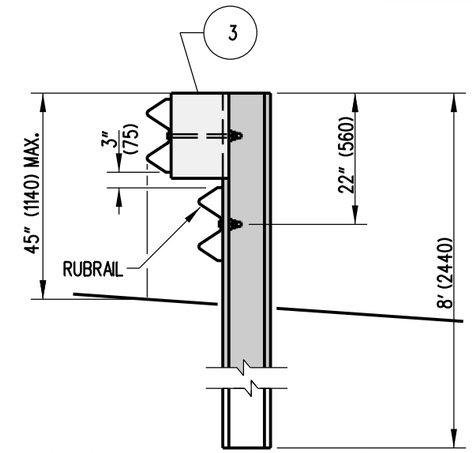

TYPICAL ELEVATION WITH RUBRAIL

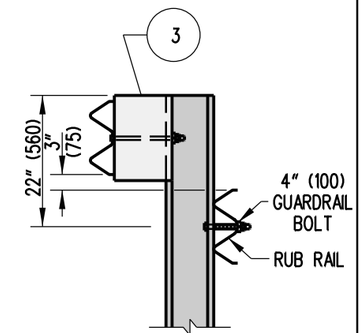

ELEVATION

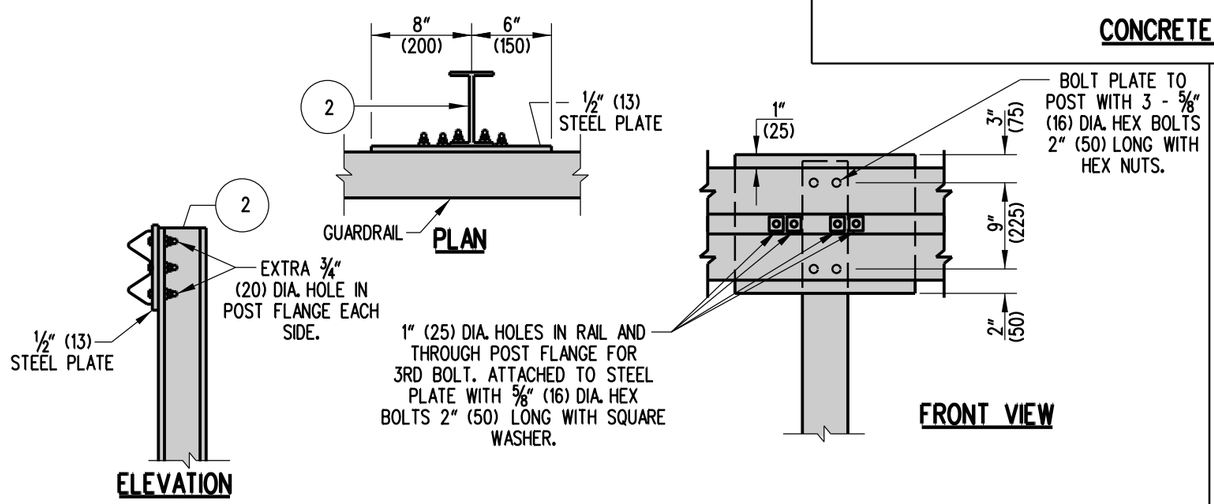

POST ANCHOR DETAIL

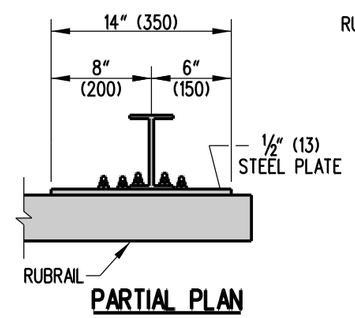

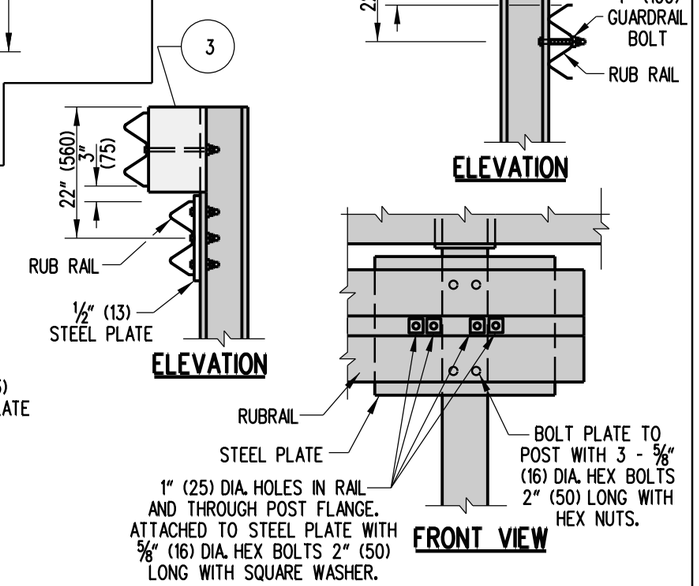

RUBRAIL ANCHOR ATTACHMENT

DELAWARE DEPARTMENT OF TRANSPORTATION	BURIED END SECTION		APPROVED SIGNATURE ON FILE (CHIEF ENGINEER) 12/28/2010 (DATE)
	STANDARD NO. B-20 (2010)	SHT. 3 OF 3	RECOMMENDED SIGNATURE ON FILE (DESIGN ENGINEER) 12/27/2010 (DATE)

12/17/2010