SCALE : NTS

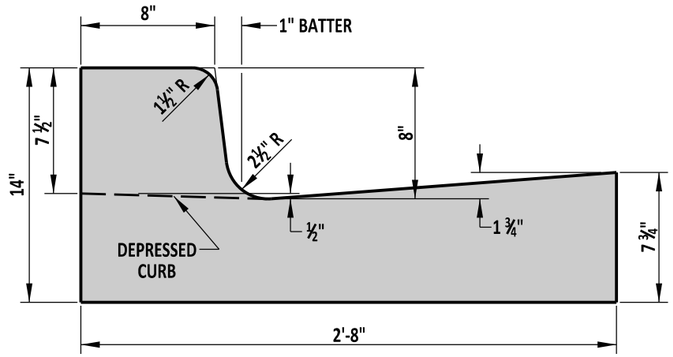

INTEGRAL P.C.C. CURB AND GUTTER
TYPE 1-8

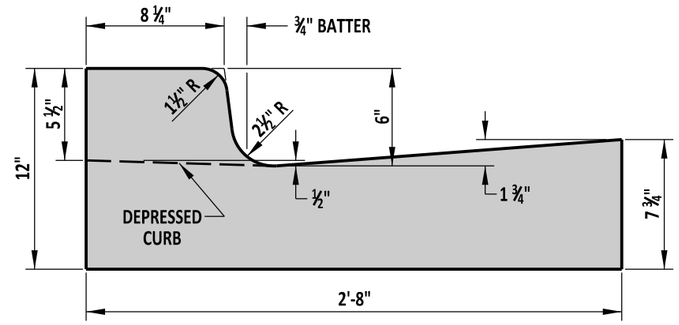

INTEGRAL P.C.C. CURB AND GUTTER
TYPE 1-6

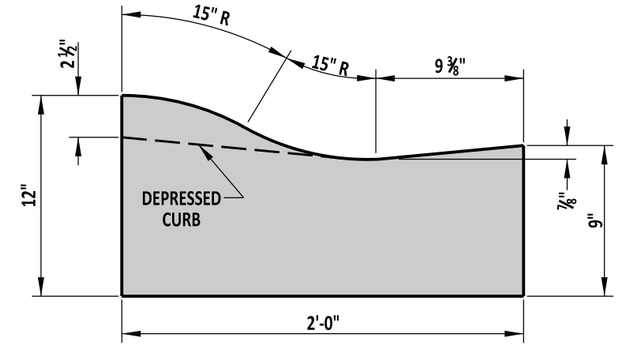

INTEGRAL P.C.C. CURB AND GUTTER
TYPE 2

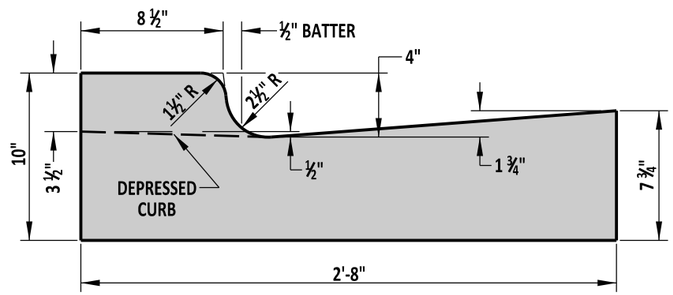

INTEGRAL P.C.C. CURB AND GUTTER
TYPE 1-4

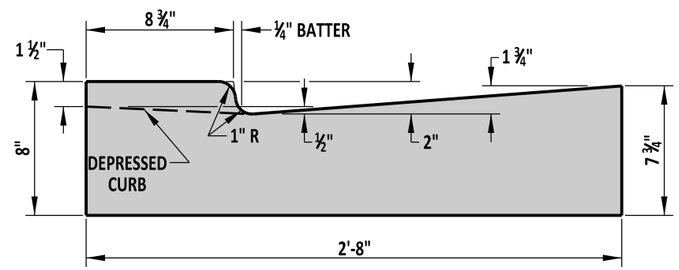

INTEGRAL P.C.C. CURB AND GUTTER
TYPE 1-2

NOTES:

1). WHEN P.C.C. CURB OR INTEGRAL P.C.C. CURB AND GUTTER IS PLACED ADJACENT TO PORTLAND CEMENT CONCRETE PAVEMENT, CONSTRUCT THE JOINT AS PER THE LONGITUDINAL JOINT SEALANT DETAIL ON DETAIL P-2, SHEET 3 OF 5. USE APPROVED JOINT FILLER TO SEAL. WORK TO BE PAID UNDER RESPECTIVE CURB AND GUTTER ITEM.

2). DEPRESS CURB AT ENTRANCES AND CURB RAMPS AS DETAILED ON THIS SHEET.

3). DEPRESS CURB FLUSH WITH PAVEMENT AT CURB RAMPS. MAXIMUM SLOPE OF CURB AT CURB RAMPS IS 20:1 IN THE DIRECTION OF PEDESTRIAN TRAVEL. SEE DETAIL C-2, SHEET 1 OF 4.

4). DEPRESS CURB FLUSH WITH PAVEMENT OR ADJACENT AREA AT LEADING EDGE OF TRIANGULAR ISLANDS, TAPERING BACK TO FULL HEIGHT AT A SLOPE OF 4:1. SEE DETAIL C-1, SHEET 1 OF 2 FOR TYPICAL SECTION OF TAPER AT NOSE OF MEDIAN ISLANDS.

5). 4" OF GABC, TYPE B SHALL BE PLACED UNDER P.C.C. CURB AND P.C.C. CURB AND GUTTER. SEE DETAIL C-1, SHEET 1 OF 2 FOR TYPICAL SECTION.

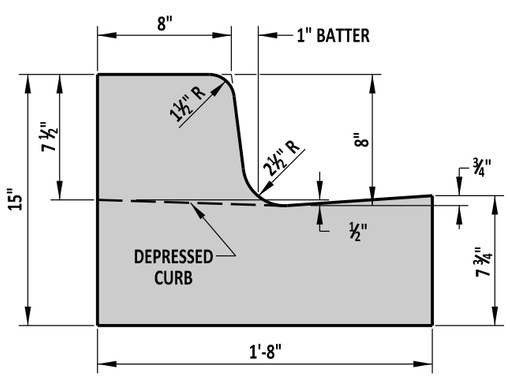

INTEGRAL P.C.C. CURB AND GUTTER
TYPE 3-8

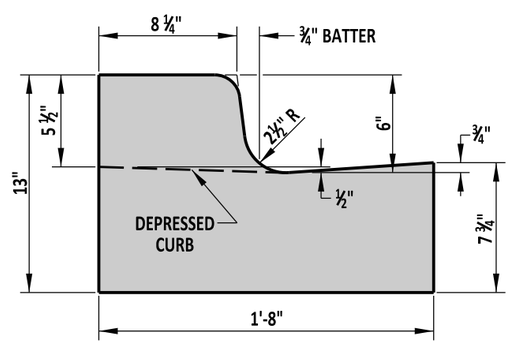

INTEGRAL P.C.C. CURB AND GUTTER
TYPE 3-6

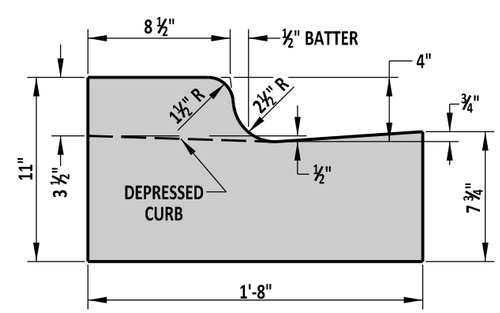

INTEGRAL P.C.C. CURB AND GUTTER
TYPE 3-4

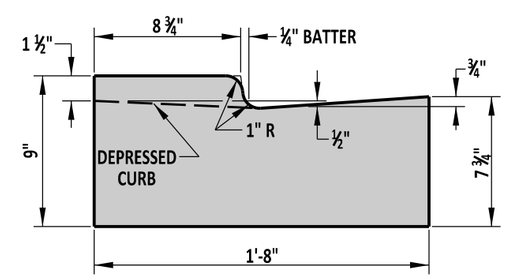

INTEGRAL P.C.C. CURB AND GUTTER
TYPE 3-2

DELAWARE DEPARTMENT OF TRANSPORTATION	INTEGRAL P.C.C. CURB & GUTTER		APPROVED	SIGNATURE ON FILE (CHIEF ENGINEER) — 02/27/2012 (DATE)
	STANDARD NO. C-1 (2011)	SHT. 2 OF 2	RECOMMENDED	SIGNATURE ON FILE (DESIGN ENGINEER) — 02/26/2012 (DATE)

2/14/2012