SCALE : NTS

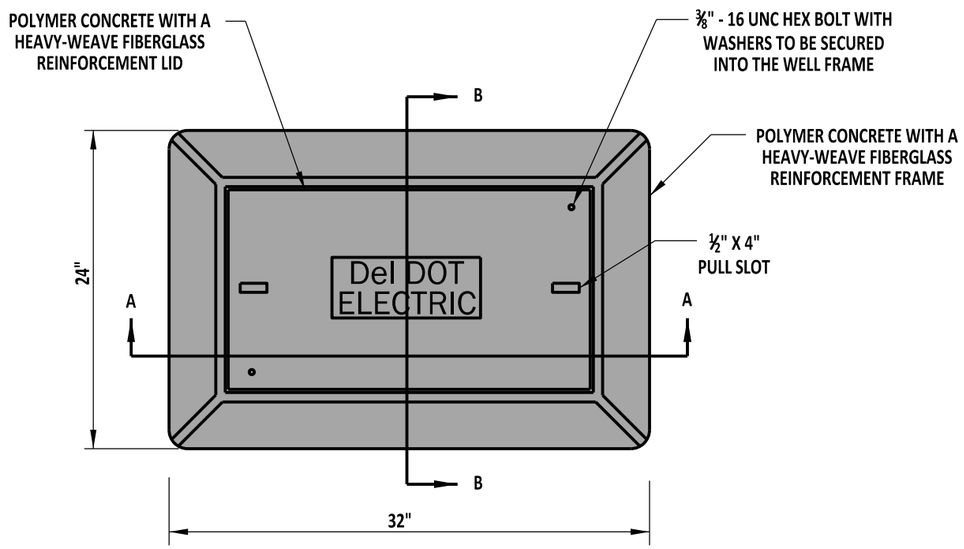

PLAN VIEW

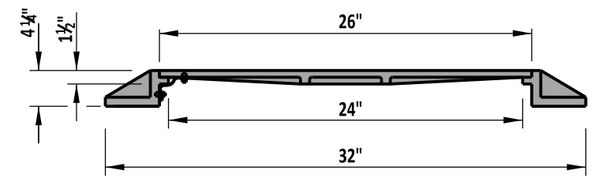

SECTION A-A

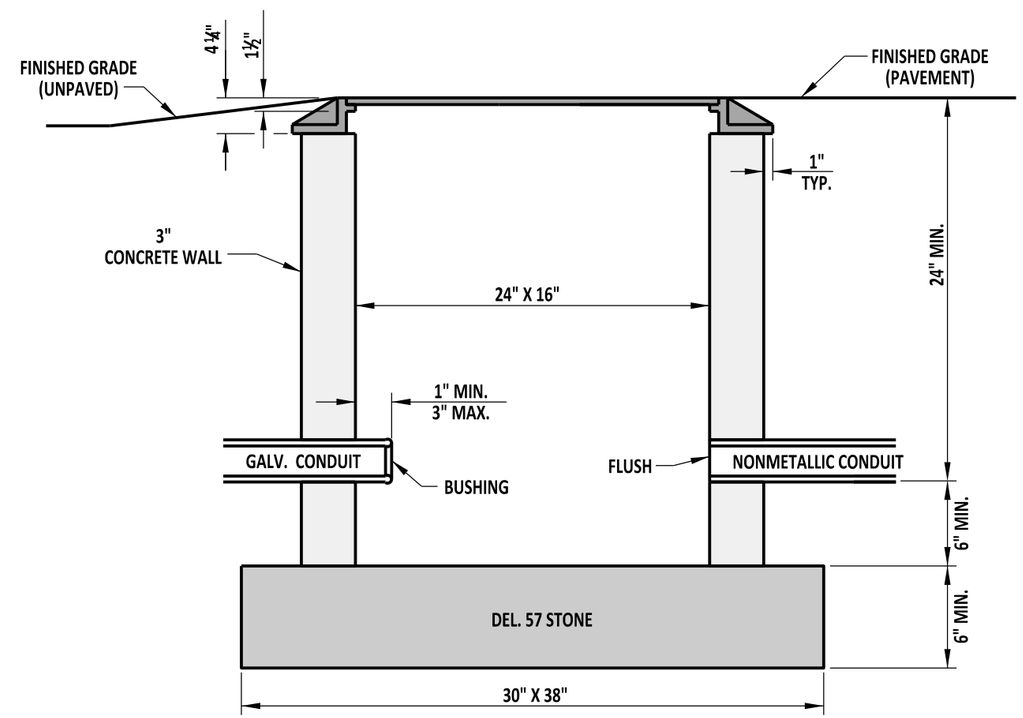

SECTION A-A

NOTES:

1). TYPE 15 CONDUIT JUNCTION WELL LID SHALL BE PRECAST POLYMER CONCRETE WITH A HEAVY-WEAVE FIBERGLASS FRAME. INSTALLED ON A PRECAST CONCRETE WELL.
2). TYPE 15 CONDUIT JUNCTION WELL BODY SHALL BE PRECAST CONCRETE. AT LEAST ONE HOLE IN PRECAST WELLS WILL BE OF A 5" DIAMETER COMPLETELY THROUGH THE WALL. UNUSED HOLES SHALL BE PLUGGED.
3). TYPE 15 CONDUIT JUNCTION WELLS SHALL BE CONSTRUCTED FLUSH WITH THE SURFACE OF THE SAME. INSTALLATION IN UNPAVED AREAS WILL BE CONSTRUCTED ABOVE GRADE AND GRADED TO DRAIN AWAY FROM THE CONDUIT JUNCTION WELL.
4). ALL CRACKS, GAPS, OR OPENINGS IN JUNCTION WELL WALL SHALL BE SEALED WITH CONCRETE.

DELAWARE DEPARTMENT OF TRANSPORTATION	CONDUIT JUNCTION WELL, TYPE 15			APPROVED	SIGNATURE ON FILE (CHIEF ENGINEER) — 12/22/2011 (DATE)
	STANDARD NO. T-3 (2011)	SHT. 3 OF 3		RECOMMENDED	SIGNATURE ON FILE (DESIGN ENGINEER) — 12/21/2011 (DATE)

10/31/2011