SCALE : NTS

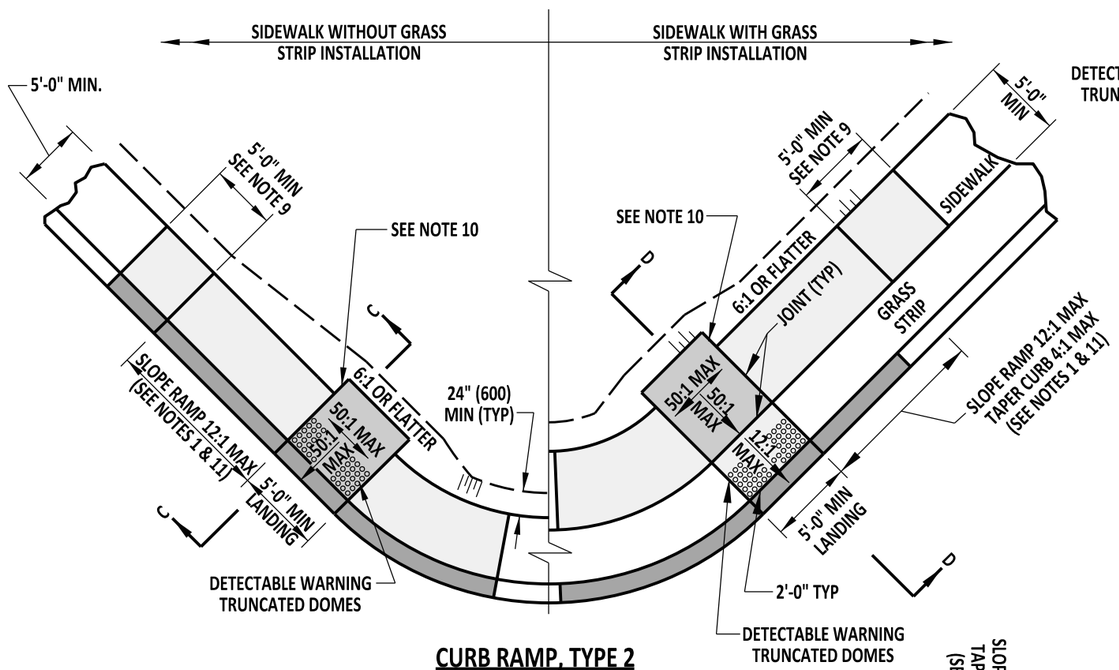

CURB RAMP, TYPE 2

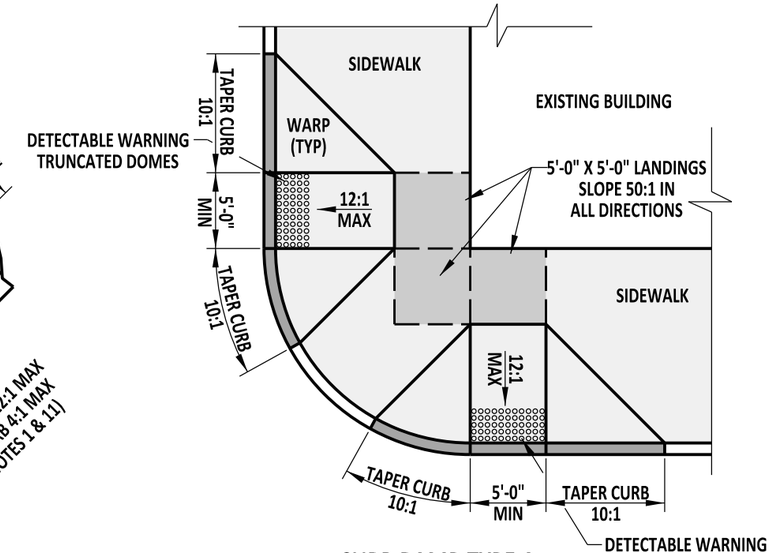

CURB RAMP,TYPE 4

** - DASHED LINES DO NOT INDICATE JOINTS

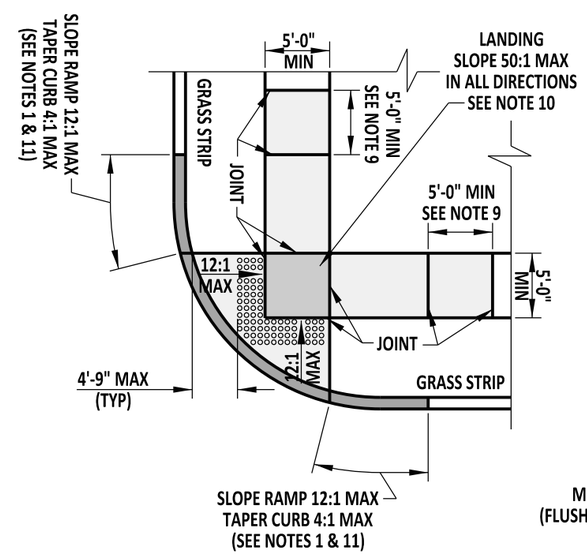

CURB RAMP, TYPE 3

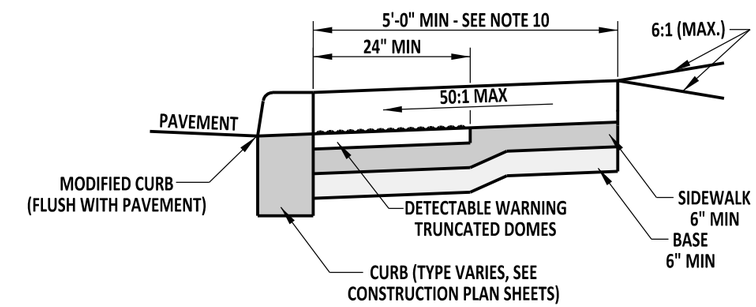

SECTION C-C

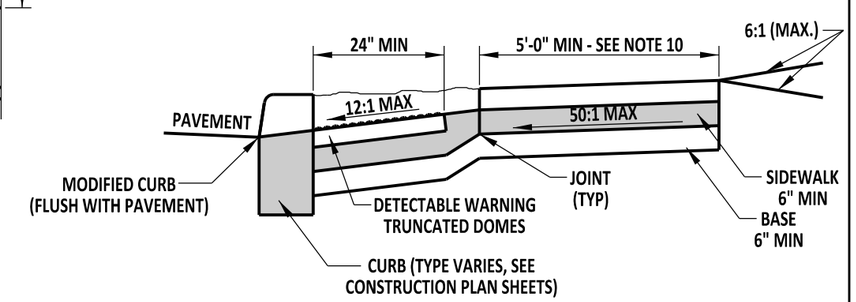

SECTION D-D

NOTES:

1). FOR ALTERATIONS WITHOUT A GRASS STRIP OR WHERE THE EXISTING ROAD PROFILE IS STEEPER THAN 7% AND A 12:1 MAXIMUM SLOPE RAMP WILL NOT MEET THE SIDEWALK GRADE WITHIN A LENGTH OF 15'-0", THE RAMP LENGTH MAY BE LIMITED TO 15'-0" AT A CONSTANT SLOPE, AND THE RAMP SLOPE ALLOWED TO EXCEED 12:1.
2). RAMP AND SIDEWALK CROSS SLOPE SHALL BE 50:1 (2%) MAXIMUM. FOR REHABILITATION WORK, THE RAMP CROSS SLOPE SHALL MATCH THE SLOPE OF THE ADJACENT ROADWAY.
3). IF GRADING WILL BE STEEPER THAN 6:1 ADJACENT TO THE CURB RAMP OR SIDEWALK, THEN A TYPE 1-8 CURB OR RETAINING WALL SHOULD BE USED TO ELIMINATE THE NEED FOR THE STEEP SLOPE.
4). ENTIRE DEPRESSED AREA OF CURB SHALL HAVE DETECTABLE WARNING TRUNCATED DOMES.
5). THE MAXIMUM DIFFERENCE IN GRADE BETWEEN THE SIDEWALK OR CURB AND THE PAVEMENT SHALL BE 13%, HOWEVER 11% IS PREFERRED. SEE STANDARD NO. C-2, SHEET 1 OF 3.
6). REFER TO DELAWARE MANUAL FOR UNIFORM TRAFFIC CONTROL DEVICES FOR DETAILS REGARDING THE LOCATION OF PEDESTRIAN PUSH BUTTONS.
7). LANDING AREA SHALL BE DELINEATED WITH JOINTS.
8). THE EDGE OF THE LANDING SHALL BE A MAXIMUM OF 10'-0" FROM THE FACE OF THE CURB.
9). FOR REHABILITATION WORK, PLACE TRANSITION SLAB TO TRANSITION FROM THE NEW RAMP TO THE EXISTING SIDEWALK WHEN THE EXISTING SIDEWALK HAS A NON-CONFORMING RUNNING SLOPE, CROSS SLOPE, OR WIDTH. ADJACENT CURB SHOULD MATCH THE SLOPE OF THE TRANSITION SLAB.
10). LANDING AREAS SHALL BE EXTENDED 18" MIN BEYOND THE PEDESTRIAN PUSH BUTTON FOR ALL CURB RAMP TYPES. WHEN NO PEDESTRIAN PUSH BUTTON EXISTS, THE 18" EXTENSION CAN BE OMITTED.
11). CONSTRUCTION JOINTS ARE REQUIRED AT THE INTERVALS SPECIFIED IN NOTE 6 ON DETAIL M-3, SHEET 1 OF 1. HOWEVER, EXPANSION MATERIAL SHALL NOT BE USED IN THE RAMP SECTION.
12). PEDESTRIAN SIGNALS SHALL BE ACCESSIBLE WITH A LEVEL LANDING, WHOSE EDGE IS NO MORE THAN 10" FROM ALL PEDESTRIAN BUTTONS.

DELAWARE DEPARTMENT OF TRANSPORTATION	CURB RAMPS, TYPES 2, 3, & 4		APPROVED	SIGNATURE ON FILE (CHIEF ENGINEER) — 02/14/2014 (DATE)
	STANDARD NO. C-2 (2013)	SHT. 2 OF 3	RECOMMENDED	SIGNATURE ON FILE (DESIGN ENGINEER) — 01/14/2014 (DATE)

1/9/2014