# SECTION I - BARRIER

# SECTION I - BARRIER (CONT'D)



# SECTION II - CURB & GUTTER



# SECTION III - DRAINAGE

# SECTION III - DRAINAGE (CONT'D)



# SECTION IV - EROSION

# SECTION V - LANDSCAPING



# SECTION VI - MISCELLANEOUS



# SECTION VII - PAVEMENT

# SECTION VIII - TRAFFIC

SCALE : NTS

# BARRIER LEGEND

| ITEM NO. | DESCRIPTION |
|---|---|
| 1 | W-BEAM |
| 2 | W6 X 9 STEEL POST |
| 3A 3B | 3A - 6" x 12" x 14" OFFSET BLOCK<br>3B - 6" x 8" x 14" OFFSET BLOCK |
| 4 | SPLICE - REQUIRES EIGHT(8) ⅝" GUARDRAIL BOLTS (L=1¼") WITH RECESS NUTS |
| 5 | W-BEAM TERMINAL CONNECTOR |
| 6 | ⅝" GUARDRAIL BOLT (L=1¼") AND RECESS NUT |
| 7A 7B | 7A - ⅝" GUARDRAIL BOLT (L=14") AND RECESS NUT<br>7B - ⅝" GUARDRAIL BOLT (L=10") AND RECESS NUT |
| 8 | ⅝" GUARDRAIL BOLT (L=10"), STEEL WASHER, AND RECESS NUT |
| 9 | ⅞" HIGH STRENGTH STRUCTURAL HEX BOLT (L=VARIES) AND HEX NUT |
| 10 | ⅝" CARRIAGE BOLT (L=VARIES), STEEL WASHER, AND HEX NUT |
| 11 | BEARING PLATE |

DELAWARE
DEPARTMENT OF TRANSPORTATION

BARRIER LEGEND

STANDARD NO. B-L (2017) SHT. 1 OF 1

APPROVED SIGNATURE ON FILE (CHIEF ENGINEER) 5/31/2017 (DATE)

RECOMMENDED SIGNATURE ON FILE (DESIGN ENGINEER) 5/18/2017 (DATE)

5/10/2017

SCALE : NTS

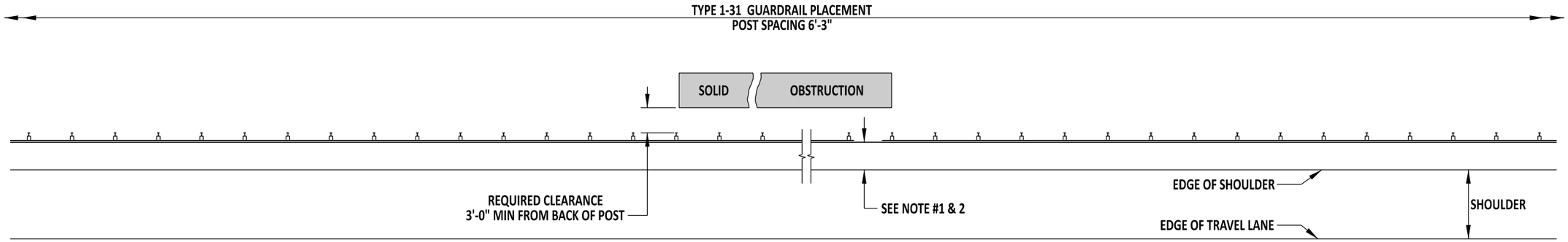


## TYPE 1-31 GUARDRAIL

TYPICAL GUARDRAIL TREATMENT WHEN THE REQUIRED
3'-0" CLEARANCE TO THE OBSTRUCTION IS AVAILABLE

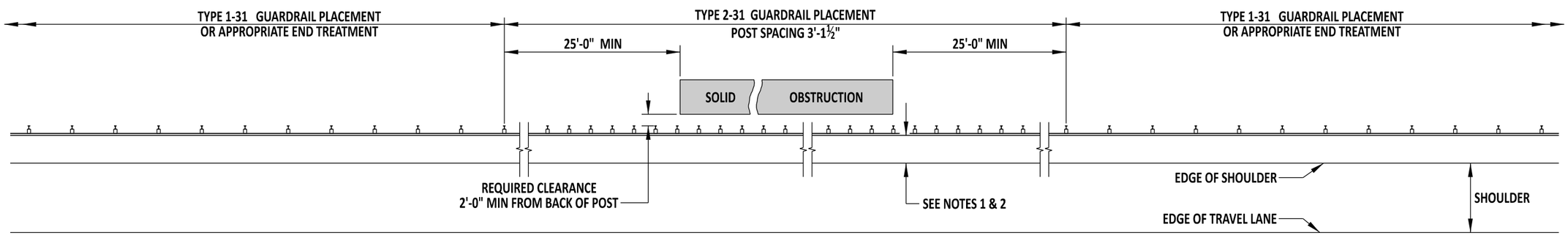


## TYPE 2-31 GUARDRAIL

TYPICAL GUARDRAIL TREATMENT WHEN 2'-0" TO 3'-0"
OF CLEARANCE TO OBSTRUCTION IS AVAILABLE

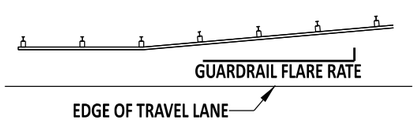


| FLARE RATES | |
|---|---|
| DESIGN SPEED | FLARE RATE |
| 70 MPH | 15:1 |
| 60 MPH | 14:1 |
| 55 MPH | 12:1 |
| 50 MPH | 11:1 |
| 45 MPH | 10:1 |
| 40 MPH | 9:1 |
| 30 MPH | 7:1 |

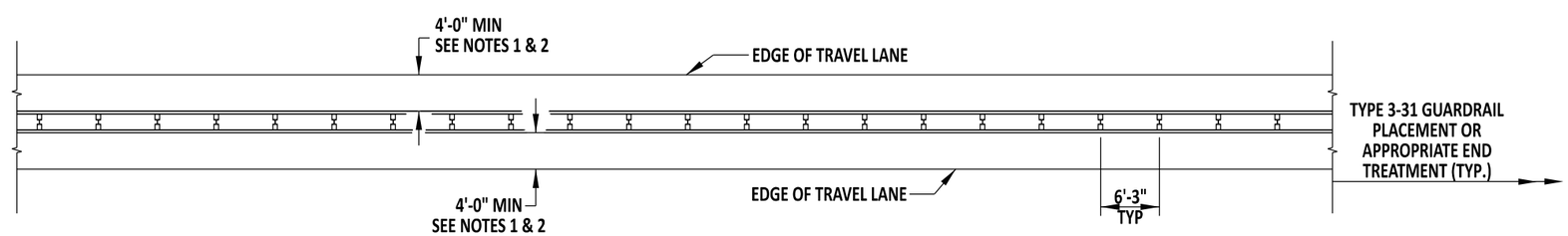


## TYPE 3-31 GUARDRAIL

TYPICAL MEDIAN GUARDRAIL TREATMENT

NOTES :

1). MAXIMIZE THE DISTANCE FROM THE EDGE OF THE TRAVEL LANE OR SHOULDER TO THE FACE OF GUARDRAIL. THIS AREA SHALL BE GRADED 10:1 OR FLATTER.
2). GRADE THIS AREA 10:1 OR FLATTER

| | | | |
|---|---|---|---|
| DELAWARE DEPARTMENT OF TRANSPORTATION | TYPES 1-31, 2-31, AND 3-31 GUARDRAIL APPLICATIONS | APPROVED | SIGNATURE ON FILE (CHIEF ENGINEER) — 5/31/2017 (DATE) |
| | STANDARD NO. B-1 (2017) — SHT. 1 OF 3 | RECOMMENDED | SIGNATURE ON FILE (DESIGN ENGINEER) — 5/18/2017 (DATE) |

5/10/2017

SCALE : NTS

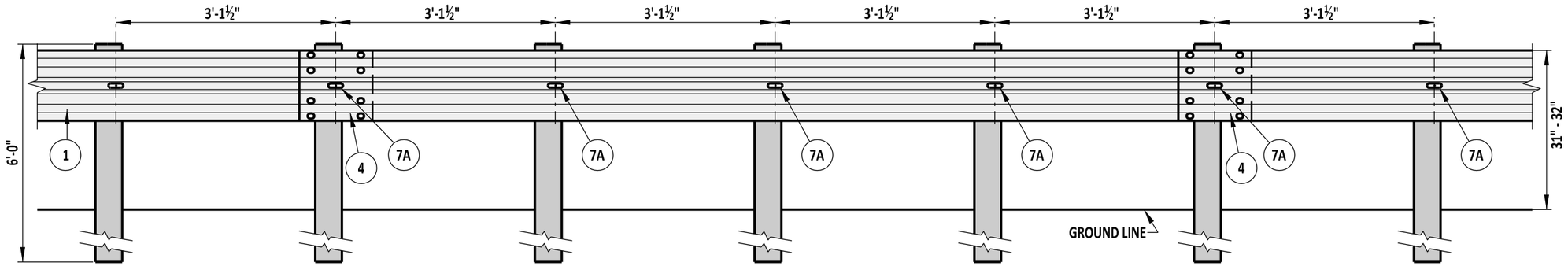


**TYPE 2-31**

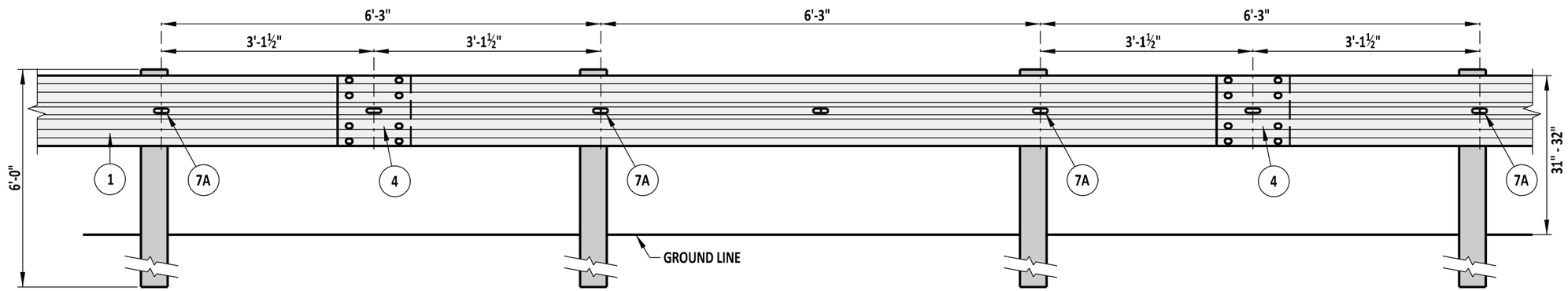


**TYPE 1-31 OR 3-31**

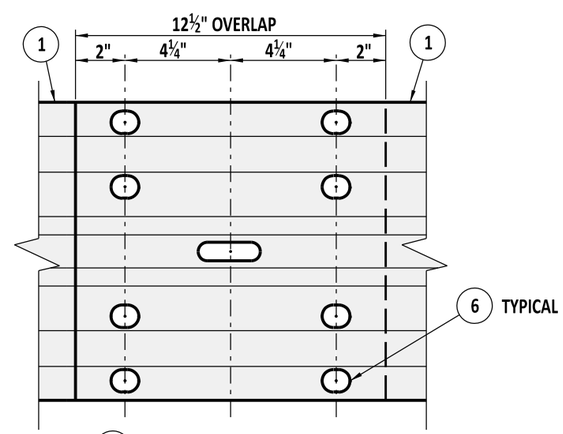


4 **SPLICE DETAIL**

NOTE :

1). OVERLAP W-BEAMS IN DIRECTION OF TRAVEL.
2). SEE DETAIL B-L, SHEET 1 FOR MORE INFORMATION

| | | | | | |
|---|---|---|---|---|---|
| DELAWARE DEPARTMENT OF TRANSPORTATION | TYPES 1-31, 2-31, AND 3-31 GUARDRAIL APPLICATIONS | | APPROVED | SIGNATURE ON FILE (CHIEF ENGINEER) | 5/31/2017 (DATE) |
| | STANDARD NO. B-1 (2017) | SHT. 2 OF 3 | RECOMMENDED | SIGNATURE ON FILE (DESIGN ENGINEER) | 5/18/2017 (DATE) |

5/10/2017

SCALE : NTS

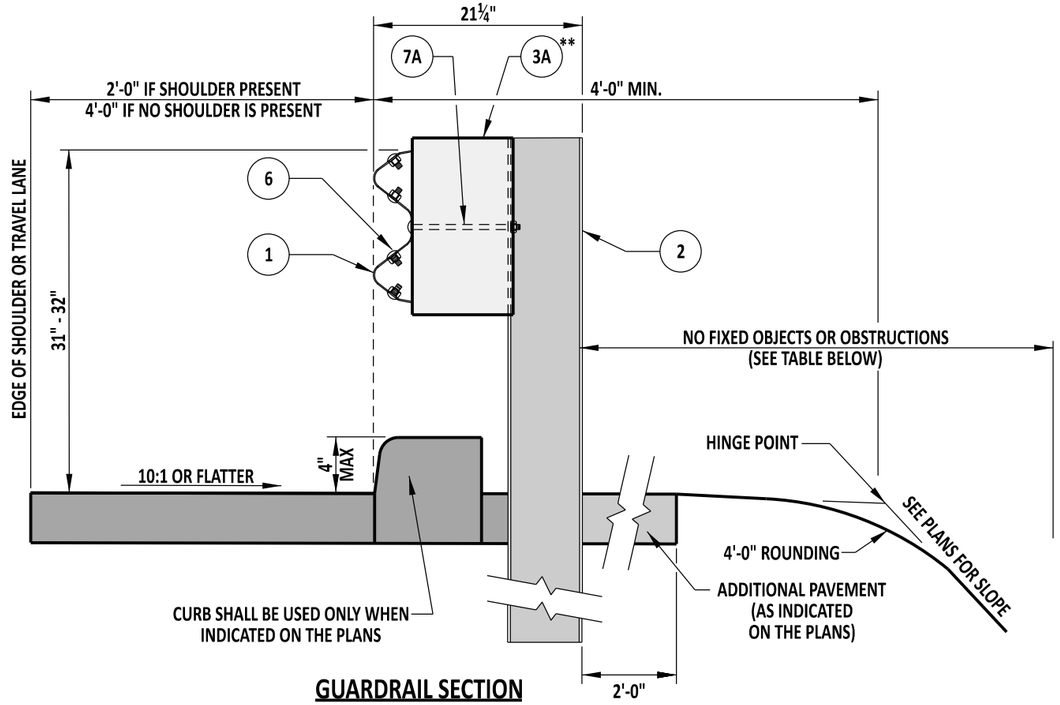


**GUARDRAIL SECTION**
RURAL SHOULDER APPLICATION

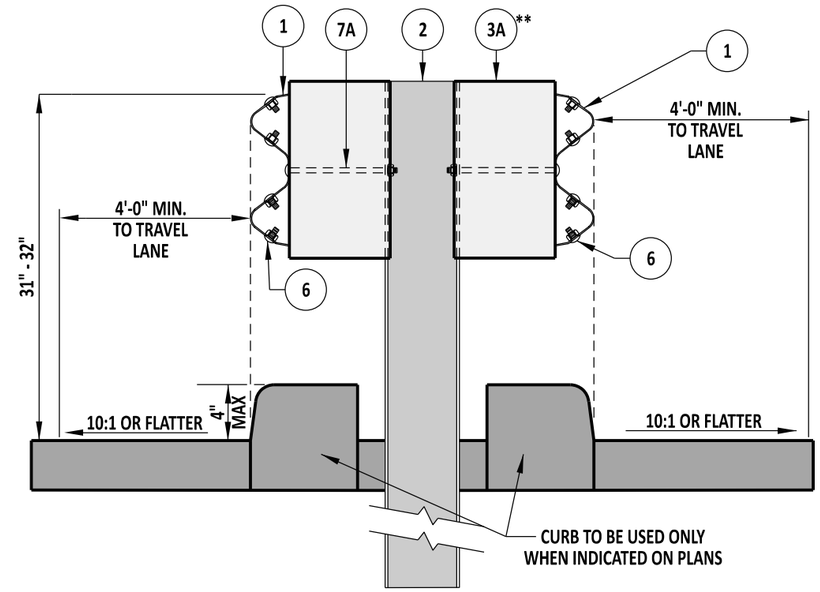


**GUARDRAIL SECTION**
MEDIAN APPLICATION

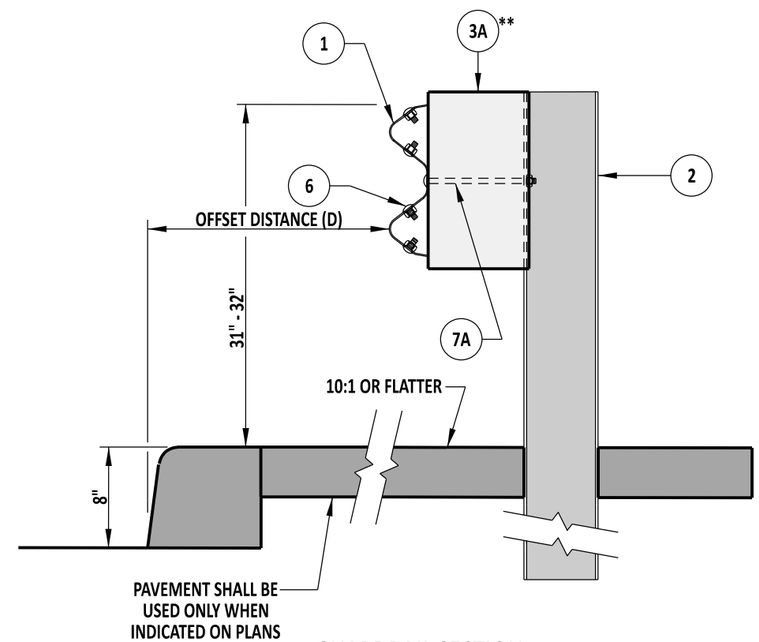


**GUARDRAIL SECTION**
URBAN SHOULDER APPLICATION

| TYPE | POST SPACING | CLEAR AREA BEHIND POST |
|---|---|---|
| 1 | 6'-3" | 3'-0" MIN |
| 2 | 3'-1½" | 2'-0" MIN |

| DESIGN SPEED | D |
|---|---|
| < 50 MPH | 8'-0" |
| ≥ 50 MPH | 13'-0" |

** - SEE STANDARD SPECIFICATIONS CONCERNING THE USE OF ALTERNATIVE OFFSET BLOCK MATERIALS

DELAWARE
DEPARTMENT OF TRANSPORTATION

TYPES 1-31, 2-31, AND 3-31 GUARDRAIL APPLICATIONS

STANDARD NO. B-1 (2017) | SHT. 3 OF 3

APPROVED SIGNATURE ON FILE (CHIEF ENGINEER) 5/31/2017 (DATE)

RECOMMENDED SIGNATURE ON FILE (DESIGN ENGINEER) 5/18/2017 (DATE)

5/10/2017

SCALE : NTS

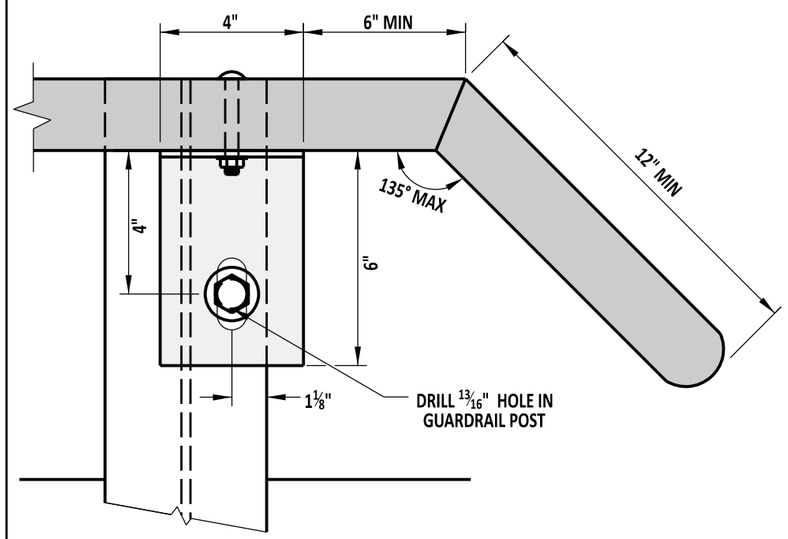


REAR VIEW WITH START & END SECTION

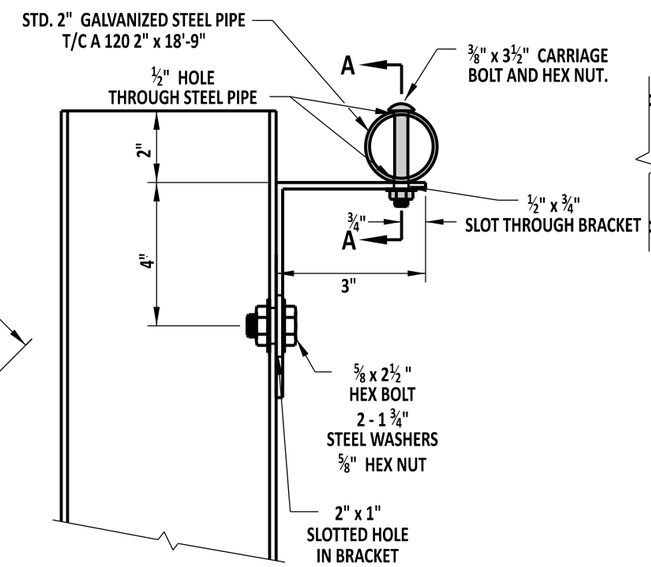


SIDE VIEW

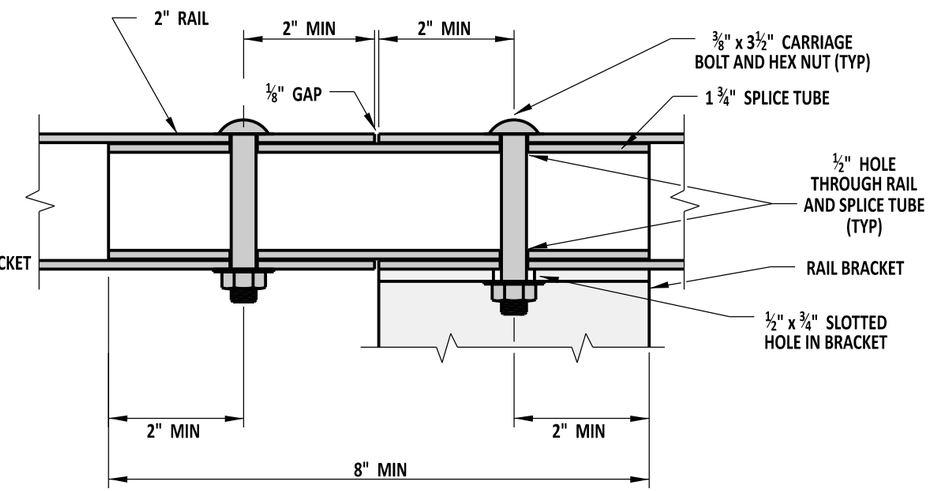


SECTION A-A AT RAIL SPLICE

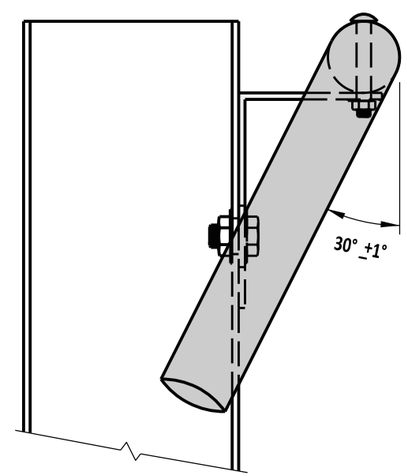


SIDE VIEW WITH START & END SECTION

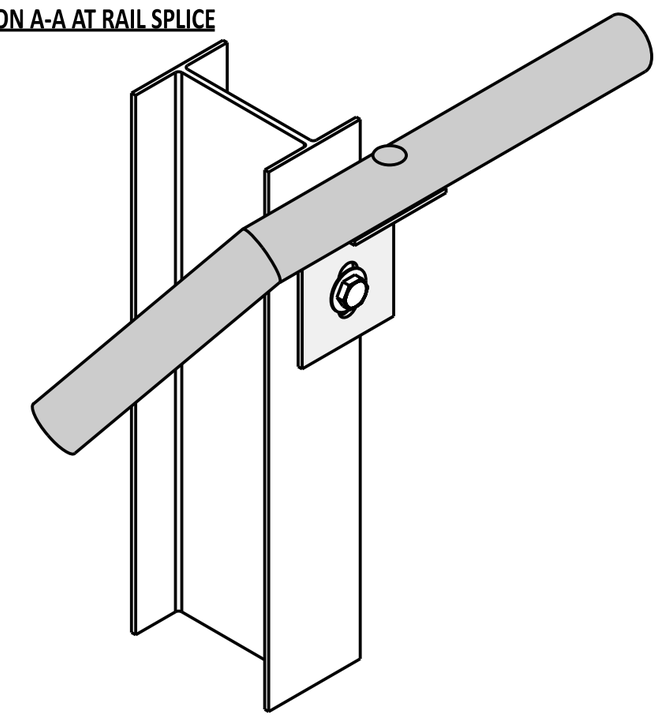

ISOMETRIC VIEW WITH START & END SECTION

NOTES:

1). USE THIS RAIL ADJACENT TO AN PEDESTRIAN ACCESS ROUTE.
2). SHOP FABRICATE ALL COMPONENTS OF THE RAIL INCLUDING CUTTING AND DRILLING.
3). BUR ALL EXPOSED THREADED HARDWARE TO ENSURE NUTS CAN NOT BE REMOVED.
4). PRIOR TO GALVANIZING, SHOP DRILL GUARDRAIL POSTS THAT RAIL BRACKETS WILL BE ATTACHED TO.
5). PLACE RAIL SPLICES AT RAIL SUPPORT BRACKETS, USING THE SAME BOLT TO ATTACH THE RAIL TO THE BRACKET, TO SECURE THE SPLICE TUBE.
6). ONLY INSTALL RAILS TO STANDARD W-BEAM SECTIONS AND AT LEAST ONE POST AWAY FROM THE PAYMENT LIMITS OF THE END TREATMENT.

| | | | | |
|---|---|---|---|---|
| DELAWARE DEPARTMENT OF TRANSPORTATION | GUARDRAIL MOUNTED RAIL | | APPROVED | SIGNATURE ON FILE (CHIEF ENGINEER) — 5/31/2017 (DATE) |
| | STANDARD NO. B-13 (2017) | SHT. 10 OF 10 | RECOMMENDED | SIGNATURE ON FILE (DESIGN ENGINEER) — 5/18/2017 (DATE) |

5/10/2017

SCALE : NTS

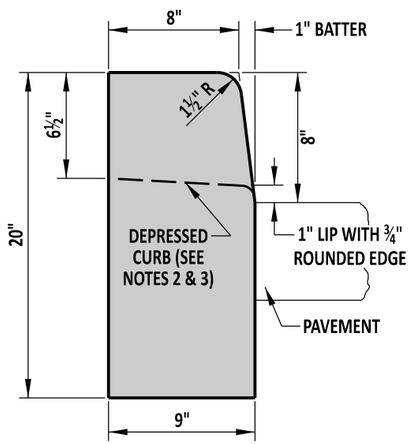


**P.C.C. CURB**
TYPE 1-8

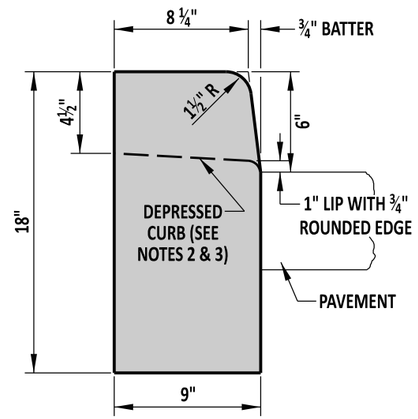


**P.C.C. CURB**
TYPE 1-6

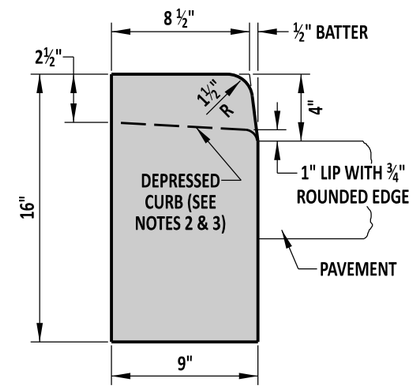


**P.C.C. CURB**
TYPE 1-4

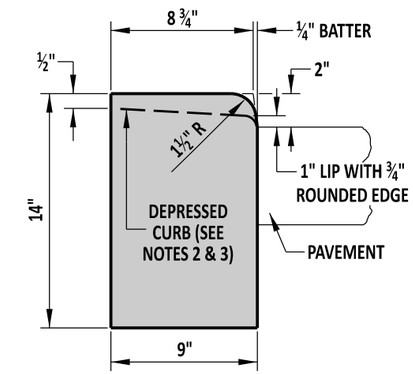


**P.C.C. CURB**
TYPE 1-2

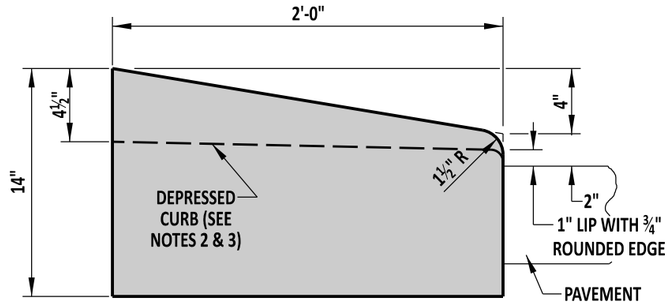


**P.C.C. CURB**
TYPE 2

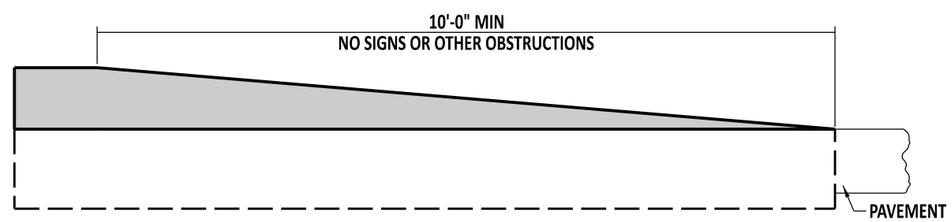


**TYPICAL TAPER SECTION AT NOSE OF MEDIANS**
TYPE 1-8 CURB SHOWN

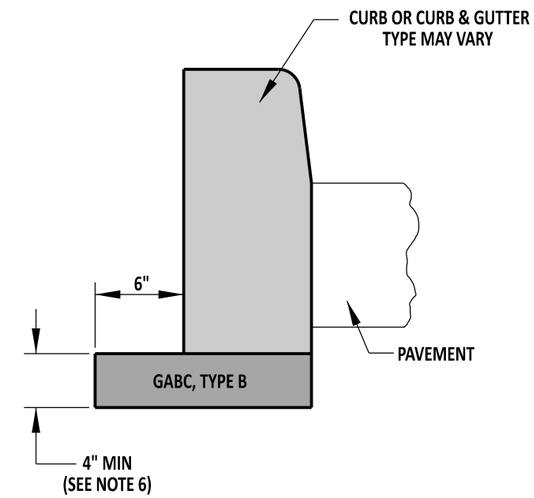


**TYPICAL CURB SECTION**

NOTES:

1). WHEN P.C.C. CURB OR INTEGRAL P.C.C. CURB AND GUTTER IS PLACED ADJACENT TO PORTLAND CEMENT CONCRETE PAVEMENT, CONSTRUCT THE JOINT AS PER THE LONGITUDINAL JOINT SEALANT DETAIL ON DETAIL P-2, SHEET 3. USE APPROVED JOINT FILLER TO SEAL. WORK TO BE PAID UNDER RESPECTIVE CURB AND GUTTER ITEM.
2). THE DEPRESSED CURB DIMENSIONS (INCLUDING 1" LIP) ON THIS SHEET ARE FOR USE AT ENTRANCES ONLY. FOR CURB DEPRESSIONS AT CURB RAMPS, SEE NOTE 3.
3). AT CURB RAMPS, DEPRESS CURB FLUSH WITH THE PAVEMENT (WITH NO LIP). SLOPE THE TOP OF THE CURB 8.3% OR FLATTER IN THE DIRECTION OF PEDESTRIAN TRAVEL.
4). DEPRESS CURB FLUSH WITH PAVEMENT OR ADJACENT AREA AT ALL CORNERS OF TRIANGULAR ISLANDS, TAPERING BACK TO FULL HEIGHT AT A RATE OF 4:1.
5). TAPER END OF CURB RUNS NOT PART OF AN ISLAND OR MEDIAN FLUSH WITH PAVEMENT OR ADJACENT AREA AT A RATE OF 12:1.
6). FOR SUBDIVISION APPLICATIONS, A MINIMUM OF 6" OF GABC IS REQUIRED.

| | | | | |
|---|---|---|---|---|
| DELAWARE DEPARTMENT OF TRANSPORTATION | P.C.C. CURB | | APPROVED | SIGNATURE ON FILE (CHIEF ENGINEER) — 5/31/2017 (DATE) |
| | STANDARD NO. C-1 (2017) | SHT. 1 OF 3 | RECOMMENDED | SIGNATURE ON FILE (DESIGN ENGINEER) — 5/18/2017 (DATE) |

5/10/2017

SCALE : NTS

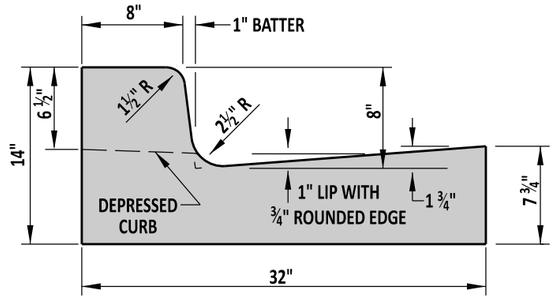


**INTEGRAL P.C.C. CURB AND GUTTER**
TYPE 1-8

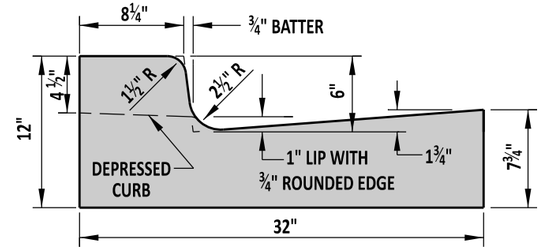


**INTEGRAL P.C.C. CURB AND GUTTER**
TYPE 1-6

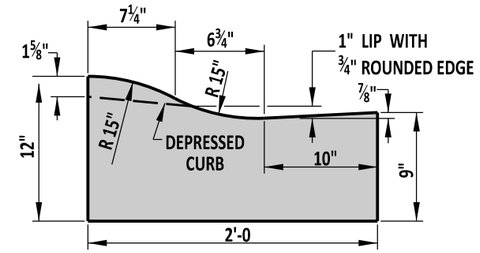


**INTEGRAL P.C.C. CURB AND GUTTER**
TYPE 2

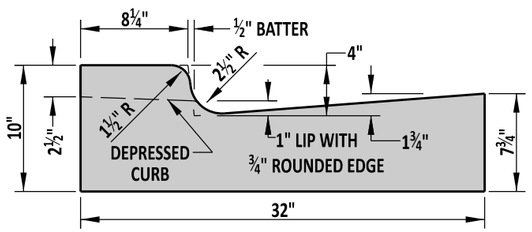


**INTEGRAL P.C.C. CURB AND GUTTER**
TYPE 1-4

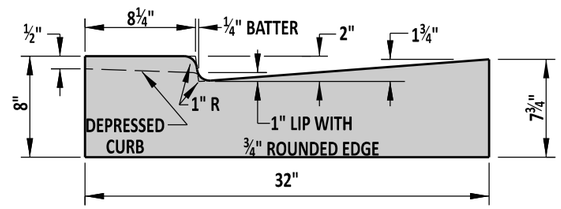


**INTEGRAL P.C.C. CURB AND GUTTER**
TYPE 1-2

**NOTES:**

1). WHEN P.C.C. CURB OR INTEGRAL P.C.C. CURB AND GUTTER IS PLACED ADJACENT TO PORTLAND CEMENT CONCRETE PAVEMENT, CONSTRUCT THE JOINT AS PER THE LONGITUDINAL JOINT SEALANT DETAIL ON DETAIL P-2, SHEET 3 OF 5. USE APPROVED JOINT FILLER TO SEAL. WORK TO BE PAID UNDER RESPECTIVE CURB AND GUTTER ITEM.
2). THE DEPRESSED CURB DIMENSIONS (INCLDING 1" LIP) ON THIS SHEET ARE FOR USE AT ENTRANCES ONLY. FOR CURB DIMENSIONS AT CURB RAMPS, SEE NOTE 3.
3). SEE DETAIL C-1, SHEET 3 FOR DEPRESSING AT CURB RAMPS.
4). DEPRESS CURB FLUSH WITH PAVEMENT OR ADJACENT AREA AT LEADING EDGE OF TRIANGULAR ISLANDS, TAPERING BACK TO FULL HEIGHT AT A SLOPE OF 4:1. SEE DETAIL C-1, SHEET 1 OF 2 FOR TYPICAL SECTION OF TAPER AT NOSE OF MEDIAN ISLANDS.
5). 4" OF GABC, TYPE B SHALL BE PLACED UNDER ALL P.C.C. CURB AND P.C.C. CURB AND GUTTER. SEE DETAIL C-1, SHEET 1 OF 2 FOR TYPICAL SECTION.
6). DEPRESS END OF CURB RUNS NOT PART OF AN ISLAND OR MEDIAN FLUSH WITH PAVEMENT OR ADJACENT AREA AT A SLOPE OF 12:1.

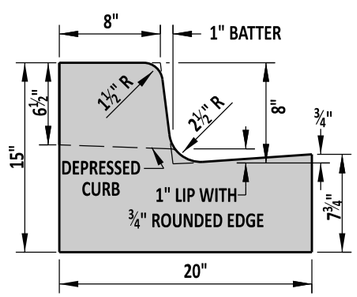


**INTEGRAL P.C.C. CURB AND GUTTER**
TYPE 3-8

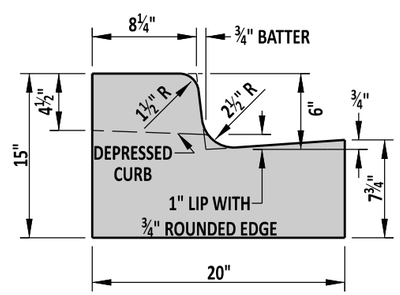


**INTEGRAL P.C.C. CURB AND GUTTER**
TYPE 3-6

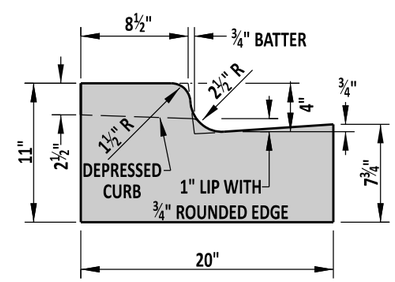


**INTEGRAL P.C.C. CURB AND GUTTER**
TYPE 3-4

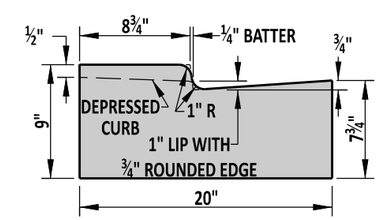


**INTEGRAL P.C.C. CURB AND GUTTER**
TYPE 3-2

| | | | | |
|---|---|---|---|---|
| DELAWARE DEPARTMENT OF TRANSPORTATION | INTEGRAL P.C.C. CURB & GUTTER | | APPROVED | SIGNATURE ON FILE (CHIEF ENGINEER) — 5/31/2017 (DATE) |
| | STANDARD NO. C-1 (2017) | SHT. 2 OF 3 | RECOMMENDED | SIGNATURE ON FILE (DESIGN ENGINEER) — 5/18/2017 (DATE) |

5/10/2017

THIS DETAIL IS TO BE USED ONLY FOR THE SECTIONS OF CURB & GUTTER THAT ARE DIRECTLY IN FRONT OF THE CURB RAMPS. REFER TO DETAIL C-1, SHEET 2 FOR TYPICAL CURB DIMENSIONS AND FOR DEPRESSING CURB AT ENTRANCES

SCALE : NTS

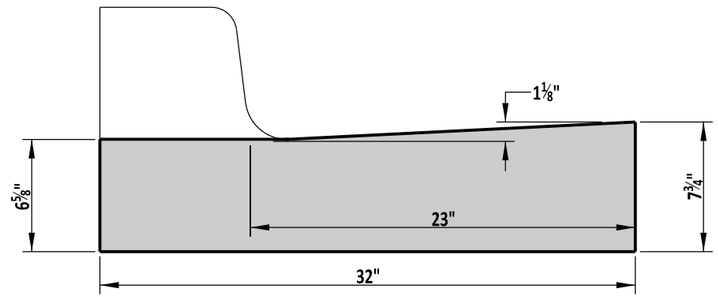


**INTEGRAL P.C.C. CURB AND GUTTER**
TYPES 1-2 THRU 1-8

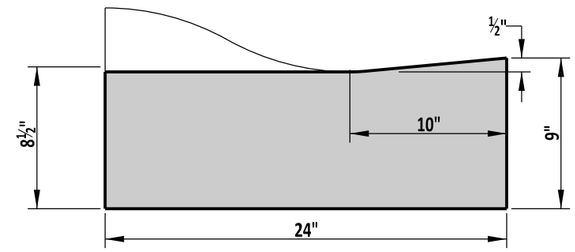


**INTEGRAL P.C.C. CURB AND GUTTER**
TYPE 2

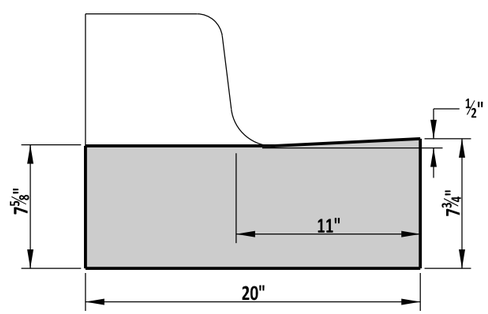


**INTEGRAL P.C.C. CURB AND GUTTER**
TYPES 3-2 THRU 3-8

**NOTES:**

1). WHEN P.C.C. CURB OR INTEGRAL P.C.C. CURB AND GUTTER IS PLACED ADJACENT TO PORTLAND CEMENT CONCRETE PAVEMENT, CONSTRUCT THE JOINT AS PER THE LONGITUDINAL JOINT SEALANT DETAIL ON DETAIL P-2, SHEET 3. USE APPROVED JOINT FILLER TO SEAL. WORK TO BE PAID UNDER RESPECTIVE CURB AND GUTTER ITEM.

2). DEPRESS CURB FLUSH WITH PAVEMENT (WITH NO LIP). SLOPE THE TOP OF THE CURB 8.3% OR FLATTER IN THE DIRECTION OF PEDESTRIAN TRAVEL. THE MAXIMUM SLOPE OF THE GUTTER PAN IN CURB RAMPS IS 5%. SEE DETAIL C-2, SHEET 1.

3). SEE TYPICAL CURB SECTION DETAIL AND NOTE 6 ON DETAIL C-1, SHEET 1 FOR PLACEMENT OF GABC UNDER CURB AND GUTTER.

4). TRANSITION FROM STANDARD GUTTER SLOPE TO SLOPE SHOWN ON THIS DETAIL OVER A DISTANCE OF 5'-0".

| | | | | | |
|---|---|---|---|---|---|
| DELAWARE DEPARTMENT OF TRANSPORTATION | INTEGRAL P.C.C. CURB & GUTTER (FOR USE AT CURB RAMPS ONLY) | | | APPROVED | SIGNATURE ON FILE (CHIEF ENGINEER) — 5/31/2017 (DATE) |
| | STANDARD NO. C-1 (2017) | SHT. 3 OF 3 | | RECOMMENDED | SIGNATURE ON FILE (DESIGN ENGINEER) — 5/18/2017 (DATE) |

5/10/2017

SCALE : NTS

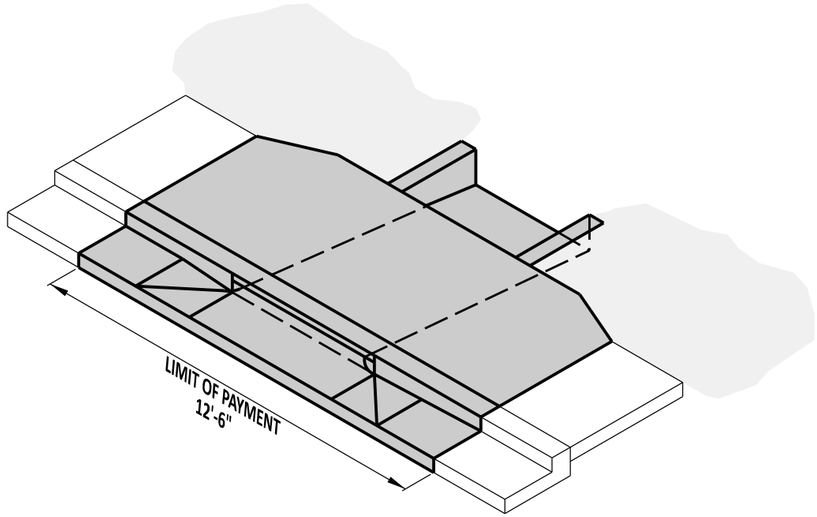


ISOMETRIC

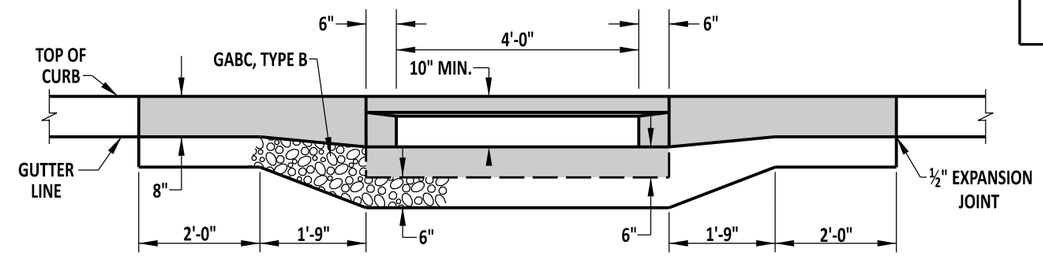


SECTION A-A

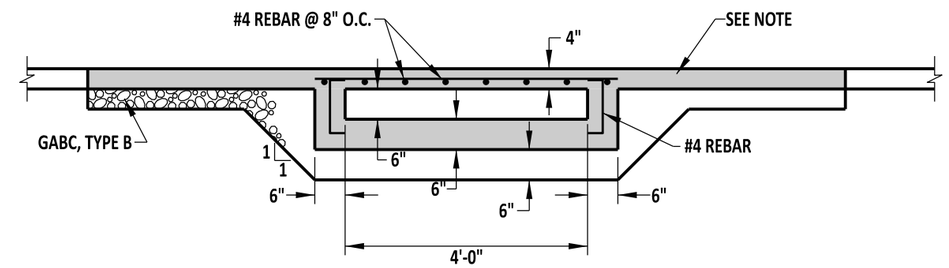


SECTION B-B

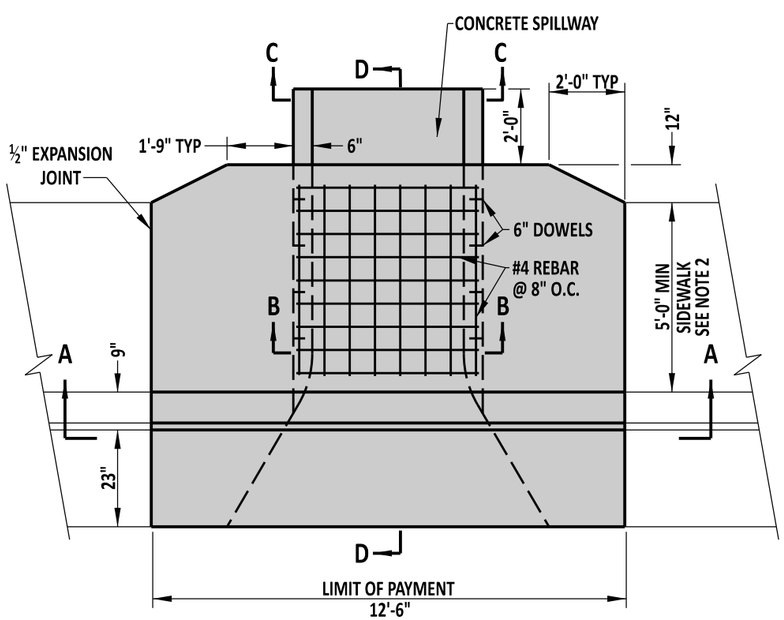


PLAN

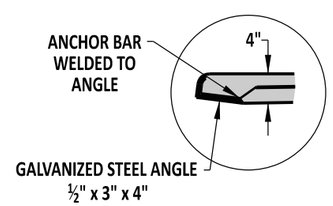


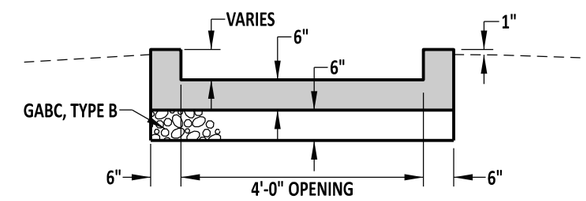


SECTION C-C

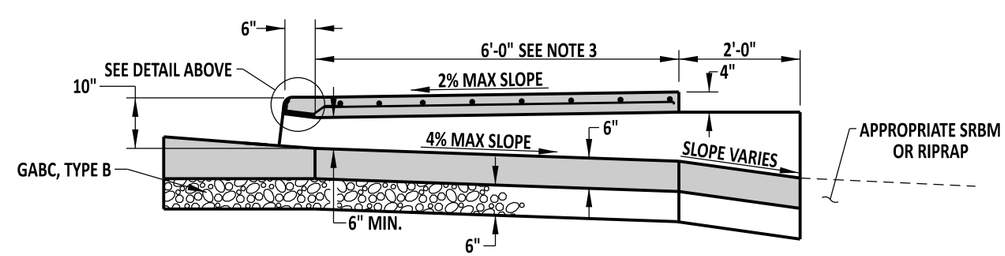


SECTION D-D

CURB / SIDEWALK OPENING

NOTE:

1). WHEN A GRASS STRIP IS PRESENT BETWEEN THE BACK OF CURB AND SIDEWALK, THE SIDEWALK PORTION OF THIS STRUCTURE MAY BE PRECAST. HOWEVER, WHEN THE SIDEWALK IS DIRECTLY BEHIND THE CURB, THE ENTIRE UNIT MUST BE CAST-IN-PLACE.
2). SIDEWALK WIDTHS LESS THAN SHOWN ON THIS SHEET REQUIRE DEPARTMENT APPROVAL. SEE PEDESTRIAN ACCESSIBILITY STANDARDS MANUAL FOR MORE GUIDANCE.
3). THE SLAB WIDTH OVER THE CONCRETE SPILLWAY SHALL BE 12" WIDER THAN THE SIDEWALK WIDTH ON THE APPROACH TO THE CURB OPENING

| | | | | |
|---|---|---|---|---|
| DELAWARE DEPARTMENT OF TRANSPORTATION | CURB OPENING WITH SIDEWALK DETAIL | | APPROVED | SIGNATURE ON FILE (CHIEF ENGINEER) — 5/31/2017 (DATE) |
| | STANDARD NO. C-5 (2017) | SHT. 1 OF 1 | RECOMMENDED | SIGNATURE ON FILE (DESIGN ENGINEER) — 5/18/2017 (DATE) |

5/11/2017

| WALL HEIGHT (H) | TOEWALL DEPTH (T) | REQUIRED TRANSVERSE REINFORCEMENT | REQUIRED LONGITUDINAL REINFORCEMENT |
|---|---|---|---|
| GREATER THAN 12" TO 2'-6" | NO TOEWALL NEEDED | #4 BARS @ 6" (RW02E, & RW03E) | #4 BARS @ 12" (RW01E & TW01E) |
| GREATER THAN 2'-6" TO 3'-0" | 6" | #4 BARS @ 6" (RW02E, RW03E, & TW02E) | #4 BARS @ 12" (RW01E & TW01E) |
| GREATER THAN 3'-0" TO 3'-6" | 12" | #5 BARS @ 6" (RW02E, RW03E, & TW02E) | #4 BARS @ 12" (RW01E & TW01E) |

SCALE : NTS

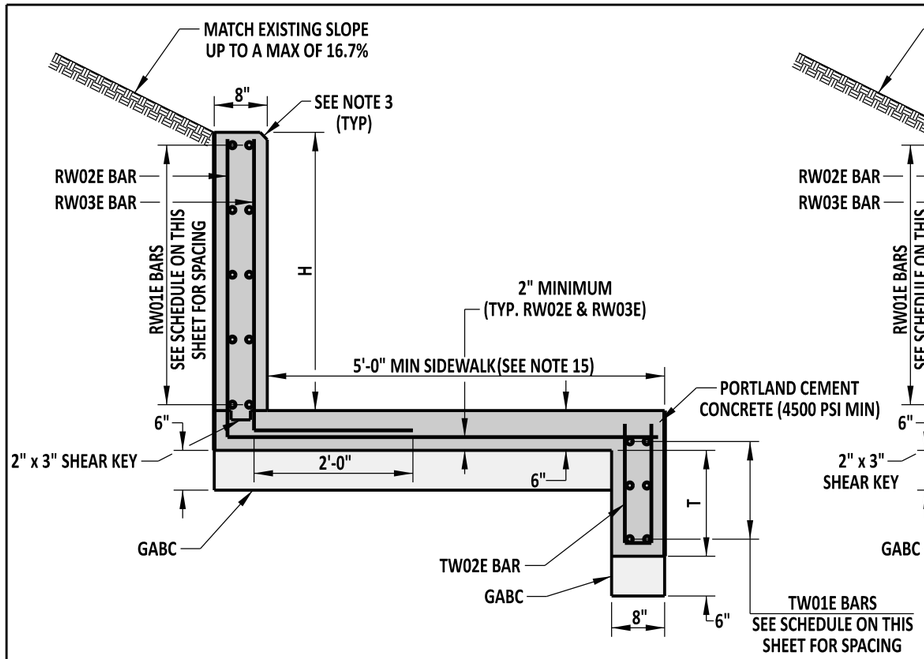


## CURB RETAINING WALL SECTION

FOR H GREATER THAN 2'-6"

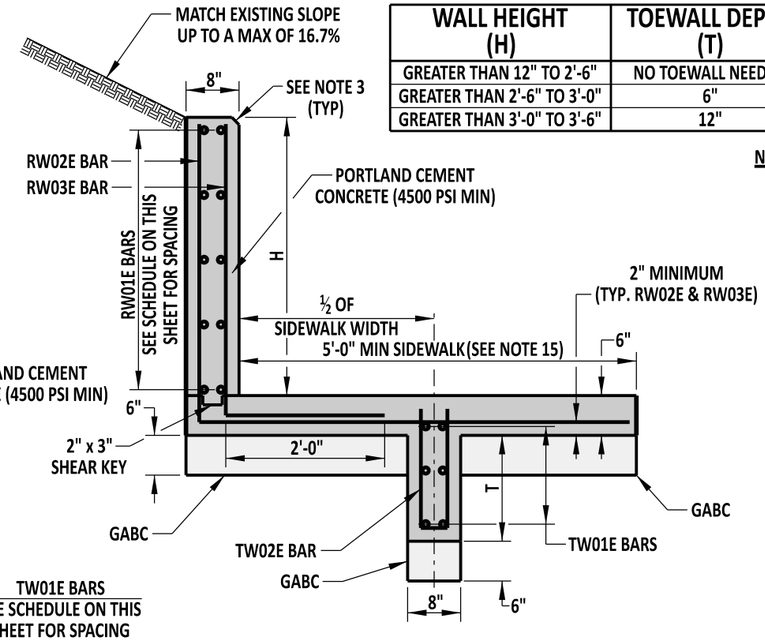


## OPTIONAL TOEWALL PLACEMENT CURB RETAINING WALL SECTION

FOR H GREATER THAN 2'-6"

NOTES:

1). THE CURB RETAINING WALL DETAILS ARE FOR QUICK FIELD CHANGES WITH APPROVAL OF THE ENGINEER. MODULAR BLOCK WALLS OR ANY OTHER SMALL RETAINING WALLS ARE THE PREFERRED CHOICE DURING PLAN DEVELOPMENT.
2). WHEN H IS GREATER THAN 2'-6", CAST THE CURB RETAINING WALLS IN PLACE. WHEN H IS GREATER THAN 12" AND LESS THAN 2'-6", THE WALLS CAN BE EITHER PRECAST OR CAST-IN-PLACE.
3). CHAMFER EDGES ¾" AT THE TOP OF WALL. PLACE A ¼" ROUND EDGE AT THE FRONT OF SIDEWALK.
4). THE RETAINING WALL HAS BEEN DESIGNED TO RESIST EARTH PRESSURE ONLY. ADDITIONAL REINFORCEMENT MAY BE REQUIRED IF ANY SURCHARGE IS APPLIED BEHIND THE RETAINING WALL WITHIN A DISTANCE EQUAL TO 2 TIMES H AND WOULD REQUIRE AN APPROVED SHOP DRAWING.
5). MINIMUM BAR COVER IS 2" UNLESS OTHERWISE SPECIFIED ON THIS SHEET.
6). BEND THE RW02E AND RW03E BARS INTO ONE CONTINUOUS L-SHAPED BAR.
7). BEND THE TW02E BARS INTO 1 CONTINUOUS U-SHAPED BAR.
8). SEE DETAIL M-3 FOR SIDEWALK DETAILS AND NOTES, INCLUDING CONSTRUCTION JOINTS AND EXPANSION MATERIAL.
9). DO NOT PLACE RW01E AND TW01E BARS THROUGH EXPANSION JOINTS. STOP REINFORCEMENT AND MAINTAIN MINIMUM BAR COVER AS SPECIFIED IN PREVIOUS NOTES.
10). THE TOEWALL CAN OPTIONALLY BE PLACED AT MIDPOINT OF THE SIDEWALK.
11). ALL REINFORCING STEEL MUST BE EPOXY COATED.
12). IF A CURB IS CONSTRUCTED ADJACENT TO THE STRUCTURE, COAT THE FRONT FACE OF THE SIDEWALK/TOEWALL WITH AN APPROVED BOND BREAKER AGENT PRIOR TO THE PLACEMENT OF CONCRETE FOR THE CURB.
13). FOR CURB RETAINING WALLS WHERE H IS 12" OR LESS, A MODIFIED P.C.C. CURB TYPE 1-8 CAN BE USED.
14). CURB HAS BEEN OMITTED FROM THESE DETAILS FOR CLARITY PURPOSES. FOR INSTALLATIONS WHERE THE TOE WALL IS PLACED AT THE EDGE OF THE SIDEWALK, THE TOEWALL IS NOT A REPLACEMENT FOR CURB.
15). SIDEWALK WIDTHS LESS THEN SHOWN ON THIS SHEET REQUIRE DEPARTMENT APPROVAL. SEE PEDESTRIAN ACCESSIBILITY STANDARDS MANUAL FOR MORE GUIDANCE.

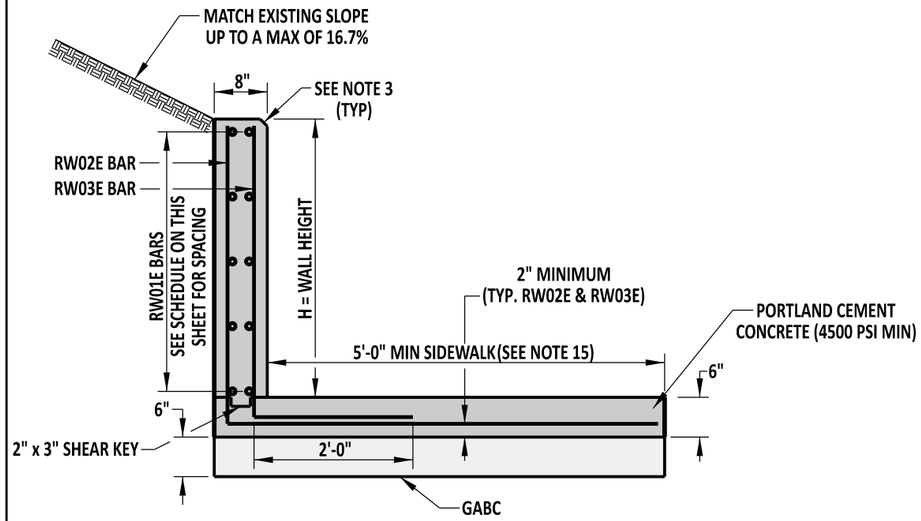


## CURB RETAINING WALL SECTION

FOR HEIGHTS GREATER THAN 12" BUT LESS THAN OR EQUAL TO 2'-6"

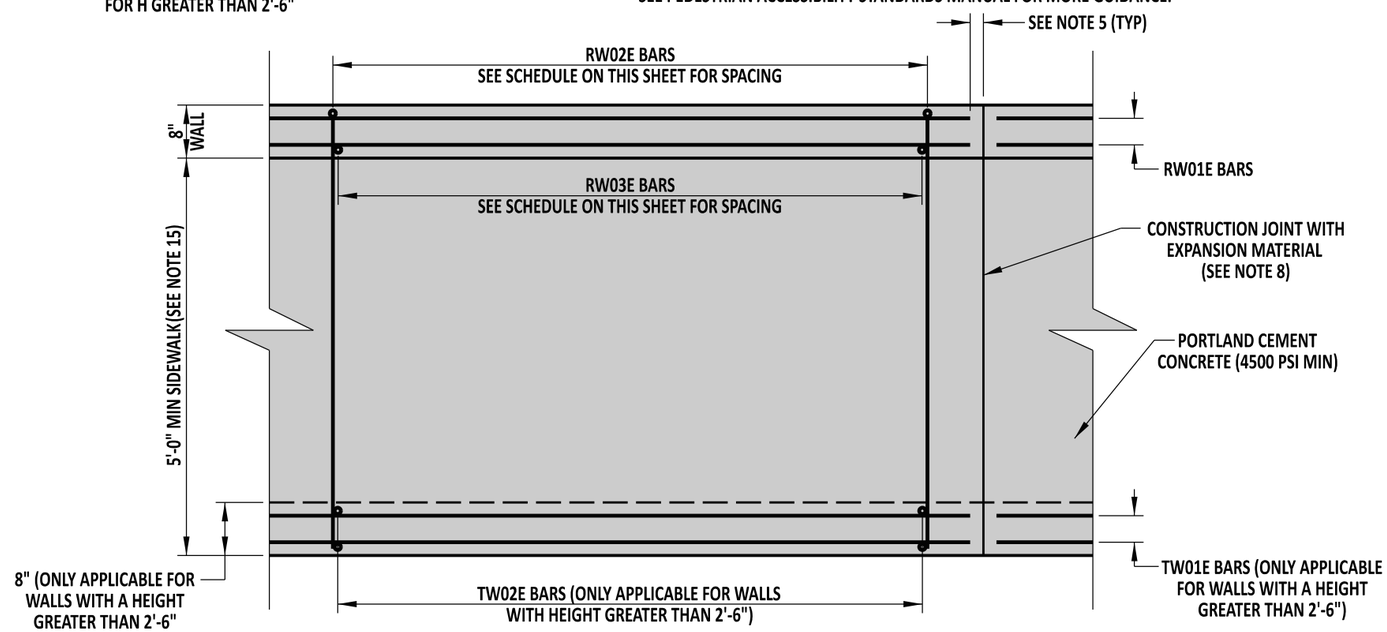


## PLAN VIEW

| | | | |
|---|---|---|---|
| DELAWARE DEPARTMENT OF TRANSPORTATION | CURB RETAINING WALL | APPROVED | SIGNATURE ON FILE (CHIEF ENGINEER) — 5/31/2017 (DATE) |
| | STANDARD NO. C-6 (2017) — SHT. 1 OF 1 | RECOMMENDED | SIGNATURE ON FILE (DESIGN ENGINEER) — 5/18/2017 (DATE) |

5/11/2017

SCALE : NTS

| INLET BOX SIZE | | COVER SLAB SIZE (L X W) | DRAINAGE INLET TOP UNIT | INLET TOP UNIT REBAR LENGTH | INLET TOP UNIT LIMIT OF PAYMENT | INLET TOP UNIT BAR BENDING DIAGRAM | FRAME & GRATE (FOUND ON DETAIL D-5, SHEET 2) SEE NOTE 6 | MAXIMUM PIPE SIZE (SEE NOTE 1) | | MAXIMUM HEIGHT (TO TOP OF BOX) |
|---|---|---|---|---|---|---|---|---|---|---|
| L | W | | | | | | | L | W | |
| 17⅝" | 11⅝" | NO COVER SLAB | TYPE 5 (FRAME & GRATE COMBO) | N/A | N/A | N/A | TYPE 5 (FRAME & GRATE COMBO) | N/A | N/A | 4'-0" |
| 24" | 24" | NO COVER SLAB | TYPE 6 (FRAME & GRATE COMBO) | N/A | N/A | N/A | TYPE 6 (FRAME & GRATE COMBO) | 15" | 15" | 4'-0" |
| 34" | 18" | NO COVER SLAB | TYPES A, C, D, & E (DETAIL D-5, SHEET 7) | 79" | 82" | S504 (DETAIL D-5, SHEET 7) | TYPES 1 THRU 4 AND 7 GRATE STANDARD DRAINAGE INLET FRAME | 24" | 12" | 4'-0" (SEE NOTE 7) |
| 34" | 24" | NO COVER SLAB | TYPES A, B, C, D, E, & S (SEE NOTE 4) | 79" | 82" | S501 (SEE NOTE 5) | TYPES 1 THRU 4 AND 7 GRATE STANDARD DRAINAGE INLET FRAME | 24" | 15" | 11'-4" |
| 48" | 30" | 60" x 42" (DETAIL D-5, SHEET 4) | TYPES A, B, C, D, E & S (SEE NOTE 5) | 93" | 96" | S501 (SEE NOTE 5) | TYPES 1 THRU 4 AND 7 GRATE STANDARD DRAINAGE INLET FRAME | 36" | 21" | 11'-4" |
| 48" | 48" | 60" x 60" (DETAIL D-5, SHEET 4) | TYPES A, B, C, D, E & S (SEE NOTE 5) | 93" | 96" | S501 (SEE NOTE 5) | TYPES 1 THRU 4 AND 7 GRATE STANDARD DRAINAGE INLET FRAME | 36" | 36" | 11'-4" |
| 66" | 30" | 78" x 42" (DETAIL D-4, SHEET 4) | TYPES A, B, C, D, E & S (SEE NOTE 5) | 111" | 114" | S501 (SEE NOTE 5) | TYPES 1 THRU 4 AND 7 GRATE STANDARD DRAINAGE INLET FRAME | 48" | 21" | 11'-4" |
| 66" | 48" | 78" x 60" (DETAIL D-5, SHEET 4) | TYPES A, B, C, D, E & S (SEE NOTE 5) | 111" | 114" | S501 (SEE NOTE 5) | TYPES 1 THRU 4 AND 7 GRATE STANDARD DRAINAGE INLET FRAME | 48" | 36" | 11'-4" |
| 66" | 66" | 78" x 78" (DETAIL D-5, SHEET 4) | TYPES A, B, C, D, E & S (SEE NOTE 5) | 111" | 114" | S501 (SEE NOTE 5) | TYPES 1 THRU 4 AND 7 GRATE STANDARD DRAINAGE INLET FRAME | 48" | 48" | 11'-4" |
| 72" | 24" | 84" x 36" DETAIL D-5, SHEET 5) | TYPES A, B, C, D, E & S (SEE NOTE 5) | 117" | 120" | S501 (SEE NOTE 5) | TYPES 1 THRU 4 AND 7 GRATE STANDARD DRAINAGE INLET FRAME | 54" | 15" | 11'-4" |
| 72" | 48" | 84" x 60" (DETAIL D-5, SHEET 5) | TYPES A, B, C, D, E & S (SEE NOTE 5) | 117" | 120" | S501 (SEE NOTE 5) | TYPES 1 THRU 4 AND 7 GRATE STANDARD DRAINAGE INLET FRAME | 54" | 36" | 11'-4" |
| 72" | 72" | 84" x 84" (DETAIL D-5, SHEET 5) | TYPES A, B, C, D, E & S (SEE NOTE 5) | 117" | 120" | S501 (SEE NOTE 5) | TYPES 1 THRU 4 AND 7 GRATE STANDARD DRAINAGE INLET FRAME | 54" | 54" | 11'-4" |

NOTES :

1). MAXIMUM PIPE SIZES ARE CALCULATED USING REINFORCED CONCRETE PIPE PERPENDICULAR TO THE BOX WALL. FOR OTHER PIPE SIZES, TYPES AND SKEW ANGLES OTHER THAN PERPENDICULAR, SEE CHART ON DELDOT DESIGN RESOURCE CENTER.
2). STEPS ARE REQUIRED ON ALL BOXES WHOSE DEPTH IS 4'-0" OR GREATER.
3). SEE DETAIL D-4 OR APPROPRIATE DETAIL SHEET FOR ADDITIONAL NOTES.
4). FOR A 34" X 24" DRAINAGE INLET, SEE DETAIL D-5, SHEET 6 FOR INLET TOP UNIT TYPES A, B, C, D, & E. FOR INLET TOP UNIT TYPE S, SEE DETAIL D-5, SHEET 8.
5). FOR MORE INFORMATION ON DRAINAGE INLET TOP UNIT TYPES A, B, C, D, & E SEE DETAIL D-5, SHEET 3 AND FOR DRAINAGE INLET TOP UNIT, TYPE S, SEE DETAIL D-5, SHEET 8.
6). ONLY USE THE TYPE 7 DRAINAGE INLET GRATE WHEN SPECIFIED ON THE PLANS OR AFTER APPROVAL BY THE ENGINEER.
7). SEE DETAIL D-5, SHEET 7 FOR MORE INFORMATION ON THE MAXIMUM HEIGHT FOR THE 34" X 18" DRAINAGE INLET.

DELAWARE
DEPARTMENT OF TRANSPORTATION

DRAINAGE INLET REFERENCE SHEET

STANDARD NO. D-R (2017) SHT. 1 OF 1

APPROVED SIGNATURE ON FILE CHIEF ENGINEER 5/31/2017 DATE

RECOMMENDED SIGNATURE ON FILE DESIGN ENGINEER 5/18/2017 DATE

5/11/2017

SCALE : NTS

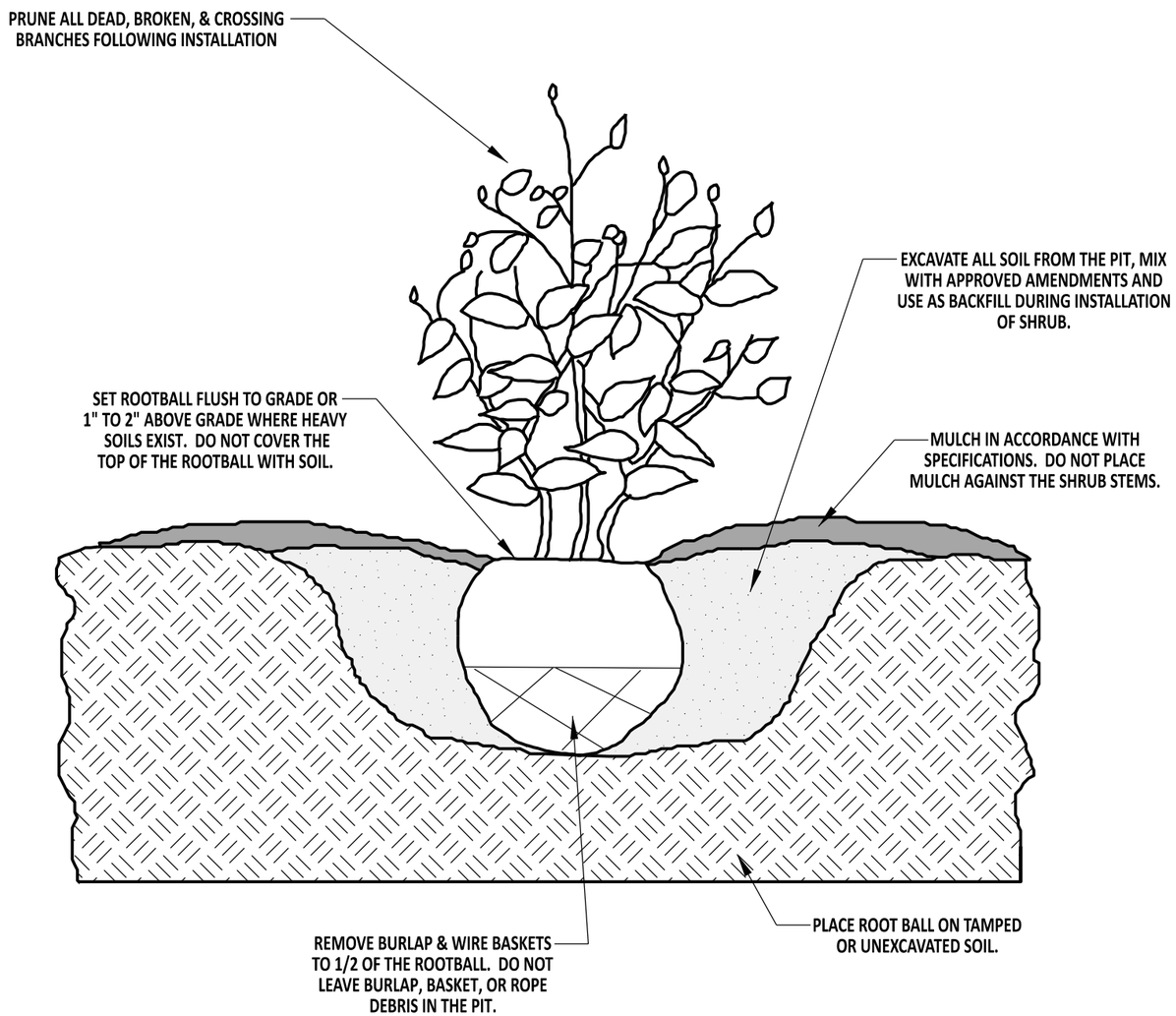


NOTES:

1). DIG BASE OF PLANTING PIT A MINIMUM OF TWO AND A MAXIMUM OF THREE TIMES THE SIZE OF THE ROOT BALL.
2). INSTALL SHRUBS IN MASSES OF NO LESS THAN 3 PLANTS. A MINIMUM OF 3'-0" IS REQUIRED FROM MIDDLE OF SHRUB TO ANY PERMANENT STRUCTURE (I.E. CURB, SIDEWALK, BUILDING, ETC...)
3). SHRUB PRUNING IS TO BE PERFORMED BY AN I.S.A. CERTIFIED ARBORIST, CERTIFIED NURSERY PROFESSIONAL, OR UNDER THE DIRECTION THEREOF. DO NOT HEAVILY PRUNE SHRUBS AT PLANTING.
4). HAND DIG AUGERED HOLES TO FINAL WIDTH AND DEPTH TO ELIMINATE GLAZING.
5). MULCH ALL SHRUB MASSES IN ONE CONTINUOUS BED.

## ROADSIDE SHRUB PLANTING DETAIL

| | | | | | |
|---|---|---|---|---|---|
| DELAWARE DEPARTMENT OF TRANSPORTATION | PLANTING DETAILS | | APPROVED | SIGNATURE ON FILE (CHIEF ENGINEER) | 5/31/2017 (DATE) |
| | STANDARD NO. L-1 (2017) | SHT. 1 OF 3 | RECOMMENDED | SIGNATURE ON FILE (DESIGN ENGINEER) | 5/18/2017 (DATE) |

5/11/2017

SCALE : NTS

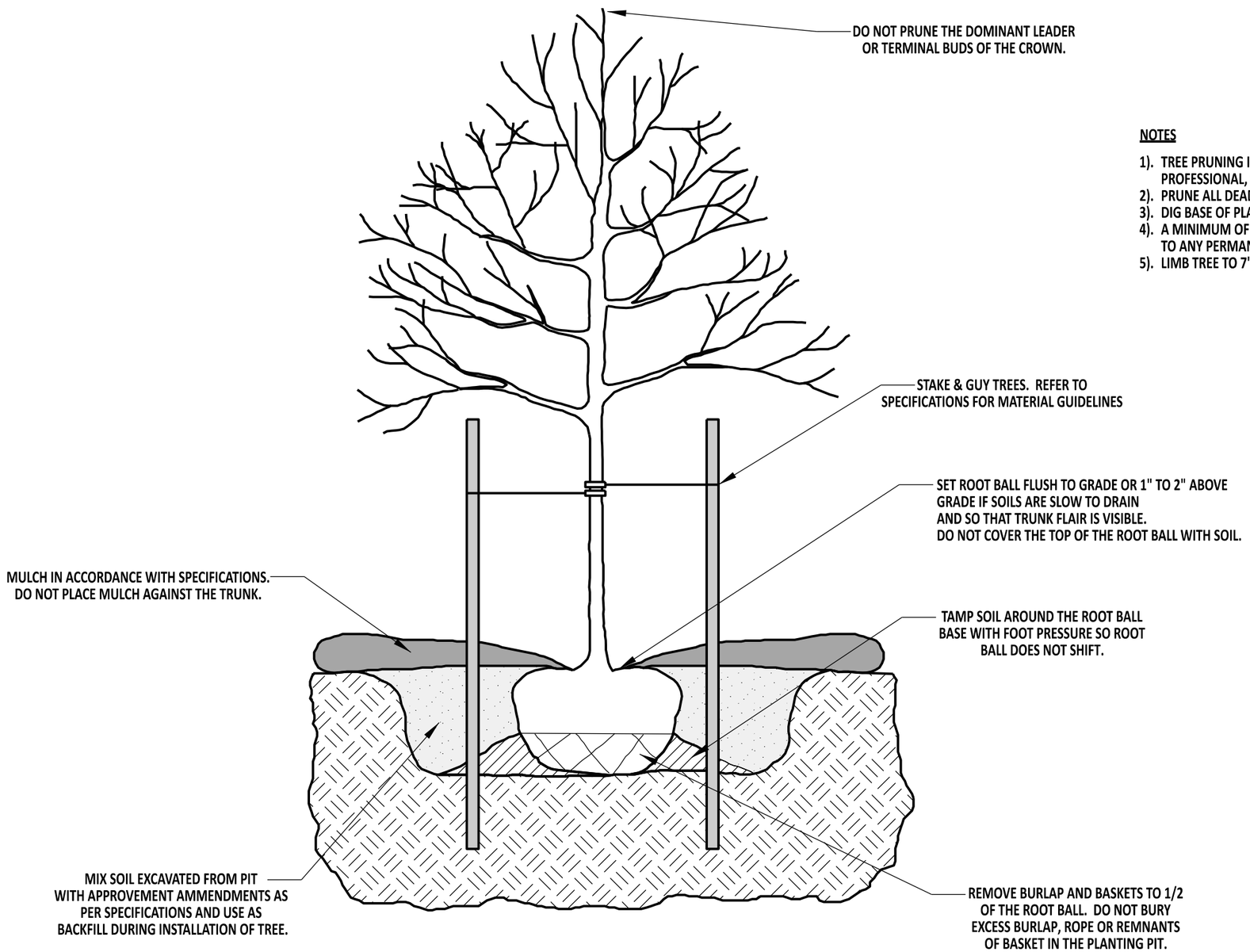


**TREE PLANTING DETAIL**

NOTES

1). TREE PRUNING IS TO BE PERFORMED BY AN I.S.A. CERTIFIED ARBORIST, CERTIFIED NURSERY PROFESSIONAL, OR UNDER THE DIRECTION THEREOF. DO NOT HEAVILY PRUNE TREES AT PLANTING.
2). PRUNE ALL DEAD, BROKEN, & CROSSING BRANCHES FOLLOWING INSTALLATION.
3). DIG BASE OF PLANTING PIT A MINIMUM OF TWO AND A MAXIMUM THREE TIMES THE SIZE OF THE ROOT BALL.
4). A MINIMUM OF 3'-0" IS REQUIRED FROM THE MIDDLE OF THE TREE TO ANY PERMANENT STRUCTURE (I.E. CURB, SIDEWALK, BUILDING, ETC...)
5). LIMB TREE TO 7'-0" FOR PEDESTRIAN CLEARANCE WHEN PLANTING ADJACENT TO SIDEWALKS.

| | | | | | |
|---|---|---|---|---|---|
| DELAWARE DEPARTMENT OF TRANSPORTATION | PLANTING DETAILS | | | APPROVED | SIGNATURE ON FILE (CHIEF ENGINEER) — 5/31/2017 (DATE) |
| | STANDARD NO. L-1 (2017) | SHT. 2 OF 3 | | RECOMMENDED | SIGNATURE ON FILE (DESIGN ENGINEER) — 5/18/2017 (DATE) |

5/11/2017

SCALE : NTS

NOTE:
1). SEE PLANT LIST FOR SPACING (X).

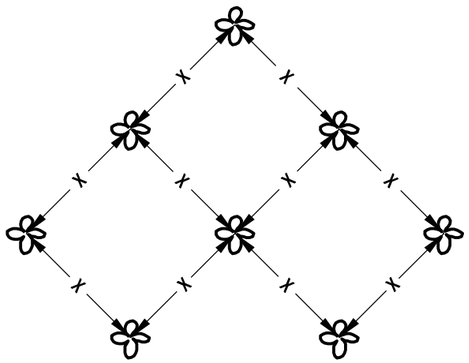


PLAN VIEW

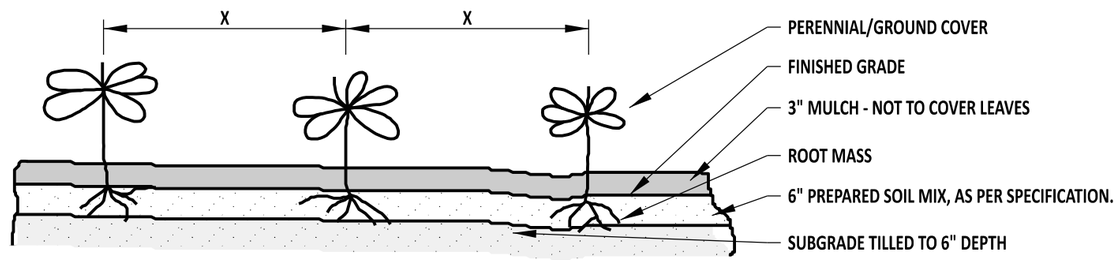


SECTION VIEW

PERENNIAL/GROUNDCOVER PLANTING DETAIL

| | | | | | |
|---|---|---|---|---|---|
| DELAWARE DEPARTMENT OF TRANSPORTATION | PLANTING DETAILS | | | APPROVED | SIGNATURE ON FILE (CHIEF ENGINEER) — 5/31/2017 (DATE) |
| | STANDARD NO. L-1 (2017) | SHT. 3 | OF 3 | RECOMMENDED | SIGNATURE ON FILE (DESIGN ENGINEER) — 5/18/2017 (DATE) |

5/11/2017

NOTES :
1). LONGITUDINAL STEEL SHALL BE HELD IN PLACE BY CRADLES.
2). LETTERS ON CONCRETE MONUMENT TO BE COUNTERSUNK IN TOP OF MARKER ¼".
3). FLEXIBLE DELINEATORS ARE ONLY TO BE USED ON ROADS WITH A SPECIFIED DENIAL OF ACCESS OR CLASSIFIED AS MINOR ARTERIALS OR HIGHER. ON ALL OTHER ROAD CLASSIFICATIONS, A WOODEN STAKE SHALL BE PLACED WITH "ROW" HANDWRITTEN VERTICALLY IN 1" TALL LETTERS.
4). PLACE CAP ON CONCRETE MONUMENT SO THAT TOP OF CAP IS FLUSH WITH THE TOP OF THE CONCRETE MONUMENT.
5). IN HOT-MIX OR CONCRETE, PLACE A CONCRETE SURVEY MARKER IN LIEU OF A REBAR AND CAP. SEE REBAR AND CAP ITEM SPECIFICATION FOR MORE INFORMATION.

SCALE : NTS

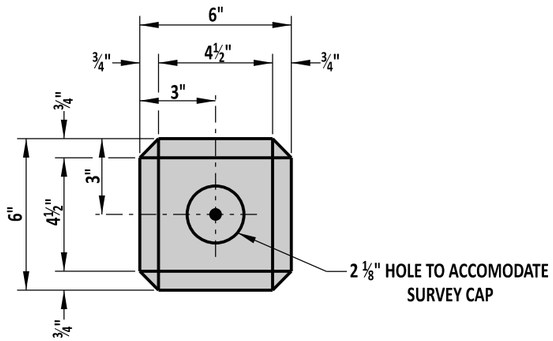


TOP

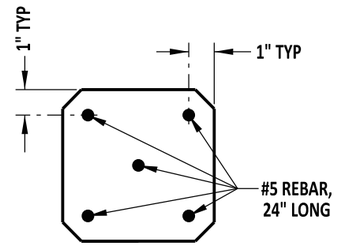


SECTION A-A

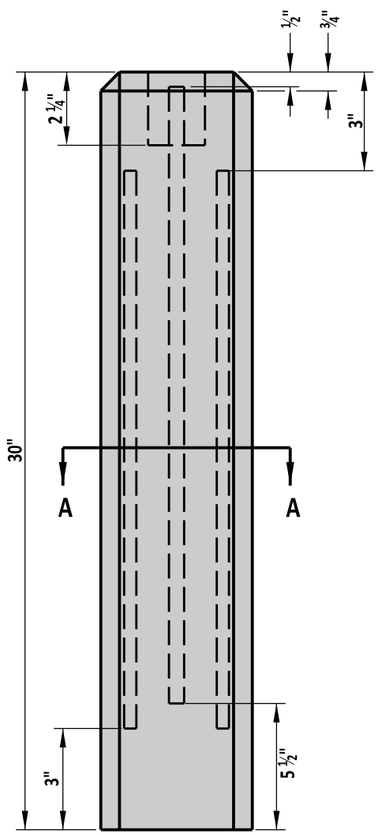


ELEVATION

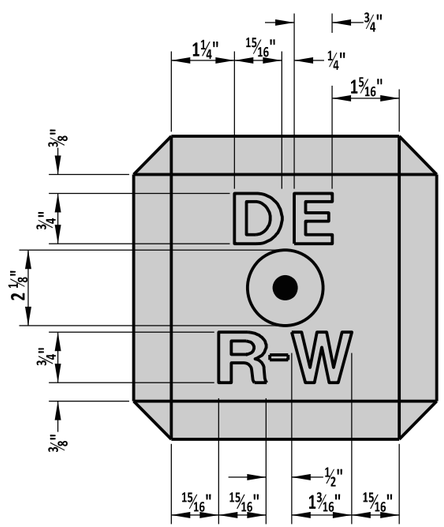


TOP DETAIL

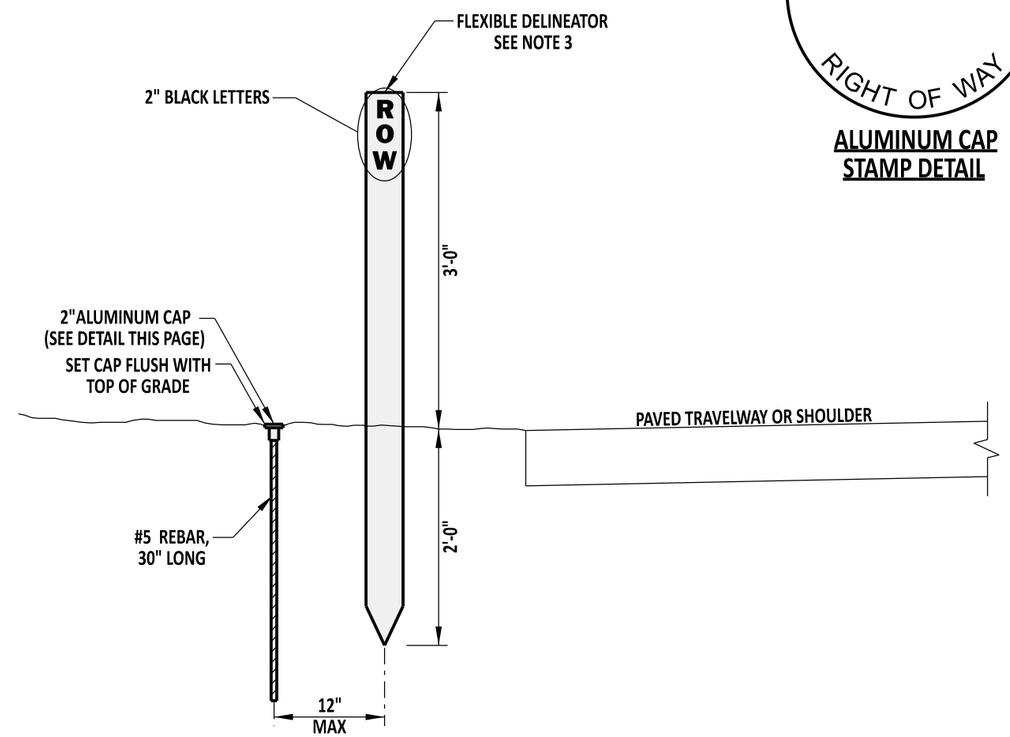


REBAR AND CAP WITH FLEXIBLE DELINEATOR DETAIL

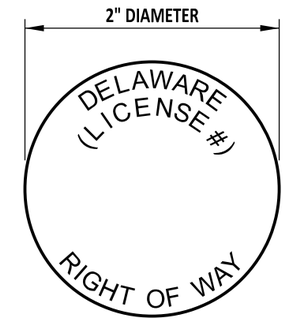


ALUMINUM CAP STAMP DETAIL

| | | | | | |
|---|---|---|---|---|---|
| DELAWARE DEPARTMENT OF TRANSPORTATION | RIGHT OF WAY MONUMENTATION | | | APPROVED | SIGNATURE ON FILE (CHIEF ENGINEER) — 5/31/2017 (DATE) |
| | STANDARD NO. M-2 (2017) | SHT. 1 OF 1 | | RECOMMENDED | SIGNATURE ON FILE (DESIGN ENGINEER) — 5/18/2017 (DATE) |

5/11/2017

SCALE : NTS

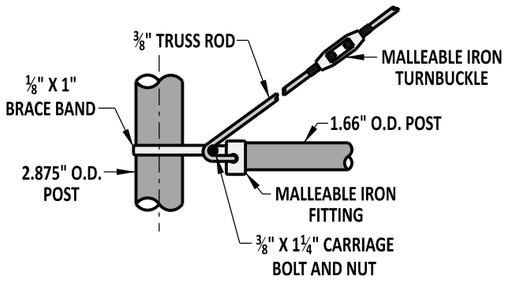


## TRUSS ROD ATTACHMENT

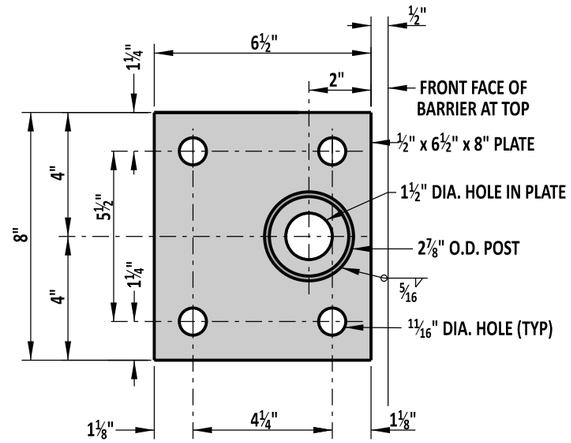


## DETAIL 'A'

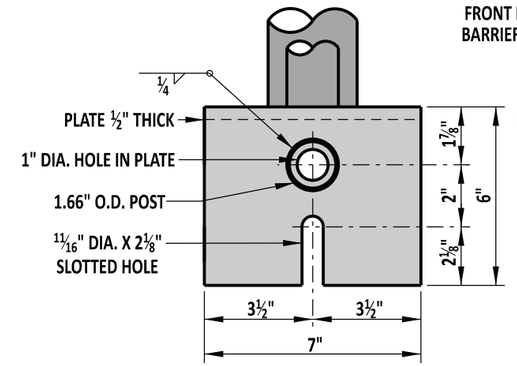


## SIDE VIEW

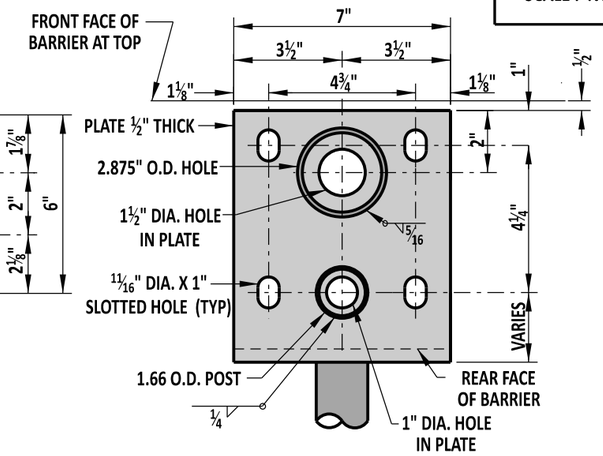


## PLAN VIEW

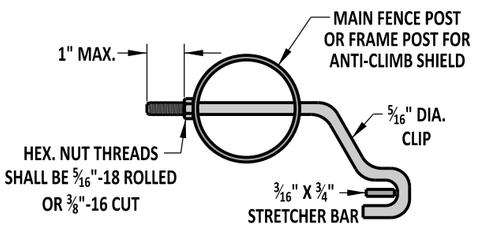


## STRETCHER BAR ATTACHMENT

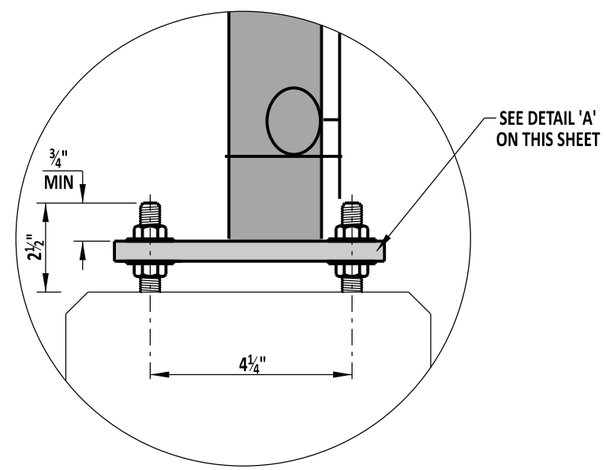


## POST TO BARRIER CONNECTION 'A'

TYPICAL CONNECTION FOR POSTS WITHOUT ANTI-CLIMB SHIELD

## DETAIL 'B'

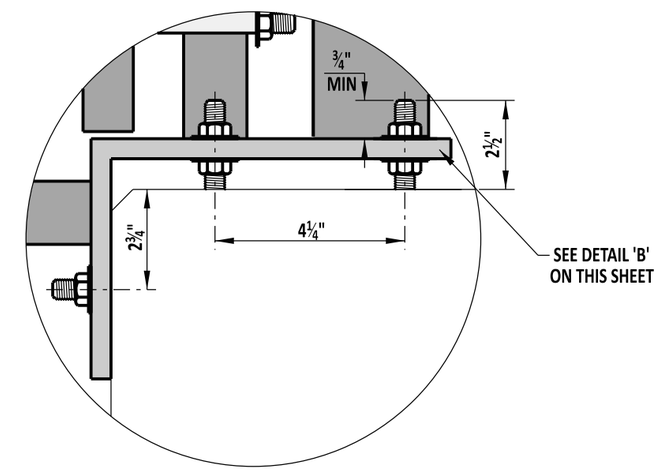


## POST TO BARRIER CONNECTION 'B'

TYPICAL CONNECTION FOR POSTS WITH ANTI-CLIMB SHIELD

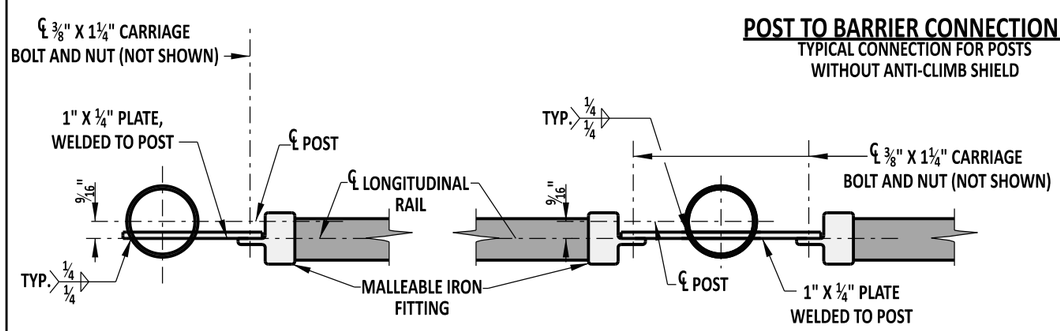


## TOP LONGITUDINAL RAIL-POST ATTACHMENT

NOTES:

1). POST SPACING - POST SPACING TO BE DETERMINED BY THE CONTRACTOR AND INCLUDED IN THE WORKING DRAWINGS. EACH POST MUST BE A MINIMUM OF 1'-0" FROM ANY PARAPET JOINT.

2). WORKING DRAWINGS - WORKING DRAWINGS WILL BE SUBMITTED BY THE CONTRACTOR TO THE ENGINEER FOR REVIEW

| | | | | |
|---|---|---|---|---|
| DELAWARE DEPARTMENT OF TRANSPORTATION | BRIDGE SAFETY FENCE | | APPROVED | SIGNATURE ON FILE (CHIEF ENGINEER) — 5/31/2017 (DATE) |
| | STANDARD NO. M-10 (2017) | SHT. 3 OF 3 | RECOMMENDED | SIGNATURE ON FILE (DESIGN ENGINEER) — 5/18/2017 (DATE) |

5/11/2017

SCALE : NTS

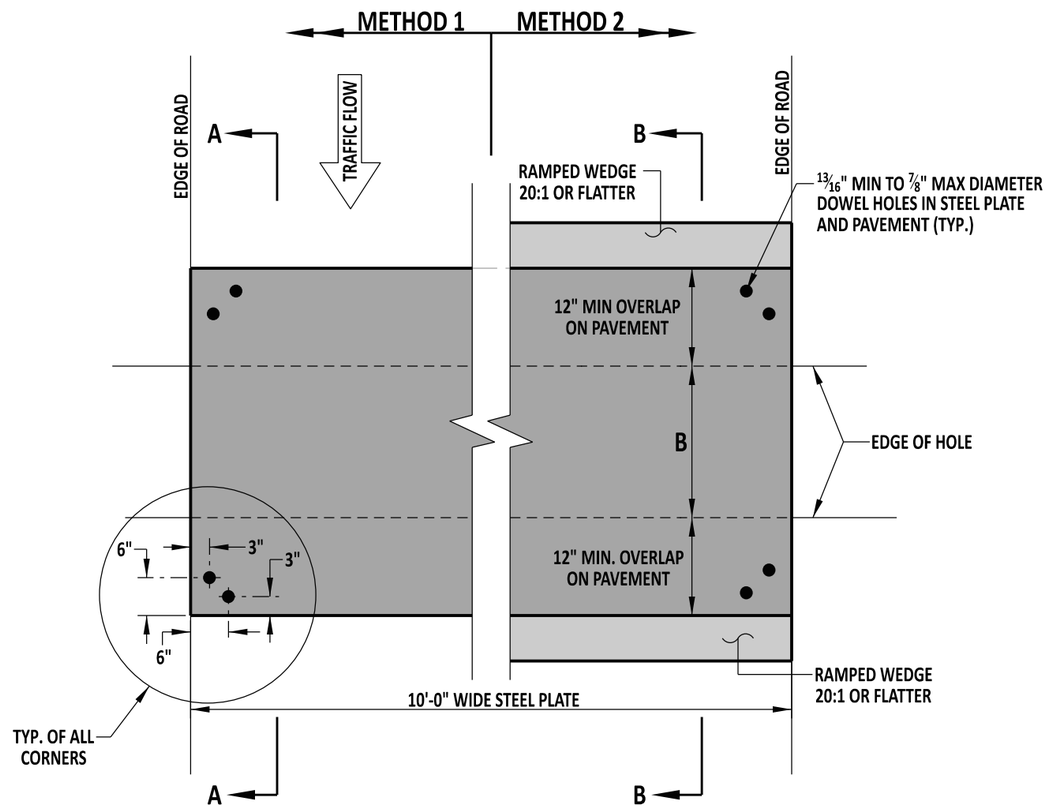


PLAN VIEW

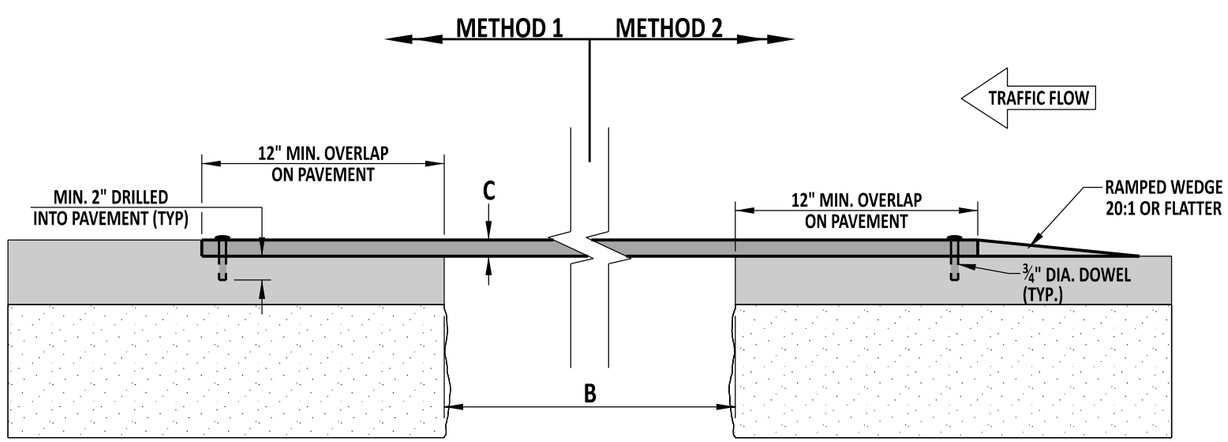


SECTION A-A

SECTION B-B

| B | C |
|---|---|
| TRENCH WIDTH | MIN. PLATE THICKNESS |
| 1'-0" | 1/2" |
| 2'-0" | 3/4" |
| 3'-0" | 7/8" |
| 4'-0" | 1" |
| 5-'0" | 1 1/8" |
| 6'-0" | 1 1/4" |

BASED ON HL-93 TRUCK LOAD

NOTES:

1. USE OF STEEL PLATES MUST BE APPROVED BY THE DEPARTMENT AND IS NOT PERMITTED BETWEEN NOVEMBER 1ST AND MARCH 31ST.
2. STEEL PLATE BRIDGING ON FREEWAYS AND EXPRESSWAYS IS STRICTLY PROHIBITED.
3. STEEL PLATES AND DOWELS WILL CONFORM TO ASTM A36 STANDARDS.
4. ADEQUATELY SHORE THE TRENCH IN ACCORDANCE WITH THE STANDARD SPECIFICATIONS TO SUPPORT THE BRIDGING AND TRAFFIC LOADS.
5. SECURE BRIDGING AGAINST DISPLACEMENT BY USING ADJUSTABLE CLEATS, SHIMS, OR OTHER DEVICES.
6. USE OF STEEL PLATE BRIDGING IS NOT TO EXCEED FOUR (4) CONSECUTIVE WORKING DAYS IN ANY GIVEN WEEK AND NOT LEFT IN PLACE OVER THE WEEKEND, UNLESS DIRECTED BY THE ENGINEER IN THE FIELD.
7. THE CONTRACTOR IS RESPONSIBLE FOR MAINTENANCE OF STEEL PLATES, SHORING, ASPHALT CONCRETE RAMPS, AND ENSURING THEY MEET ALL MINIMUM SPECIFICATIONS. DEFORMATIONS OF ANY KIND ARE NOT ACCEPTABLE ON STEEL PLATES. EXAMPLES OF DEFORMATIONS COULD BE, BUT NOT LIMITED TO, ANY OF THE FOLLOWING: FREE FROM ANY CLIPS, CHAINS, ATTACHMENTS, WELDMENTS, SURFACE IRREGULARITIES, ETC.
8. A STRUCTURE DESIGN IS REQUIRED FOR TRENCH WIDTHS GREATER THAN 6'-0". DESIGN WILL BE APPROVED BY DEPARTMENT PRIOR TO USE.
9. INSTALL STEEL PLATE BRIDGING AND SHORING USING EITHER OF THE METHODS BELOW:
   METHOD 1: FOR SPEEDS GREATER THAN 45 MPH, MILL THE PAVEMENT TO A DEPTH EQUAL TO THE THICKNESS OF THE PLATE AND TO A WIDTH AND LENGTH EQUAL TO THE DIMENSION OF THE PLATE. BUTT SUBSEQUENT PLATES TO EACH OTHER. ATTACH THE PLATE TO THE ROADWAY BY A MINIMUM OF TWO DOWELS PRE-DRILLED INTO EACH CORNER OF THE PLATE AND DRILLED 2" INTO THE PAVEMENT AS SHOWN ON THIS DETAIL.
   METHOD 2: FOR SPEEDS 45 MPH OR LESS, ATTACH THE PLATE TO THE ROADWAY BY A MINIMUM OF TWO DOWELS PRE-DRILLED INTO EACH CORNER OF THE PLATE AND DRILLED 2"INTO THE PAVEMENT AS SHOWN IN ON THIS DETAIL. BUTT SUBSEQUENT PLATES TO EACH OTHER. USE COMPACTED BITUMINOUS TEMPORARY ROADWAY MATERIAL (TRM) TO FORM A RAMPED WEDGE WITH A MAXIMUM SLOPE OF 5% AND A MINIMUM TAPER LENGTH OF 20" TO COVER ALL EDGES OF STEEL PLATES.
10. FOR BOTH METHODS, WHEN THE STEEL PLATES ARE REMOVED, BACKFILL THE DOWEL HOLES IN THE PAVEMENT WITH EITHER GRADED FINES OF ASPHALT CONCRETE MIX, CONCRETE SLURRY,OR EQUIVALENT SLURRY TO THE SATISFACTION OF THE ENGINEER.
11. STEEL PLATES MUST HAVE A SURFACE THAT IS MANUFACTURED WITH A MINIMUM NOMINAL COEFFICIENT OF FRICTION OF 0.35 AT THE TIME OF PLACEMENT.

| | | | | |
|---|---|---|---|---|
| DELAWARE DEPARTMENT OF TRANSPORTATION | STEEL PLATE | | APPROVED | SIGNATURE ON FILE (CHIEF ENGINEER) — 5/31/2017 (DATE) |
| | STANDARD NO. M-11 (2017) | SHT. 1 OF 1 | RECOMMENDED | SIGNATURE ON FILE (DESIGN ENGINEER) — 5/18/2017 (DATE) |

5/11/2017

SCALE : NTS

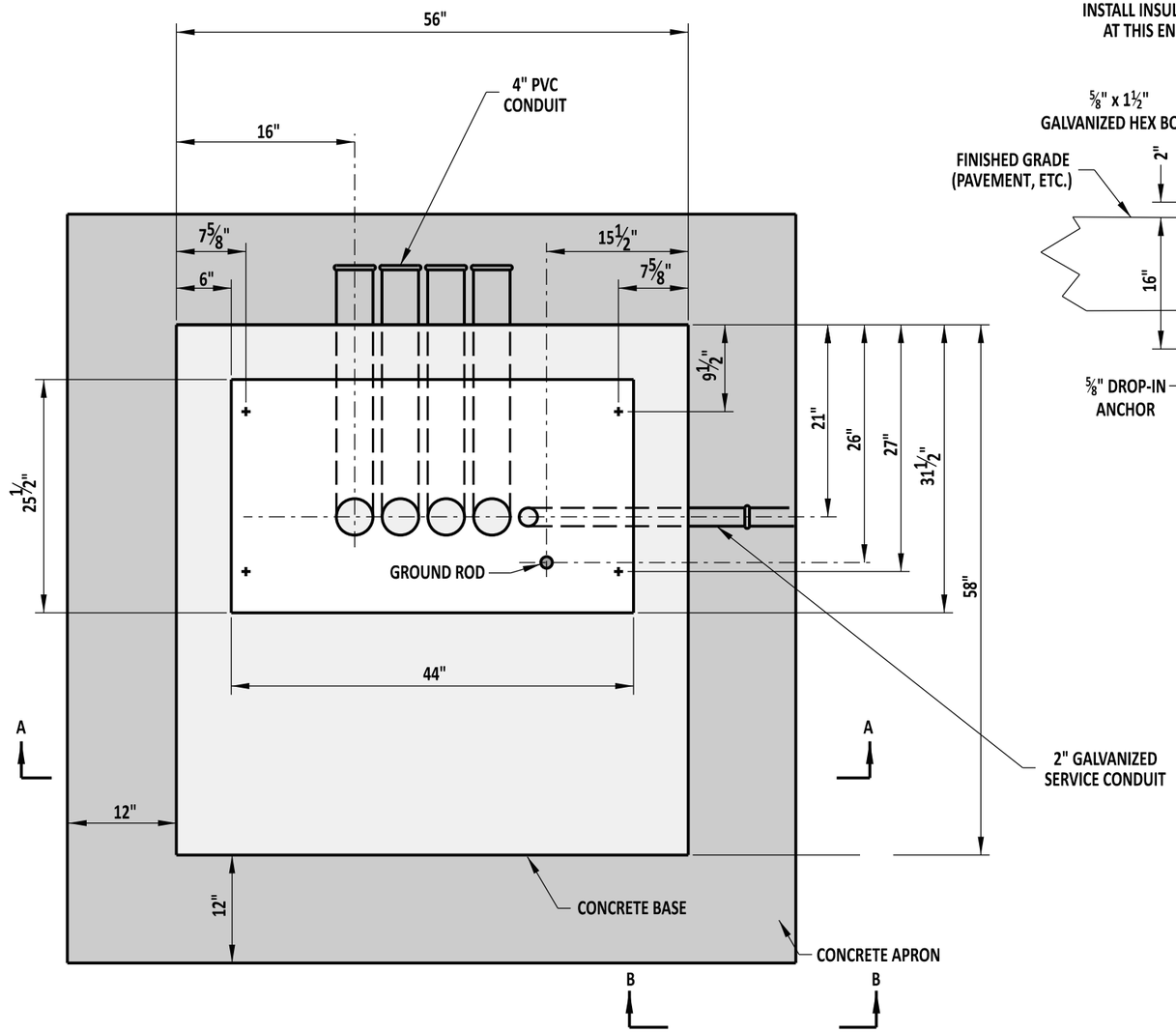


"P & R" CABINET
PLAN VIEW

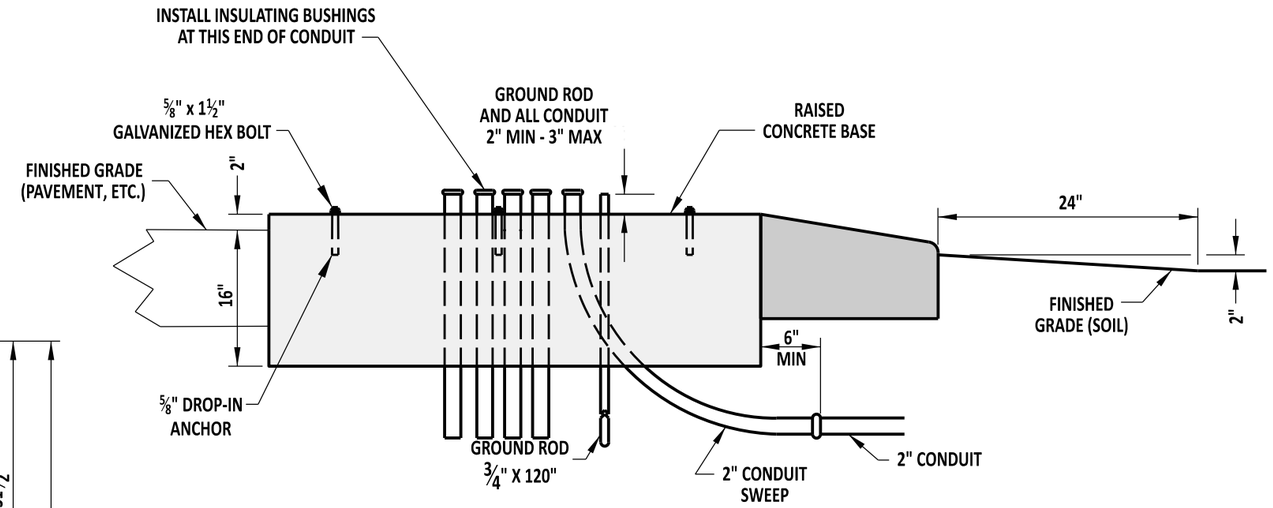


SECTION A-A

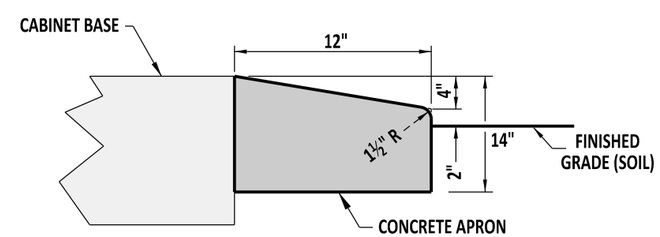


SECTION B-B

NOTE:
1). CONCRETE APRON IS REQUIRED ONLY WHEN CABINET BASE IS INSTALLED IN EARTH AREAS OR AS DIRECTED ON PLAN.
2). CONDUITS SHALL BE EVENLY SPACED, WITH MINIMUM 2" WIDTH ESTABLISHED BETWEEN ALL CONDUITS.

| | | | | | |
|---|---|---|---|---|---|
| DELAWARE DEPARTMENT OF TRANSPORTATION | CABINET BASES, TYPES P & R | | | APPROVED | SIGNATURE ON FILE (CHIEF ENGINEER) — 5/31/2017 (DATE) |
| | STANDARD NO. T-4 (2017) | SHT. 2 OF 2 | | RECOMMENDED | SIGNATURE ON FILE (DESIGN ENGINEER) — 5/18/2017 (DATE) |

5/11/2017

SCALE : NTS

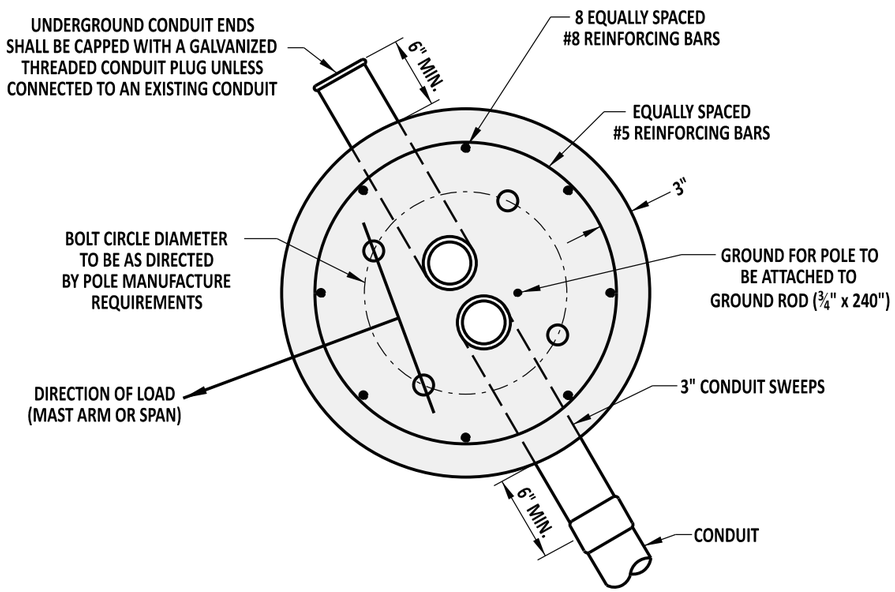


ROUND BASE

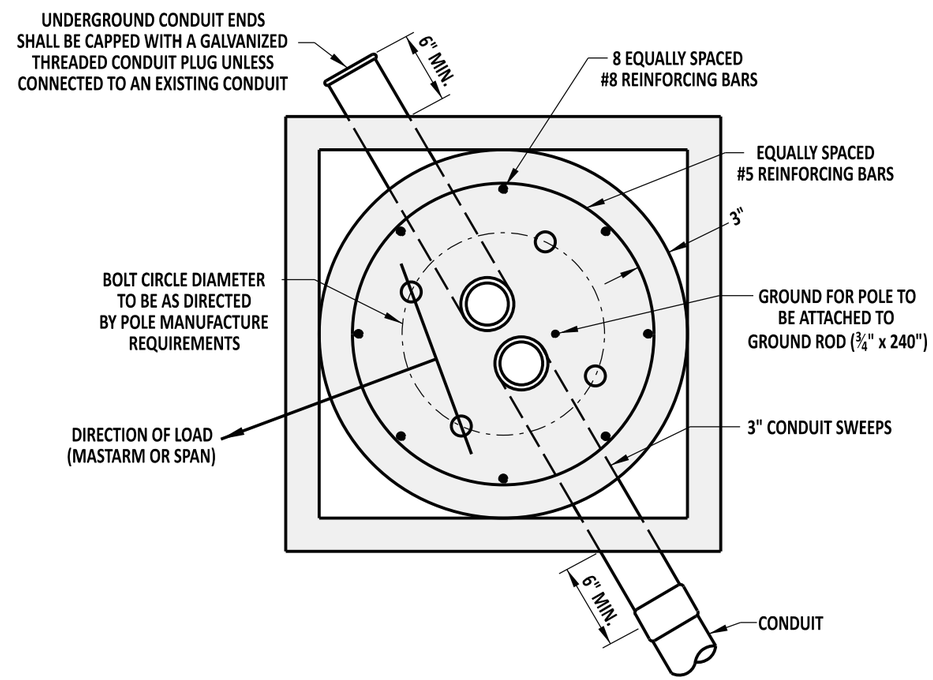


ROUND BASE w/ SQUARE FOUNDATION HEADER

NOTE: SQUARE FOUNDATION HEADER SHALL HAVE A 6" MINIMUM DEPTH.

| | | | | | |
|---|---|---|---|---|---|
| DELAWARE DEPARTMENT OF TRANSPORTATION | POLE BASES | | | APPROVED | SIGNATURE ON FILE (CHIEF ENGINEER) — 5/31/2017 (DATE) |
| | STANDARD NO. T-5 (2017) | SHT. 1 OF 4 | | RECOMMENDED | SIGNATURE ON FILE (DESIGN ENGINEER) — 5/18/2017 (DATE) |

6/13/2017

SCALE : NTS

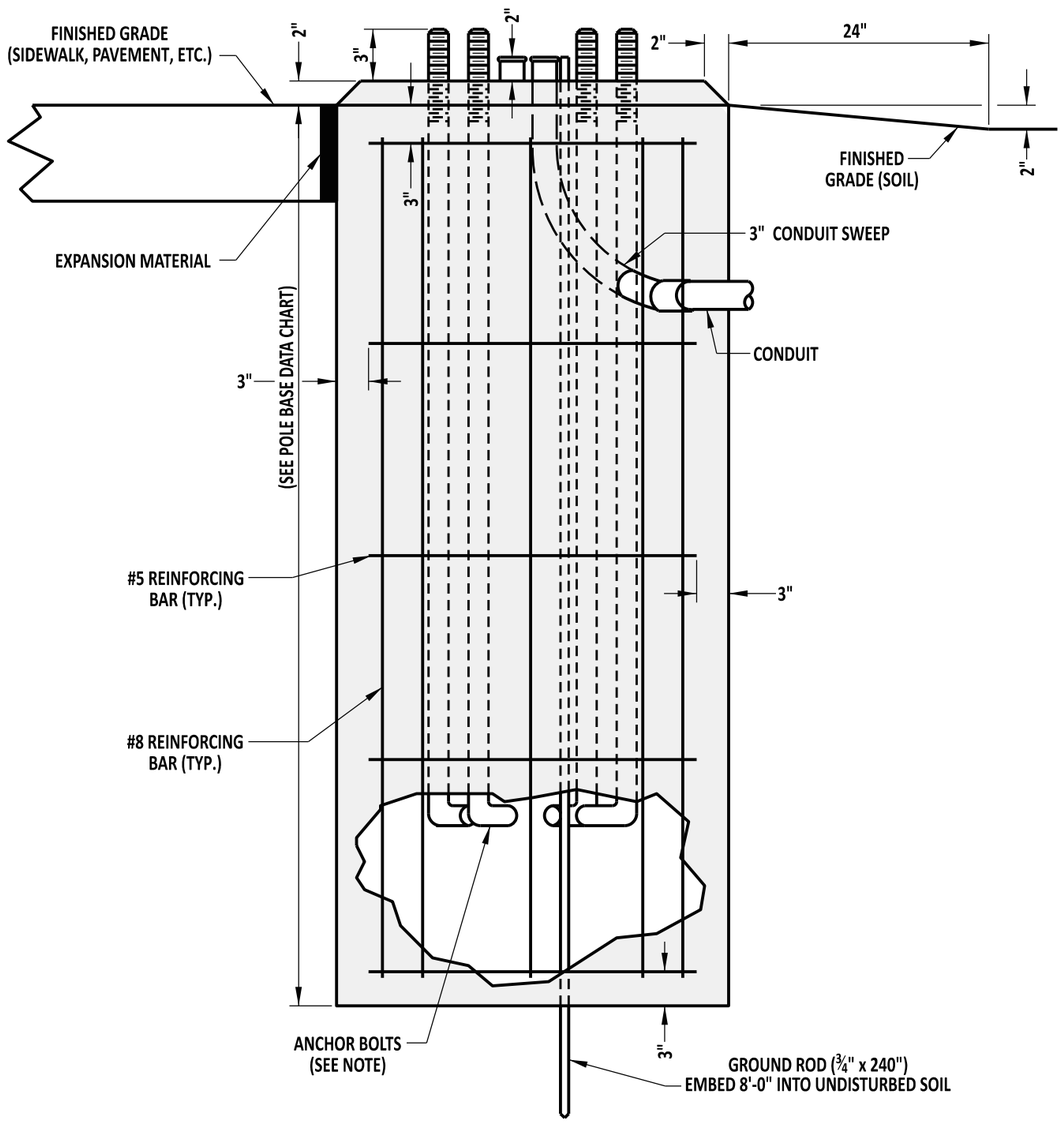


TYPICAL SECTION (BASE 6)

## POLE BASE DATA CHART

| POLE BASE TYPE # | DIAMETER | DEPTH | #5 HORIZONTAL REINFORCING BARS | #8 VERTICAL REINFORCING BARS | CONDUITS |
|---|---|---|---|---|---|
| 1 | 36" | 7'-0" | 5 | 8 | 2 - 3" |
| 2 | 36" | 10'-0" | 6 | 8 | 2 - 3" |
| 2A | 48" | 8'-0" | 5 | 8 | 2 - 3" |
| 2B | 60" | 7'-0" | 5 | 8 | 2 - 3" |
| 3 | 48" | 10'-0" | 14 | 17 | 2 - 3" |
| 3A | 48" | 12'-0" | 17 | 17 | 2 - 3" |
| 3B | 48" | 15'-0" | 21 | 17 | 2 - 3" |
| 3C | 48" | 20'-0" | 27 | 17 | 2 - 3" |
| 4A & 4B | 24" | 2'-4" | NONE | NONE | 2 - 2.5" |
| 6 | 24" | 6'-0" | 4 | 8 | 2 - 3" |

NOTE:
ANCHOR BOLTS AND BOLT PATTERN FOR TYPES 5, 6, & 7 POLE BASES TO BE PROVIDED BY THE MANUFACTURER.

| | | | | | |
|---|---|---|---|---|---|
| DELAWARE DEPARTMENT OF TRANSPORTATION | POLE BASES | | APPROVED | SIGNATURE ON FILE (CHIEF ENGINEER) | 5/31/2017 (DATE) |
| | STANDARD NO. T-5 (2017) | SHT. 3 OF 4 | RECOMMENDED | SIGNATURE ON FILE (DESIGN ENGINEER) | 5/18/2017 (DATE) |

6/13/2017