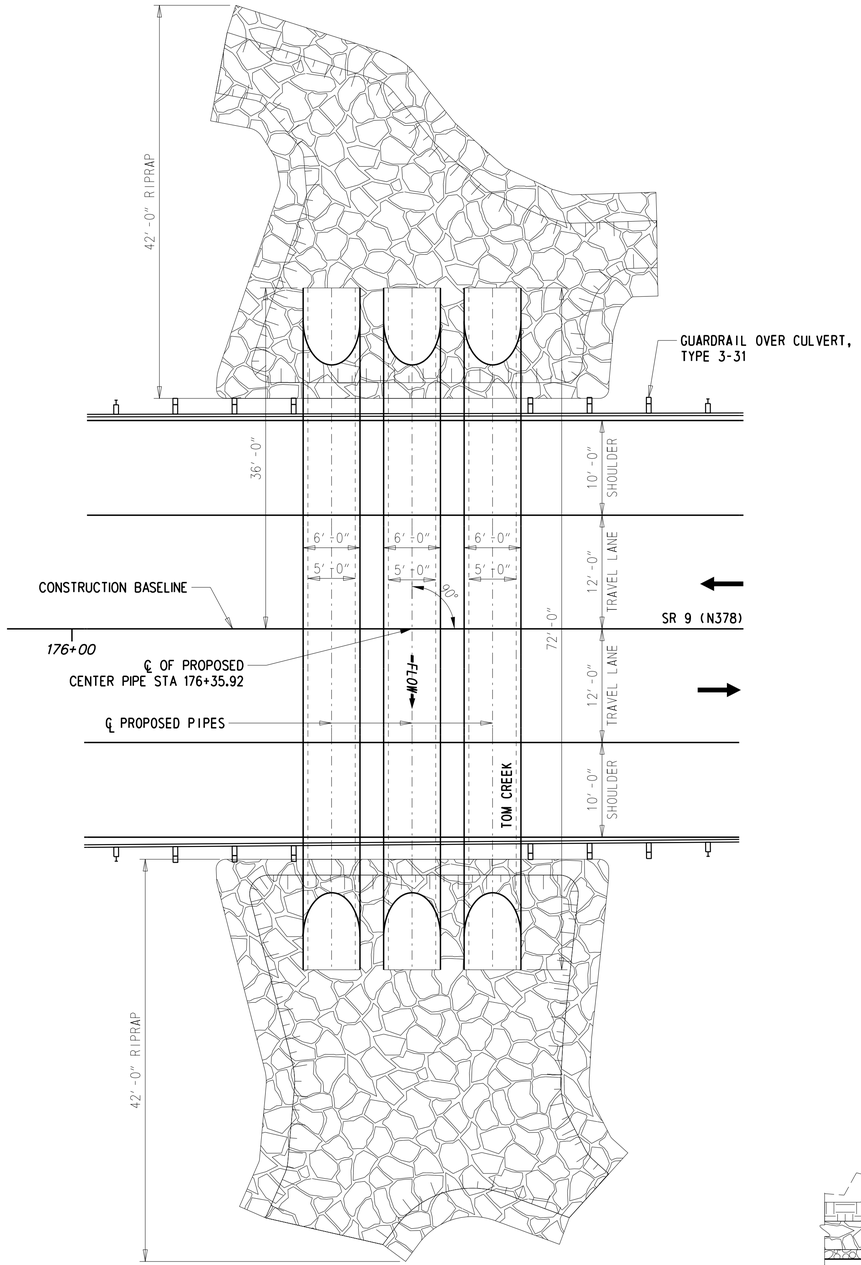

PLAN

1/8" = 1'-0"

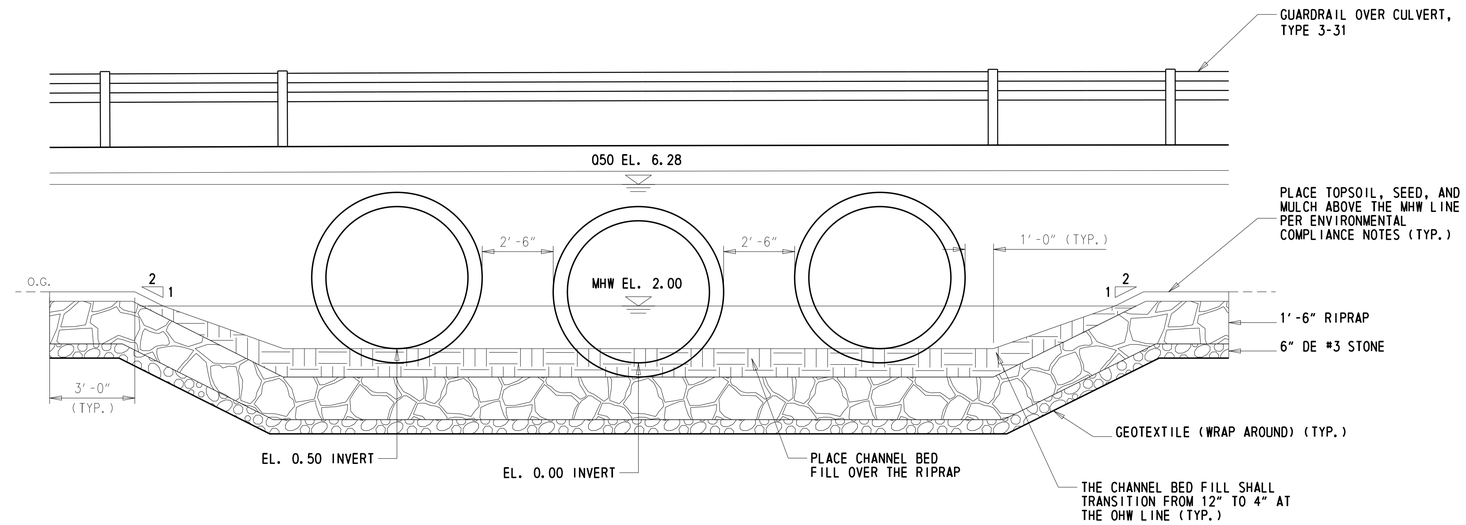

ELEVATION

3/8" = 1'-0"

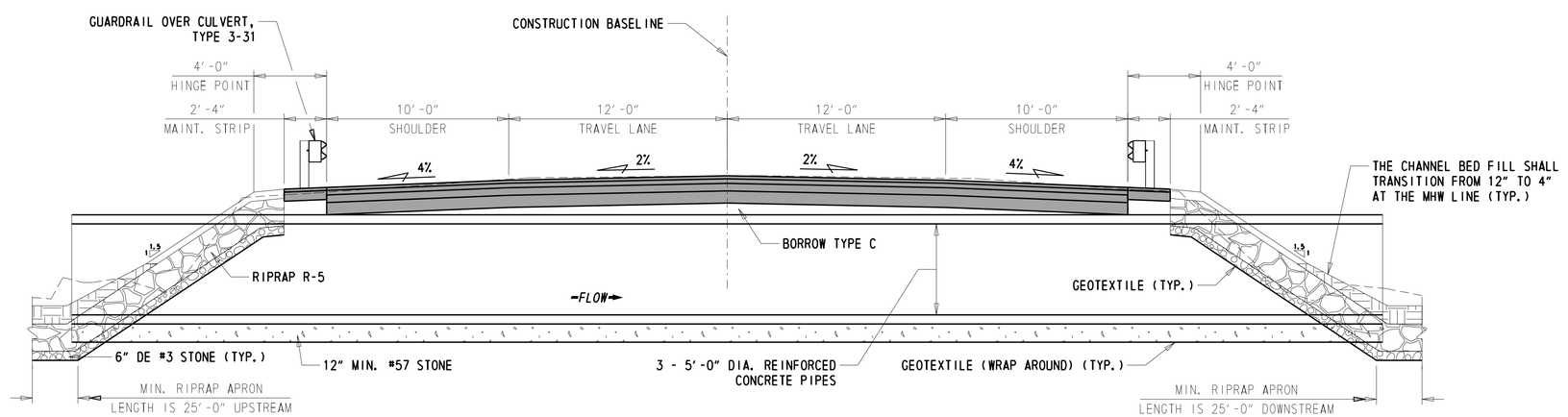

TYPICAL SECTION

1/4" = 1'-0"

Y:\NEWCASTL\378\BRIDGE\T201607103\500_CADD\530_PLANS_DGN\PE302.DGN

DELAWARE DEPARTMENT OF TRANSPORTATION	ADDENDUMS / REVISIONS	BRIDGE REPLACEMENTS ON SR9, BR 1-302 OVER TOM CREEK AND BR 1-304 OVER GAMBLE GUT	CONTRACT T201607103	BRIDGE NO. 1-302	BRIDGE PLAN, SECTION AND ELEVATION	SHEET NO. 11
			COUNTY NEW CASTLE	DESIGNED BY: SR		TOTAL SHTS. 26
				CHECKED BY: JAT		

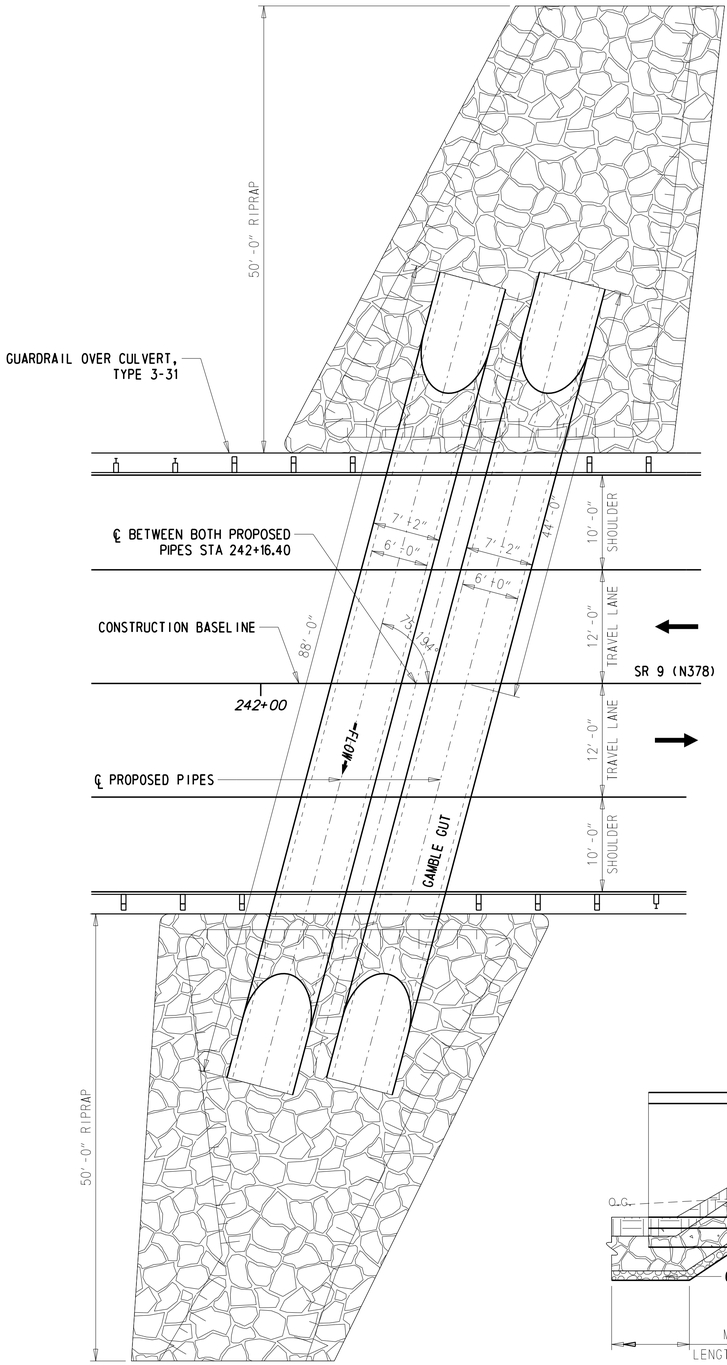

PLAN

1/8" = 1'-0"

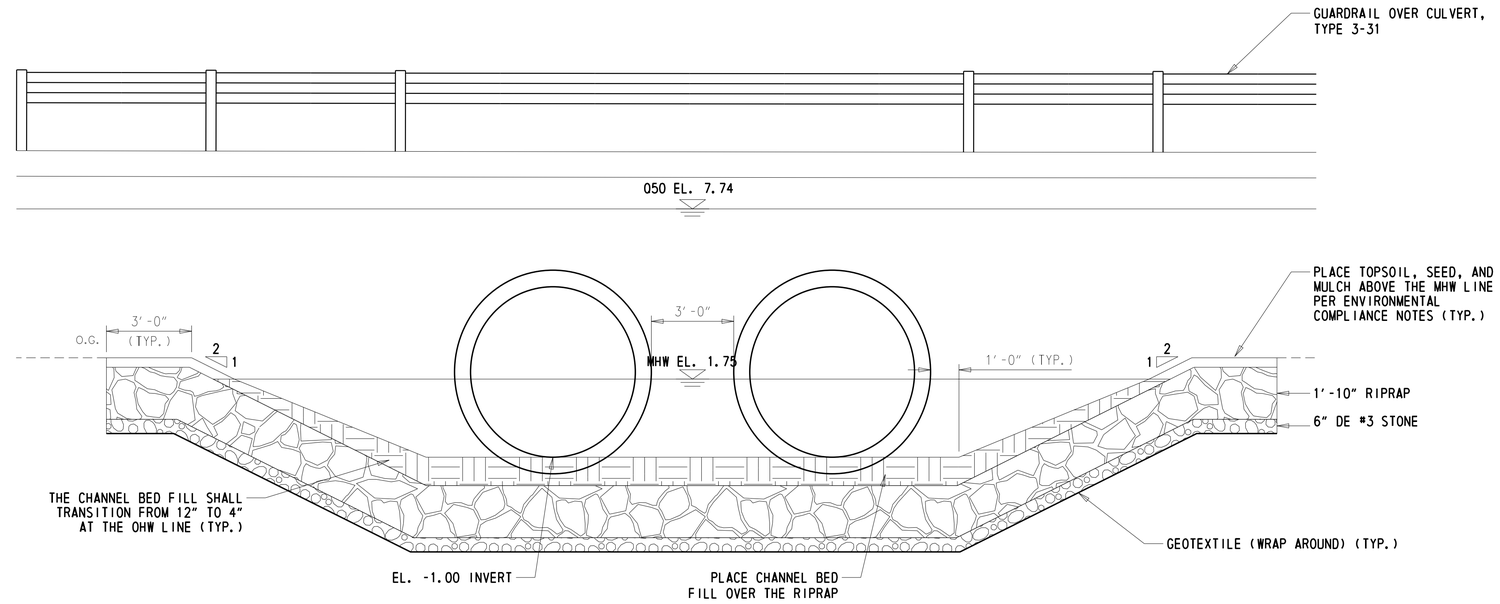

ELEVATION

3/8" = 1'-0"

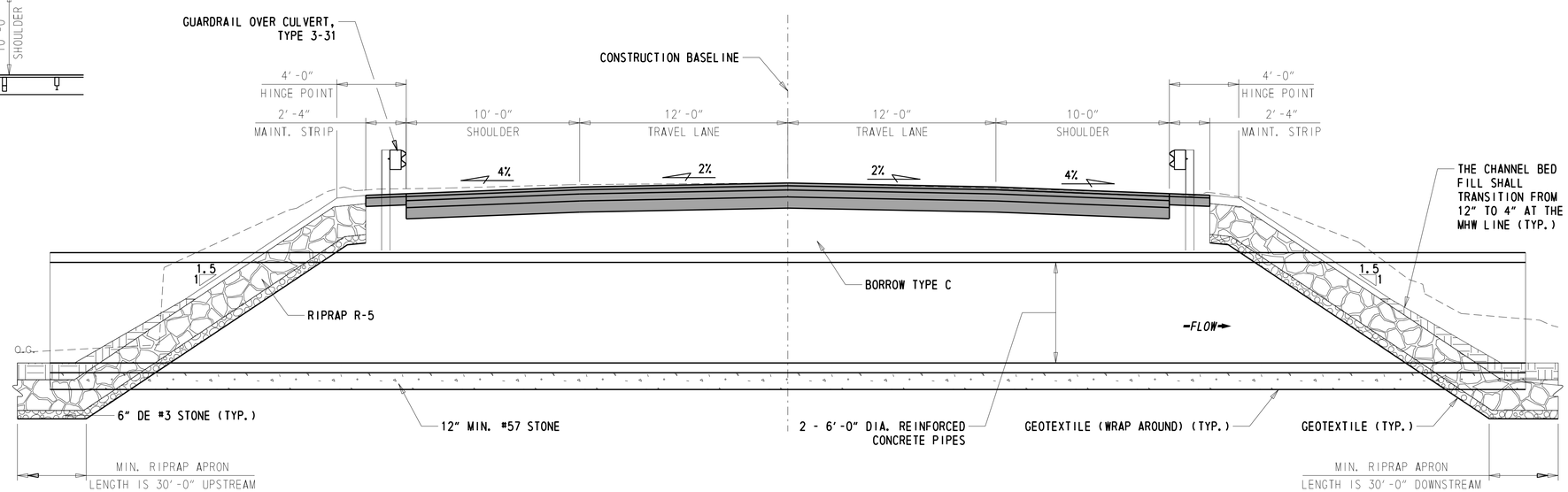

TYPICAL SECTION

1/4" = 1'-0"

Y:\NEWCASTL\378\BRIDGE\T201607103\500_CADD\530_PLANS_DGN\PE304.DGN

DELAWARE DEPARTMENT OF TRANSPORTATION	ADDENDUMS / REVISIONS	BRIDGE REPLACEMENTS ON SR9, BR 1-302 OVER TOM CREEK AND BR 1-304 OVER GAMBLE GUT	CONTRACT T201607103	BRIDGE NO. 1-304	BRIDGE PLAN, SECTION AND ELEVATION	SHEET NO. 12
			COUNTY NEW CASTLE	DESIGNED BY: SR		TOTAL SHTS. 26
				CHECKED BY: JAT		