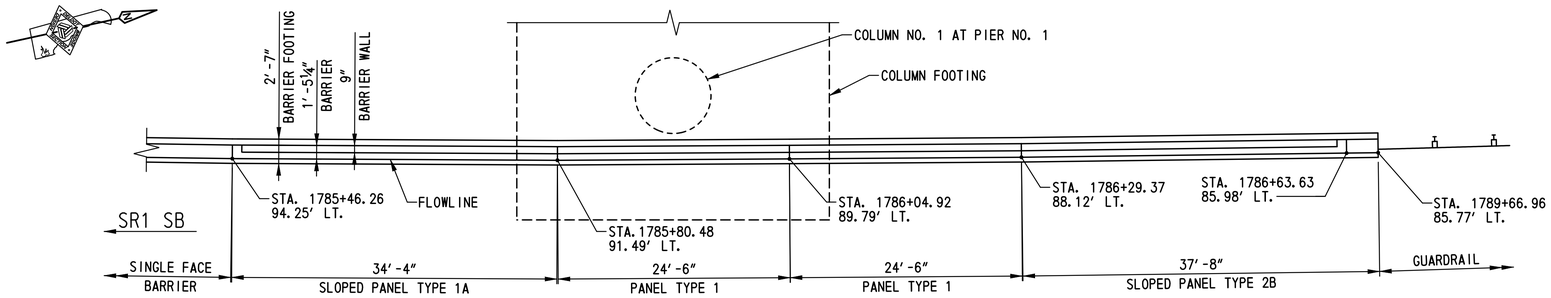

BARRIER WALL I - PLAN

SCALE: ⅛"=1'-0"

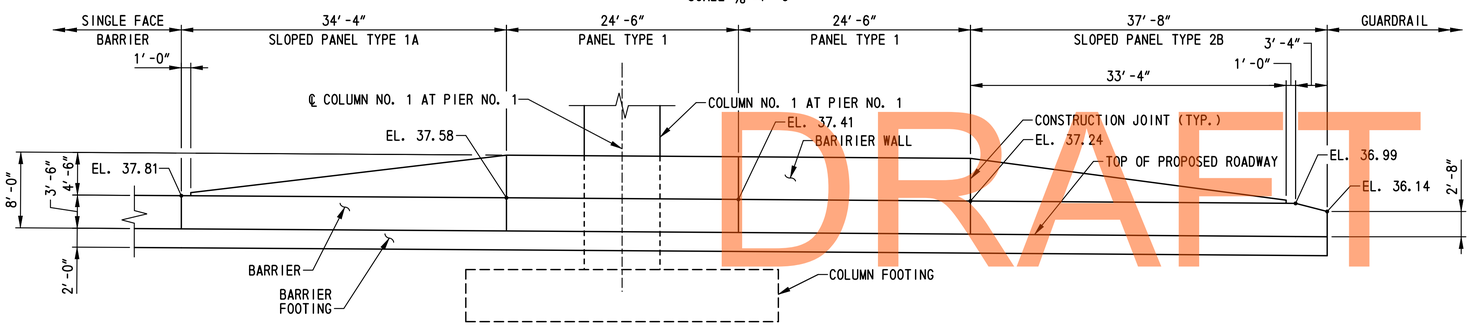

BARRIER WALL I - ELEVATION

SCALE: ⅛"=1'-0"

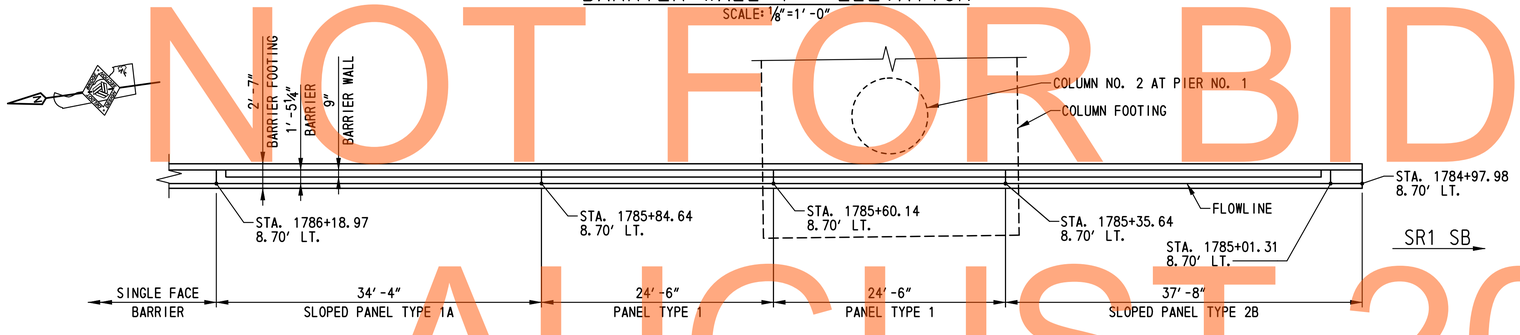

BARRIER WALL II - PLAN

SCALE: ⅛"=1'-0"

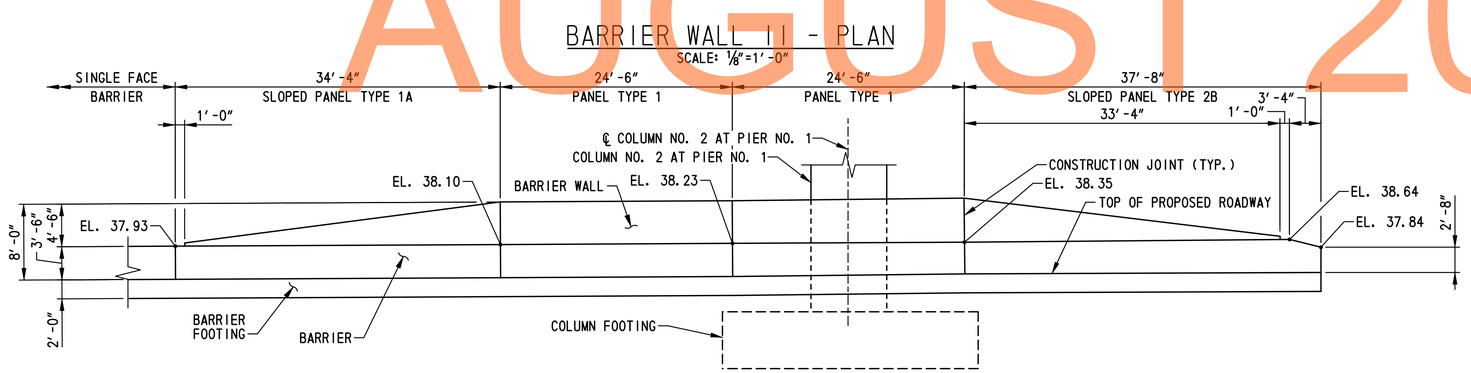

BARRIER WALL II - ELEVATION

SCALE: ⅛"=1'-0"

DRAFT
NOT FOR BIDDING
AUGUST 2015

BARRIER WALL NOTES:

1. PAYMENT FOR CONSTRUCTION OF BARRIER, BARRIER FOOTING AND BARRIER WALL WILL BE MADE UNDER ITEM NO. 602001 - PORTLAND CEMENT CONCRETE MASONRY, CLASS A. PAYMENT FOR EXCAVATION WILL BE INCIDENTAL TO THIS ITEM.
2. PAYMENT FOR EPOXY COATED REINFORCEMENT WILL BE MADE UNDER ITEM NO. 604000 - BAR REINFORCEMENT, EPOXY COATED.
3. PANEL DIMENSIONS MEASURED ALONG FLOWLINE OF BARRIER.
4. THE FOOTING REAR VERTICAL WALL SHALL BE FORMED OR THE CONCRETE PLACED AGAINST THE VERTICAL EARTH SIDE IF APPROVED BY THE ENGINEER. NO ADDITIONAL COMPENSATION FOR ADDITIONAL CONCRETE WILL BE PAID IF THE CONCRETE IS PLACED AGAINST THE EARTH.
5. THE CONTRACTOR SHALL ATTACH THE YELLOW AND/OR WHITE REFLECTORS TO THE BARRIERS AS SHOWN IN THE DETAIL ON DWG. NO. DT-05. PAYMENT FOR THE REFLECTORS SHALL BE IN ACCORDANCE WITH ITEM NOS. 720544 AND 720545 AS APPROPRIATE.
6. FOR PIER LOCATION, SEE DWG. NOS. BR1-3 PE-01 AND BR1-3 PE-02.
7. FOR BARRIER WALL DETAILS, SEE DWG. NOS. DT-28 THRU DT-31.
8. PIER FOOTING PILES NOT SHOWN FOR CLARITY.
9. PRIOR TO PLACING BARRIER WALL CONCRETE ADJACENT TO EXISTING CONCRETE PAVEMENT, OR PRIOR TO PLACING CONCRETE PAVEMENT ADJACENT TO EXISTING BARRIER CONCRETE, AN APPROVED BOND BREAKER SHALL BE APPLIED TO THE EXISTING CONCRETE VERTICAL FACE. THIS LONGITUDINAL JOINT AT THE INTERFACE BETWEEN THE CONCRETE PAVEMENT AND THE BARRIER WALL CONCRETE SHALL NOT BE SEALED. VERTICAL CRACKS IN THE EXISTING CONCRETE FACE SHALL BE COVERED OR SEALED AS APPROVED BY THE ENGINEER TO PREVENT INTRUSION OF THE NEW CONCRETE INTO THE EXISTING CONCRETE. ALL WORK SHALL BE INCIDENTAL TO ITEM NO. 602001 - PORTLAND CEMENT CONCRETE MASONRY, CLASS A.

DT-25

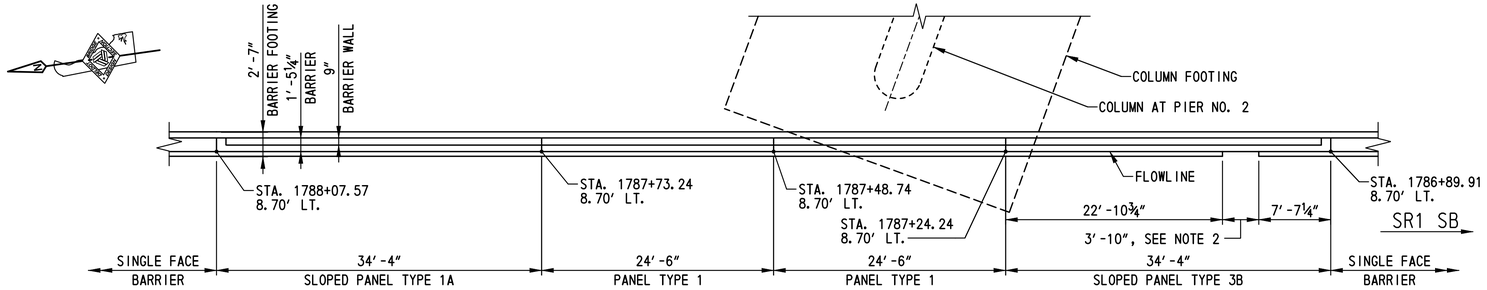

BARRIER WALL III - PLAN

SCALE: ⅛"=1'-0"

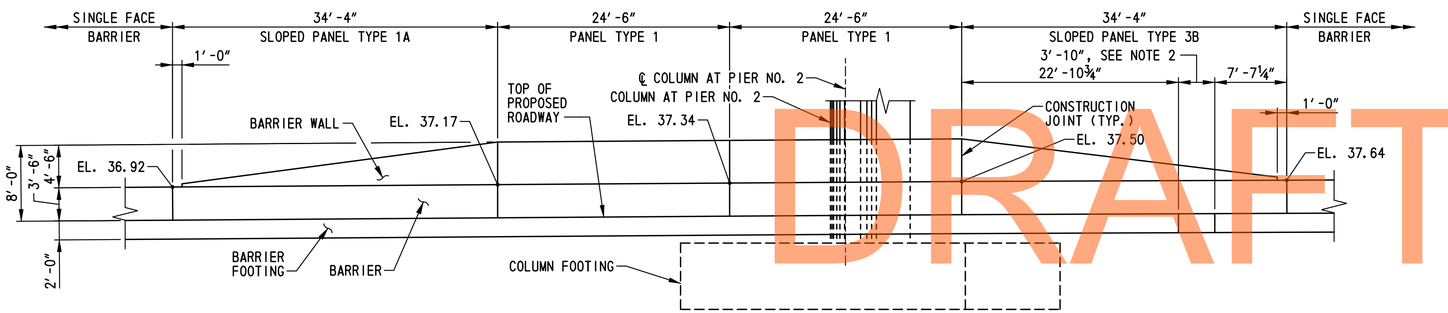

BARRIER WALL III - ELEVATION

SCALE: ⅛"=1'-0"

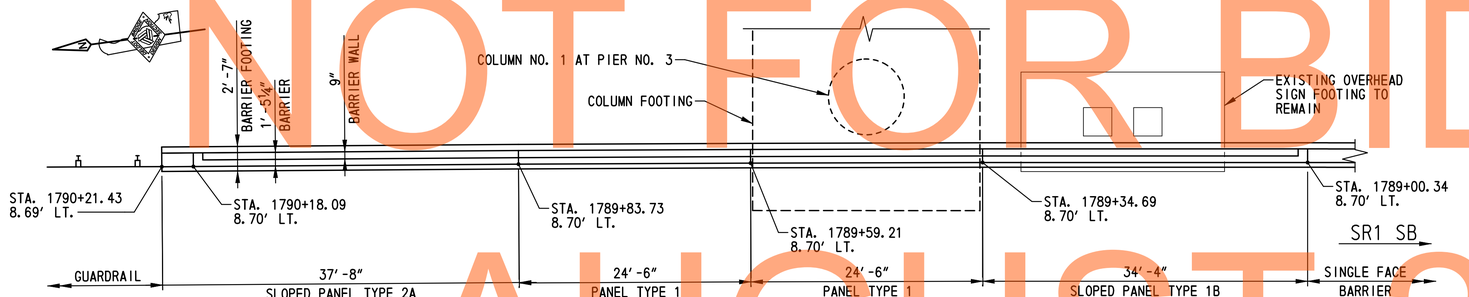

BARRIER WALL IV - PLAN

SCALE: ⅛"=1'-0"

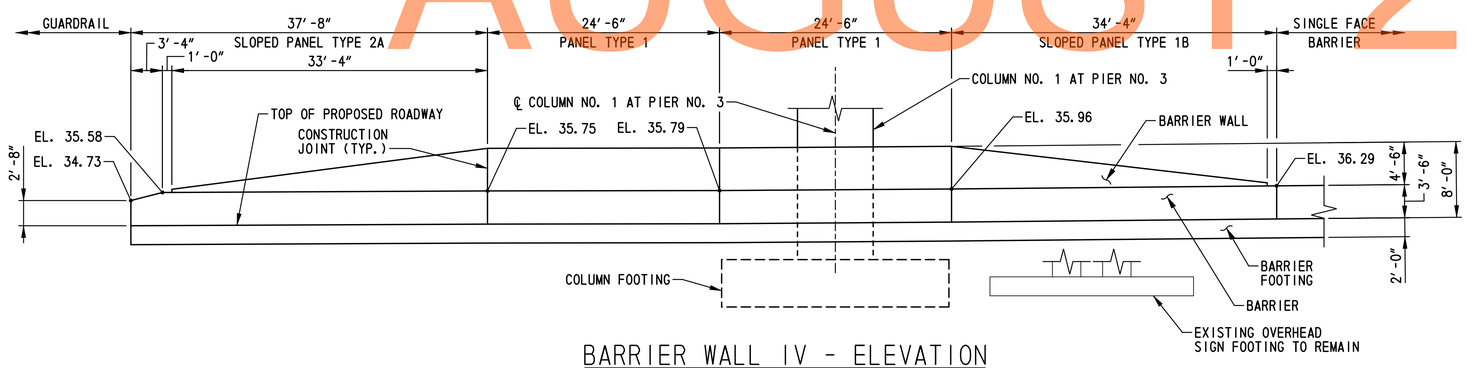

BARRIER WALL IV - ELEVATION

SCALE: ⅛"=1'-0"

NOTES:

1. FOR BARRIER WALL NOTES, SEE DWG. NO. DT-25.
2. DRAINAGE INLET LOCATION. DRAINAGE INLET NOT SHOWN FOR CLARITY. FOR DRAINAGE INLET ASSEMBLY DETAILS, SEE DWG. NOS. DT-09 THRU DT-12.

DRAFT
NOT FOR BIDDING
AUGUST 2015

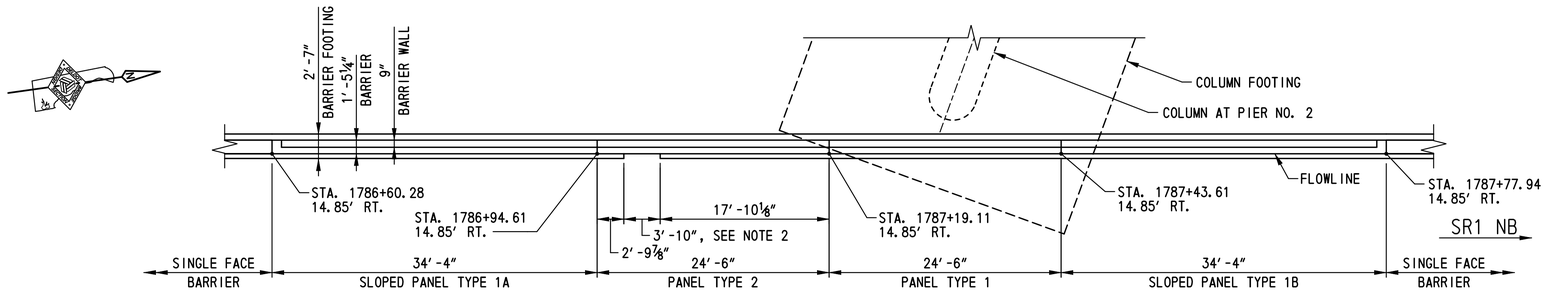

BARRIER WALL V - PLAN
SCALE: ⅛"=1'-0"

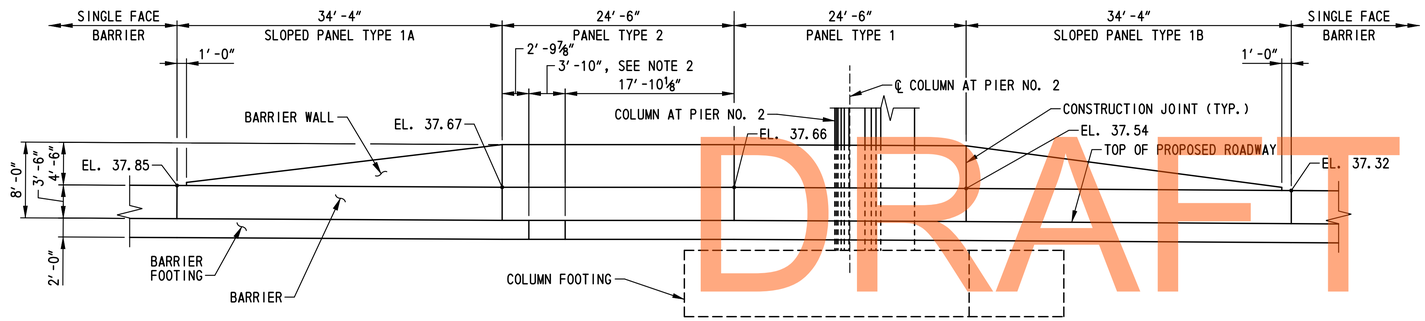

BARRIER WALL V - ELEVATION
SCALE: ⅛"=1'-0"

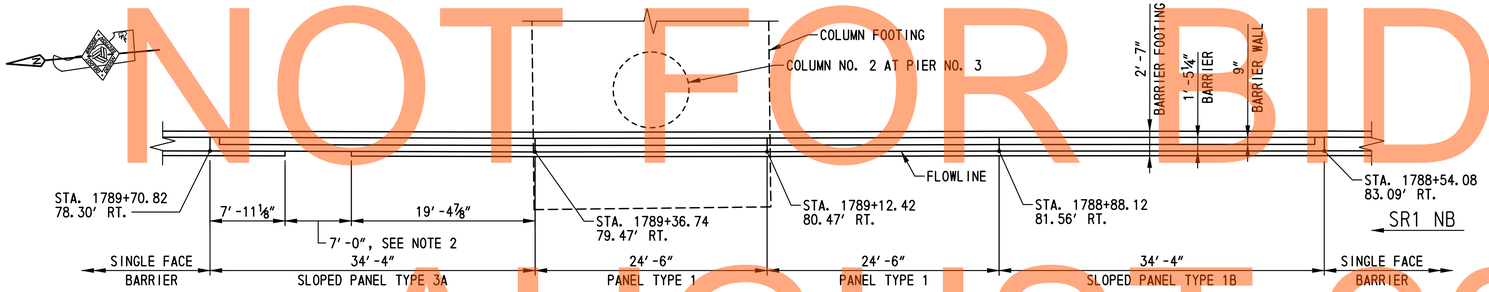

BARRIER WALL VI - PLAN
SCALE: ⅛"=1'-0"

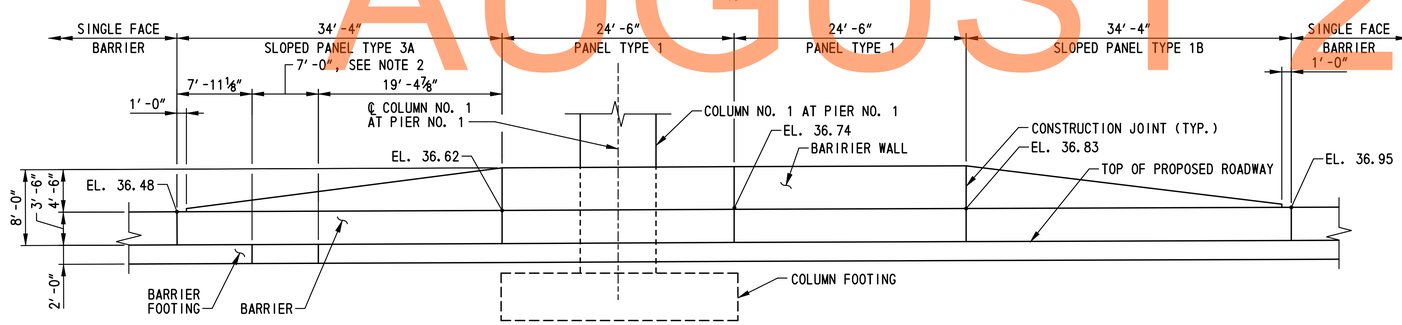

BARRIER WALL VI - ELEVATION
SCALE: ⅛"=1'-0"

NOTES:
1. FOR BARRIER WALL NOTES, SEE DWG. NO. DT-25.
2. DRAINAGE INLET LOCATION. DRAINAGE INLET NOT SHOWN FOR CLARITY. FOR DRAINAGE INLET ASSEMBLY DETAILS, SEE DWG. NOS. DT-09 THRU DT-12.

DRAFT
NOT FOR BIDDING
AUGUST 2015

N:\31653-000\Contract 1B\CADD\DT027U301_1B.dgn
2/5/2013 7:21:36 AM

DELAWARE DEPARTMENT OF TRANSPORTATION	ADDENDUMS / REVISIONS	SCALE: AS SHOWN	US 301 & SR 1 INTERCHANGE	CONTRACT T200911302	BRIDGE NO.	BARRIER WALLS V AND VI PLAN AND ELEVATION	DT-27
				COUNTY NEW CASTLE	DESIGNED BY: K.M.L.		SHEET NO. 110
					CHECKED BY: B.K.B.		TOTAL SHTS. 491

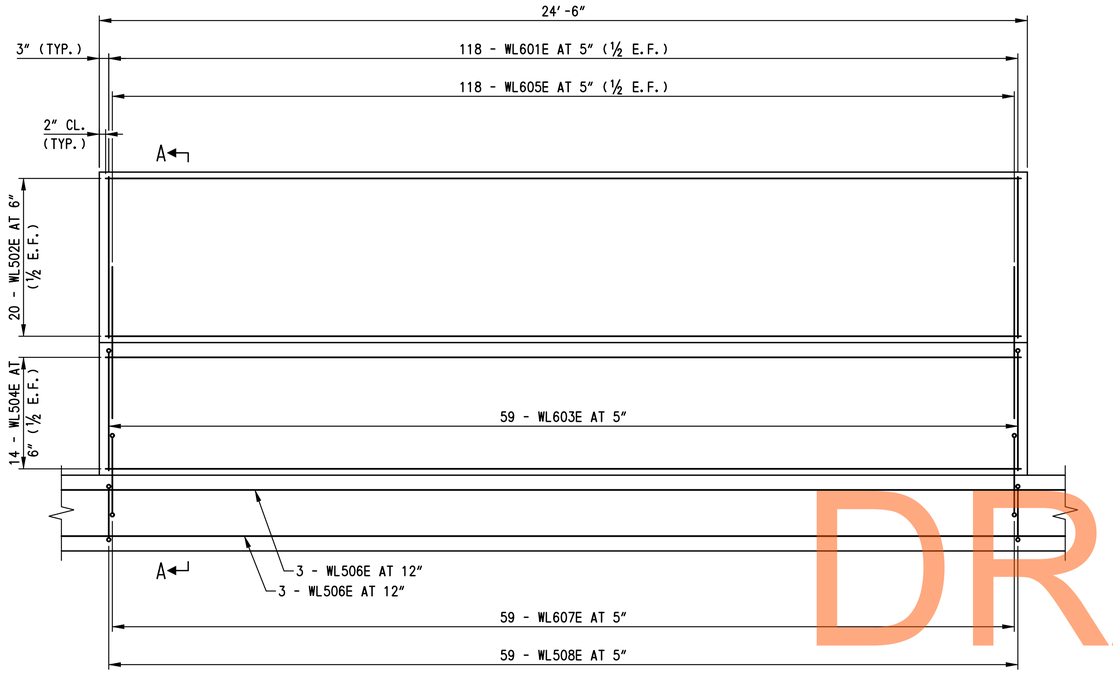

PANEL TYPE 1 ELEVATION
SCALE: ½"=1'-0"

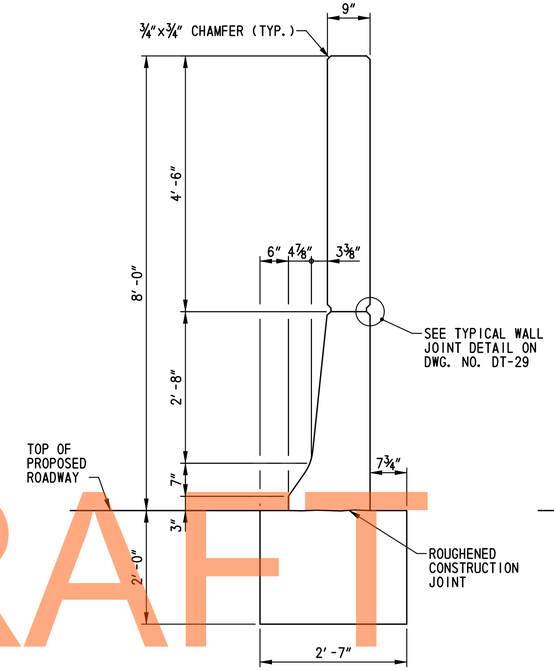

TYPICAL SECTION A-A
SCALE: ¾"=1'-0"

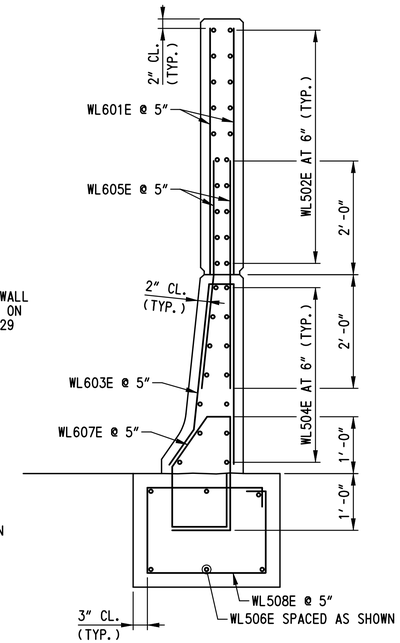

TYPICAL SECTION A-A - REINFORCEMENT
SCALE: ¾"=1'-0"

NOTES:

1. FOR BARRIER WALL NOTES, SE DWG. NO. DT-25.
2. FOR LOCATIONS OF PANEL TYPES 1 AND 2, SEE DWG. NOS. DT-25 THRU DT-27.
3. DRAINAGE INLET LOCATION. DRAINAGE INLET NOT SHOWN FOR CLARITY. FOR DRAINAGE INLET ASSEMBLY DETAILS, SEE DWG. NOS. DT-09 THRU DT-12.

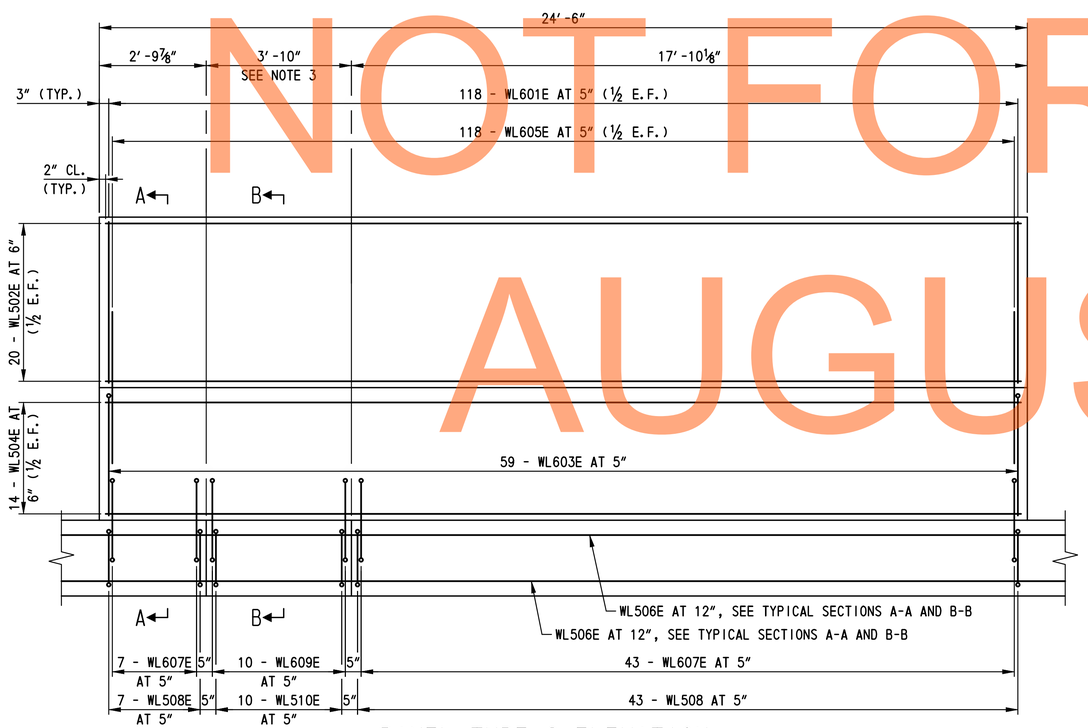

PANEL TYPE 2 ELEVATION
SCALE: ½"=1'-0"

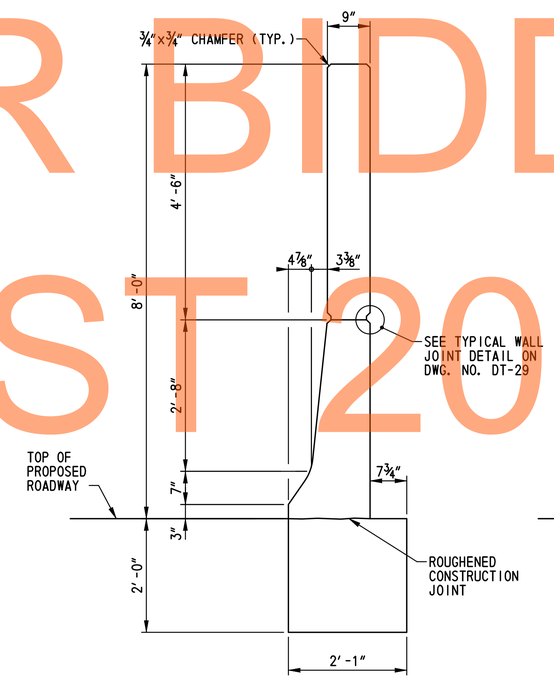

TYPICAL SECTION B-B
SCALE: ¾"=1'-0"

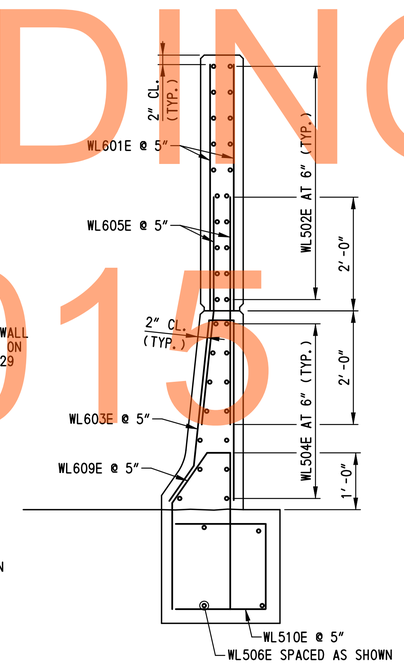

TYPICAL SECTION B-B - REINFORCEMENT
SCALE: ¾"=1'-0"

DRAFT
NOT FOR BIDDING
AUGUST 2015

N:\31653-000\Contract 1B\CADD\DT028U301_1B.dgn
2/5/2013 7:22:10 AM

DELAWARE DEPARTMENT OF TRANSPORTATION	ADDENDUMS / REVISIONS	SCALE: AS SHOWN	US 301 & SR 1 INTERCHANGE	CONTRACT T200911302 / COUNTY NEW CASTLE	BRIDGE NO. / DESIGNED BY: K.M.L. / CHECKED BY: B.K.B.	BARRIER WALL DETAILS – 1

DT-28
SHEET NO. 111
TOTAL SHTS. 491

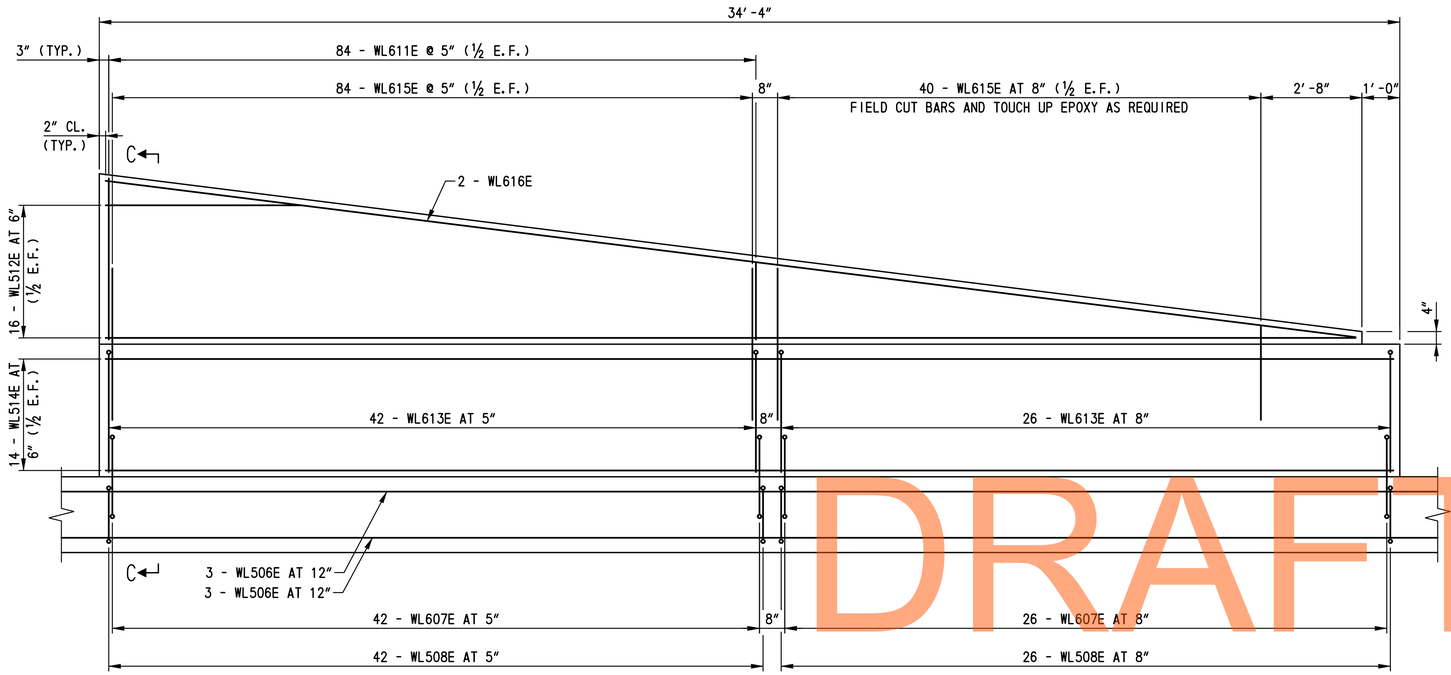

SLOPED PANEL TYPE 1A AND 1B ELEVATION

SCALE: ½"=1'-0"

NOTE:
SLOPED PANEL TYPE 1B SHOWN,
SLOPED PANEL TYPE 1A SIMILAR.

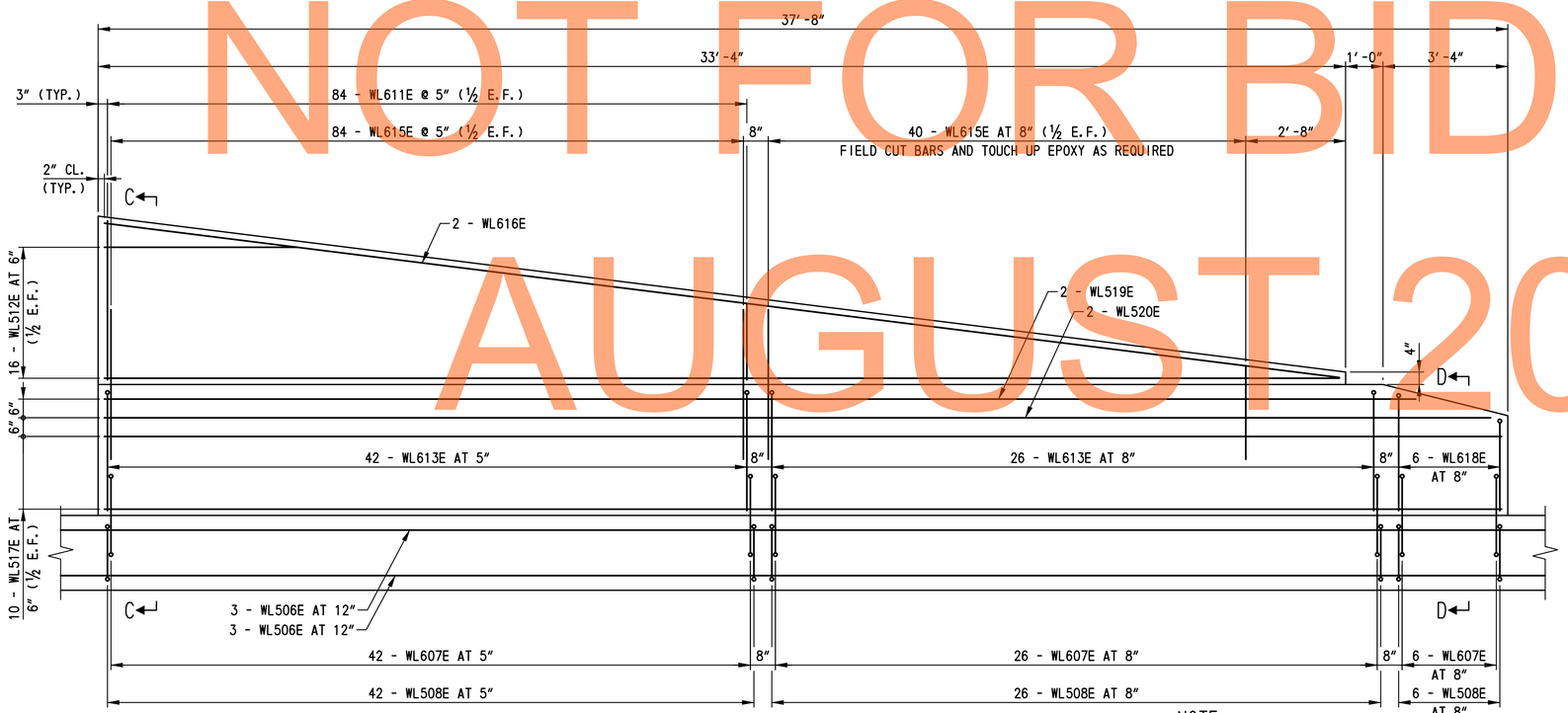

SLOPED PANEL TYPE 2A AND 2B ELEVATION

SCALE: ½"=1'-0"

NOTE:
SLOPED PANEL TYPE 2B SHOWN,
SLOPED PANEL TYPE 2A SIMILAR.

NOTES:

1. FOR BARRIER WALL NOTES, SE DWG. NO. DT-25.
2. FOR LOCATIONS OF SLOPED PANEL TYPES 1A, 1B, 2A AND 2B, SEE DWG. NOS. DT-25 THRU DT-27.
3. FOR TYPICAL SECTIONS C-C AND D-D, SEE DWG. NO. DT-31.

DRAFT
NOT FOR BIDDING
AUGUST 2015

N:\31653-000\Contract 1B\CADD\DT029U301_1B.dgn
2/5/2013 7:22:42 AM

DELAWARE DEPARTMENT OF TRANSPORTATION	ADDENDUMS / REVISIONS	SCALE: AS SHOWN	US 301 & SR 1 INTERCHANGE	CONTRACT T200911302	BRIDGE NO.	BARRIER WALL DETAILS – 2	DT-29
				COUNTY NEW CASTLE	DESIGNED BY: K.M.L.		SHEET NO. 112
					CHECKED BY: B.K.B.		TOTAL SHTS. 491

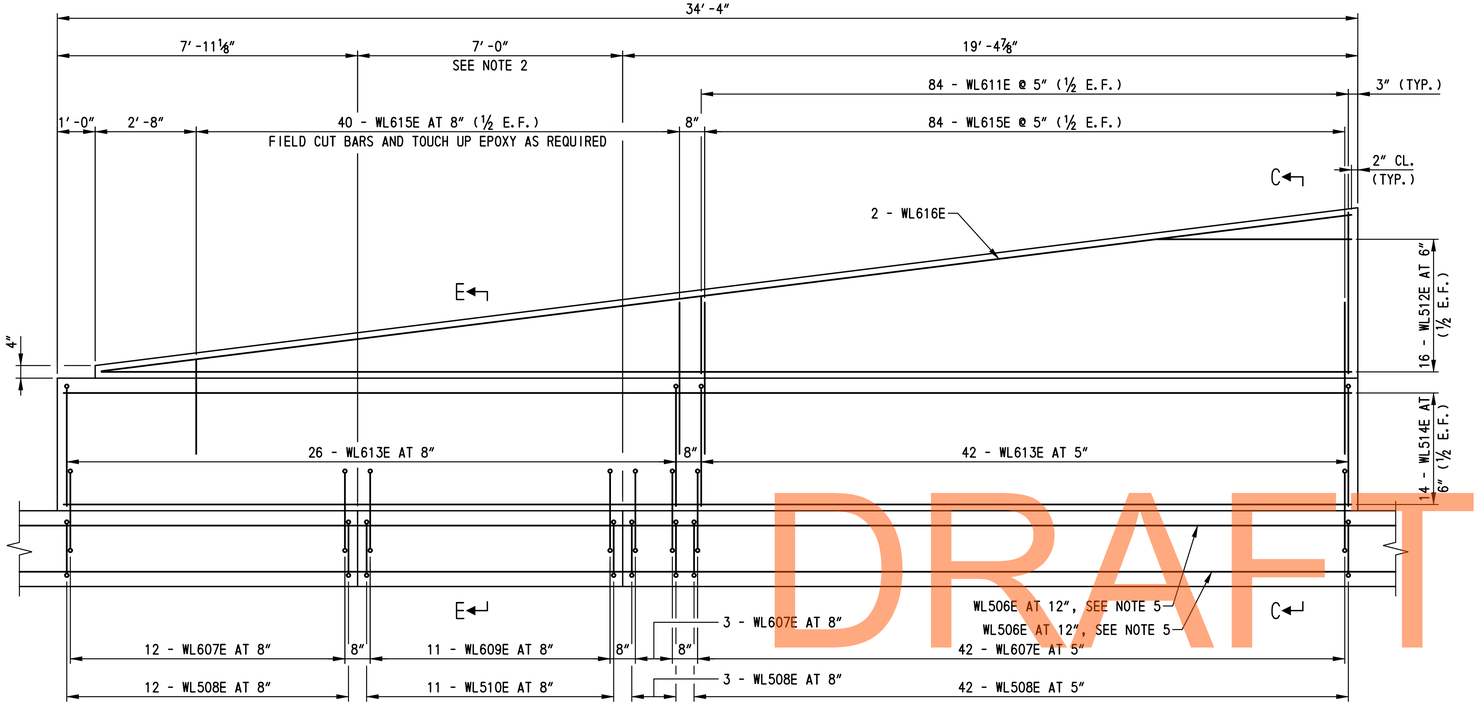

SLOPED PANEL TYPE 3A ELEVATION

SCALE: ½″=1′-0″

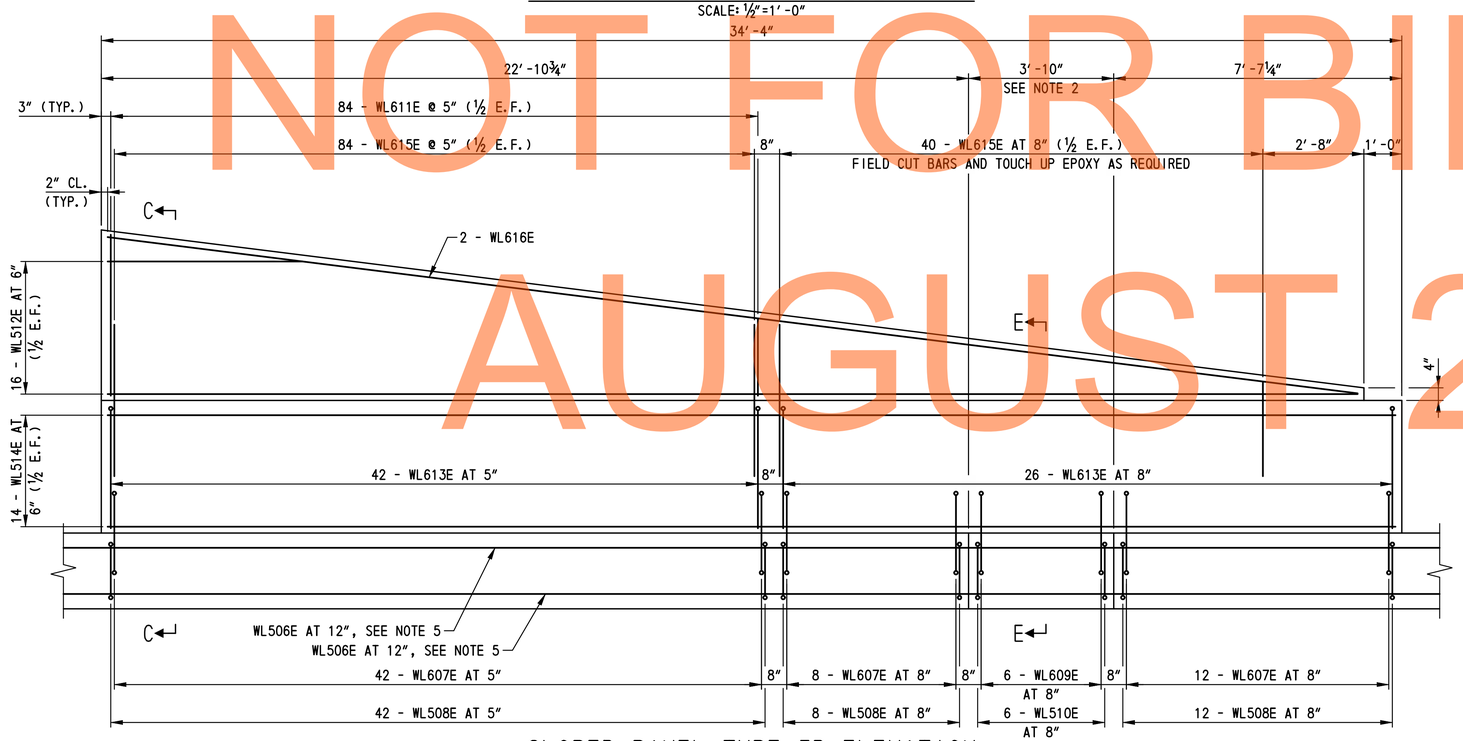

SLOPED PANEL TYPE 3B ELEVATION

SCALE: ½″=1′-0″

DRAFT
NOT FOR BIDDING
AUGUST 2015

NOTES:

1. FOR BARRIER WALL NOTES, SE DWG. NO. DT-25.
2. DRAINAGE INLET LOCATION. DRAINAGE INLET NOT SHOWN FOR CLARITY. FOR DRAINAGE INLET ASSEMBLY DETAILS, SEE DWG. NOS. DT-09 THRU DT-12.
3. FOR LOCATIONS OF SLOPED PANEL TYPES 3A AND 3B, SEE DWG. NOS. DT-25 THRU DT-27.
4. FOR TYPICAL SECTIONS C-C AND E-E, SEE DWG. NO. DT-31.
5. FOR ADDITIONAL INFORMATION ON FOOTING REINFORCEMENT, SEE TYPICAL SECTIONS C-C AND E-E ON DWG. NO. DT-31.

N:\31653-000\Contract 1B\CADD\DT030U301_1B.dgn
2/5/2015 7:23:16 AM

DELAWARE DEPARTMENT OF TRANSPORTATION	ADDENDUMS / REVISIONS	SCALE: AS SHOWN	US 301 & SR 1 INTERCHANGE	CONTRACT T200911302	BRIDGE NO.	BARRIER WALL DETAILS – 3
				COUNTY NEW CASTLE	DESIGNED BY: K.M.L.	
					CHECKED BY: B.K.B.	

DT-30

SHEET NO. 113

TOTAL SHTS. 491

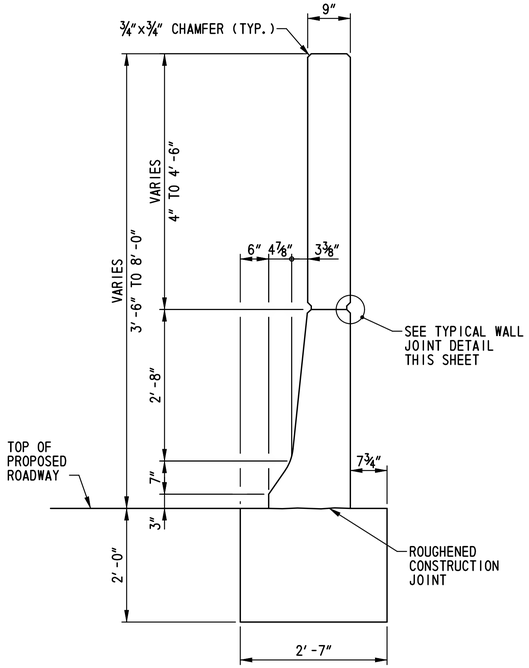

TYPICAL SECTION C-C

SCALE: ¾"=1'-0"

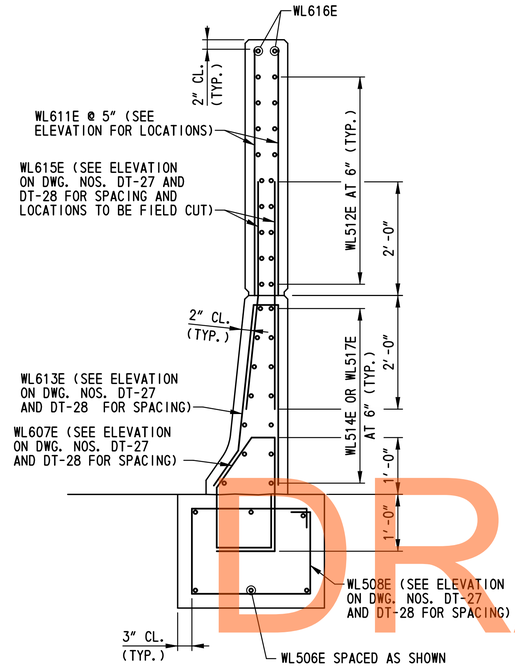

TYPICAL SECTION C-C - REINFORCEMENT

SCALE: ¾"=1'-0"

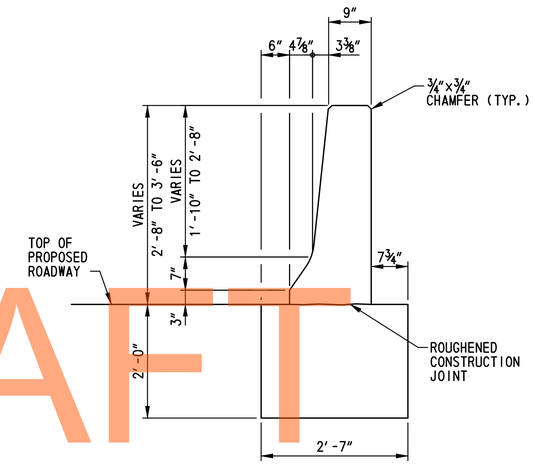

TYPICAL SECTION D-D

SCALE: ¾"=1'-0"

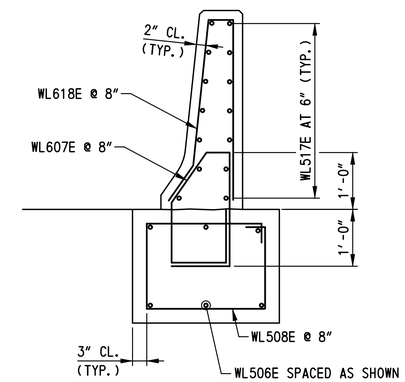

TYPICAL SECTION D-D - REINFORCEMENT

SCALE: ¾"=1'-0"

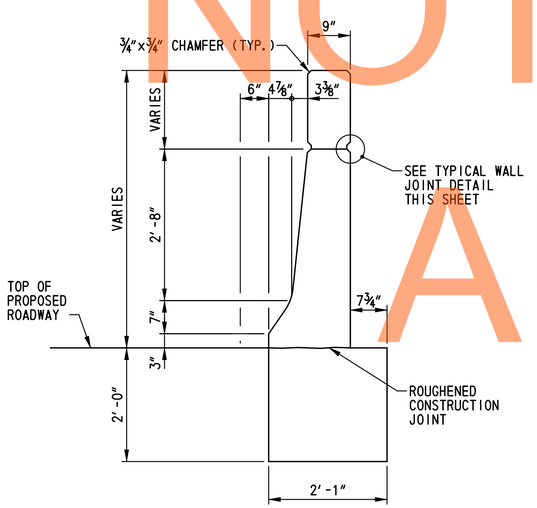

TYPICAL SECTION E-E

SCALE: ¾"=1'-0"

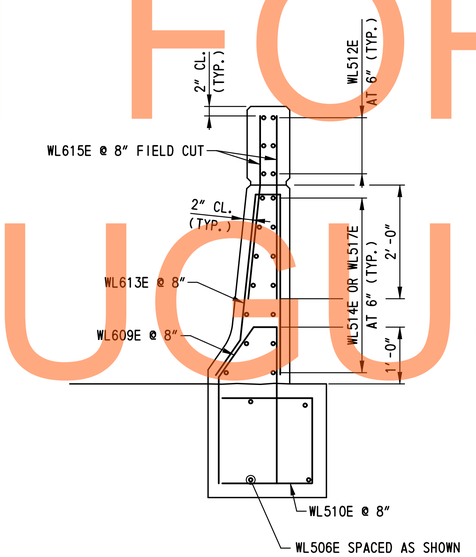

TYPICAL SECTION E-E - REINFORCEMENT

SCALE: ¾"=1'-0"

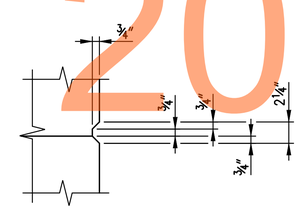

TYPICAL WALL JOINT DETAIL

SCALE: 1½"=1'-0"

NOTES:

1. FOR BARRIER WALL NOTES, SEE DWG. NO. DT-25.
2. FOR LOCATIONS OF TYPICAL SECTIONS C-C, D-D AND E-E, SEE DWG. NOS. DT-25 THRU DT-27.

DRAFT
NOT FOR BIDDING
AUGUST 2015

N:\31653-000\Contract 1B\CADD\DT031U301_1B.dgn
2/5/2013 7:24:43 AM

DELAWARE DEPARTMENT OF TRANSPORTATION	ADDENDUMS / REVISIONS	SCALE: AS SHOWN	US 301 & SR 1 INTERCHANGE	CONTRACT T200911302 / COUNTY NEW CASTLE	BRIDGE NO. / DESIGNED BY: K.M.L. / CHECKED BY: B.K.B.	BARRIER WALL DETAILS – 4

DT-31

SHEET NO. 114

TOTAL SHTS. 491

① ANY MARK NUMBER WITH SUFFIX 'E' DENOTES EPOXY COATED REINFORCING STEEL.

② ALL MARK 'LOCATION PREFIXES' SHALL CONSIST OF TWO LETTERS AND ARE AS FOLLOWS: AB = ABUTMENT, AS = APPROACH SLAB, BC = BOX CULVERT, BW = BACKWALL, CL = COLUMN, DK = DECK, DL = DOWEL, FT = FOOTING, HW = HEADWALL, MS = MISC. BARS, PA = PARAPET, PR = PIER, SC = SHEETPILE CAP, SL = SLAB, TW = TOEWALL, WL = WALL (UNIQUE LOCATION), WW = WINGWALL

SPECIFICATIONS					BENDING DIMENSIONS (FEET-INCHES /QUARTER INCH)											
QTY.	SIZE	LENGTH	MARK	TYPE	A	B	C	D	E	F/R	G	H	J	K	O
BARRIER WALL I															
236	6	4-04 0	WL601E	STR		4-04 0									
40	5	24-02 0	WL502E	STR		24-02 0									
118	6	6-10 3	WL603E	T15		3-02 0	0-05 1	2-07 0	0-08 2			0-07 0	0-03 1	2-06 3	1-01 1
28	5	24-02 0	WL504E	STR		24-02 0									
236	6	4-00 0	WL605E	STR		4-00 0									
18	5	60-00 0	WL506E	STR		60-00 0									
260	6	7-09 3	WL607E	F	1-00 0	0-06 2	0-11 3	1-02 1	1-01 1	2-00 0	1-00 0	0-09 3		0-06 3	
260	5	8-02 0	WL508E	T2	0-06 0	2-01 0	1-06 0	2-01 0	1-06 0		0-06 0				
168*	6	2-00 0	WL611E	STR		2-00 0									
		T0				T0									
		4-01 2				4-01 2									
			*2 SETS OF	84											
32*	5	5-01 3	WL512E	STR		5-01 3									
		T0				T0									
		33-00 0				33-00 0									
			*2 SETS OF	16											
136	6	6-10 3	WL613E	T15		3-02 0	0-05 1	2-07 0	0-08 2			0-07 0	0-03 1	2-06 3	1-01 1
14	5	34-00 0	WL514E	STR		34-00 0									
248	6	4-00 0	WL615E	STR		4-00 0									
4	6	33-03 0	WL616E	STR		33-03 0									
10	5	37-04 0	WL517E	STR		37-04 0									
6*	6	5-03 2	WL618E	T15		2-04 0	0-06 1	1-08 3	0-08 2			0-07 0	0-02 1	1-08 3	1-01 1
		T0				T0	T0	T0					T0	T0	
		6-10 3				3-02 0	0-05 1	2-07 0					0-03 1	2-06 3	
2	5	34-08 2	WL519E	STR		34-08 2									
2	5	36-08 2	WL520E	STR		36-08 2									

SPECIFICATIONS					BENDING DIMENSIONS (FEET-INCHES /QUARTER INCH)											
QTY.	SIZE	LENGTH	MARK	TYPE	A	B	C	D	E	F/R	G	H	J	K	O
BARRIER WALL II															
236	6	4-04 0	WL601E	STR		4-04 0									
40	5	24-02 0	WL502E	STR		24-02 0									
118	6	6-10 3	WL603E	T15		3-02 0	0-05 1	2-07 0	0-08 2			0-07 0	0-03 1	2-06 3	1-01 1
28	5	24-02 0	WL504E	STR		24-02 0									
236	6	4-00 0	WL605E	STR		4-00 0									
18	5	60-00 0	WL506E	STR		60-00 0									
260	6	7-09 3	WL607E	F	1-00 0	0-06 2	0-11 3	1-02 1	1-01 1	2-00 0	1-00 0	0-09 3		0-06 3	
260	5	8-02 0	WL508E	T2	0-06 0	2-01 0	1-06 0	2-01 0	1-06 0		0-06 0				
168*	6	2-00 0	WL611E	STR		2-00 0									
		T0				T0									
		4-01 2				4-01 2									
			*2 SETS OF	84											
32*	5	5-01 3	WL512E	STR		5-01 3									
		T0				T0									
		33-00 0				33-00 0									
			*2 SETS OF	16											
136	6	6-10 3	WL613E	T15		3-02 0	0-05 1	2-07 0	0-08 2			0-07 0	0-03 1	2-06 3	1-01 1
14	5	34-00 0	WL514E	STR		34-00 0									
248	6	4-00 0	WL615E	STR		4-00 0									
4	6	33-03 0	WL616E	STR		33-03 0									
10	5	37-04 0	WL517E	STR		37-04 0									
6*	6	5-03 2	WL618E	T15		2-04 0	0-06 1	1-08 3	0-08 2			0-07 0	0-02 1	1-08 3	1-01 1
		T0				T0	T0	T0					T0	T0	
		6-10 3				3-02 0	0-05 1	2-07 0					0-03 1	2-06 3	
2	5	34-08 2	WL519E	STR		34-08 2									
2	5	36-08 2	WL520E	STR		36-08 2									

SPECIFICATIONS					BENDING DIMENSIONS (FEET-INCHES /QUARTER INCH)											
QTY.	SIZE	LENGTH	MARK	TYPE	A	B	C	D	E	F/R	G	H	J	K	O
BARRIER WALL III															
236	6	4-04 0	WL601E	STR		4-04 0									
40	5	24-02 0	WL502E	STR		24-02 0									
118	6	6-10 3	WL603E	T15		3-02 0	0-05 1	2-07 0	0-08 2			0-07 0	0-03 1	2-06 3	1-01 1
28	5	24-02 0	WL504E	STR		24-02 0									
236	6	4-00 0	WL605E	STR		4-00 0									
18	5	60-00 0	WL506E	STR		60-00 0									
248	6	7-09 3	WL607E	F	1-00 0	0-06 2	0-11 3	1-02 1	1-01 1	2-00 0	1-00 0	0-09 3		0-06 3	
248	5	8-02 0	WL508E	T2	0-06 0	2-01 0	1-06 0	2-01 0	1-06 0		0-06 0				
6	6	6-02 2	WL609E	F		0-06 2	0-11 3	1-11 1		2-09 0		0-09 3		0-06 3	
6	5	4-08 0	WL510E	17		1-07 0	1-06 0	1-07 0							
168*	6	2-00 0	WL611E	STR		2-00 0									
		T0				T0									
		4-01 2				4-01 2									
			*2 SETS OF	84											
32*	5	5-01 3	WL512E	STR		5-01 3									
		T0				T0									
		33-00 0				33-00 0									
			*2 SETS OF	16											
136	6	6-10 3	WL613E	T15		3-02 0	0-05 1	2-07 0	0-08 2			0-07 0	0-03 1	2-06 3	1-01 1
28	5	34-00 0	WL514E	STR		34-00 0									
248	6	4-00 0	WL615E	STR		4-00 0									
4	6	33-03 0	WL616E	STR		33-03 0									

ASTM STANDARD ENGLISH REINFORCING BARS				RECOMMENDED END HOOKS, APPLICABLE TO ALL GRADES				STIRRUP AND TIE HOOKS, APPLICABLE TO ALL GRADES			
	NOMINAL DIMENSIONS				180° HOOKS		90° HOOKS		90° HOOK	135° HOOK	
BAR SIZE	DIAMETER (INCHES)	AREA (INCHES²)	WEIGHT (LBS./FT.)	D	A OR G	J	A OR G	D	A OR G	A OR G	H
3	0.375	0.110	0.376	2¼″	5″	3″	6″	1½″	4″	4″	2½″
4	0.500	0.200	0.668	3″	6″	4″	8″	2″	4½″	4½″	3″
5	0.625	0.310	1.043	3¾″	7″	5″	10″	2½″	6″	5½″	3¾″
6	0.750	0.440	1.502	4½″	8″	6″	1-0″	4½″	1-0″	8″	4½″
7	0.875	0.600	2.044	5¼″	10″	7″	1-2″	5¼″	1-2″	9″	5¼″
8	1.000	0.790	2.670	6″	11″	8″	1-4″	6″	1-4″	10½″	6″
9	1.128	1.000	3.400	9½″	1-3″	11¾″	1-7″				
10	1.270	1.270	4.303	10¾″	1-5″	1-1¼″	1-10″				
11	1.410	1.560	5.313	1-0″	1-7″	1-2¾″	2-0″				
14	1.693	2.250	7.650	1-6¼″	2-3″	1-9¾″	2-7″				
18	2.257	4.000	13.600	2-0″	3-0″	2-4½″	3-5″				

NOTES:

1. FIGURES SHOWN IN CIRCLES REPRESENT BAR BEND TYPES.
2. STANDARD BAR BENDS INCLUDE ONLY THOSE TYPES BELOW, INDICATED AS SUCH.
3. ALL DIMENSIONS OUT-TO-OUT, EXCEPT "A" AND "G" ON STD. 180° AND 135° HOOKS.
4. "J" DIMENSIONS ON 180° HOOKS TO BE SHOWN ONLY WHERE NECESSARY TO RESTRICT HOOK SIZE, OTHERWISE STANDARD 'ACI' HOOKS ARE TO BE USED.
5. WHERE "J" IS NOT SHOWN, "J" WILL BE KEPT EQUAL TO OR LESS THAN "H" ON TYPES 3, 5 AND 22. WHERE "J" CAN EXCEED "H", IT SHALL BE SHOWN.
6. "H" DIMENSIONS OF STIRRUPS TO BE SHOWN AS NEEDED TO FIT WITHIN THE CONCRETE.
7. UNLESS OTHERWISE NOTED, DIAMETER "D" IS THE SAME FOR ALL BENDS AND HOOKS ON A BAR (EXCEPT FOR BEND TYPES 11 AND 13).
8. WHERE SLOPE DIFFERS FROM 45° OFFSET, "H" AND "K" MUST BE SHOWN.
9. WHERE BARS ARE TO BE BENT MORE ACCURATELY THAN STANDARD BENDING TOLERANCES, BENDING DIMENSIONS REQUIRING CLOSER FABRICATION SHOULD HAVE LIMITS INDICATED.
10. FOR RECOMMENDED DIAMETER "D", OF BENDS, HOOKS, ETC., REFER TO TABLE ABOVE, 'CRSI' OR 'ACI' TABLES WHERE APPLICABLE AND REQUIRED.
11. TYPE S1-S6, S11, T1-T3 AND T6-T9 APPLICABLE TO BAR SIZES #3 THROUGH #8.

STANDARD BAR BENDS

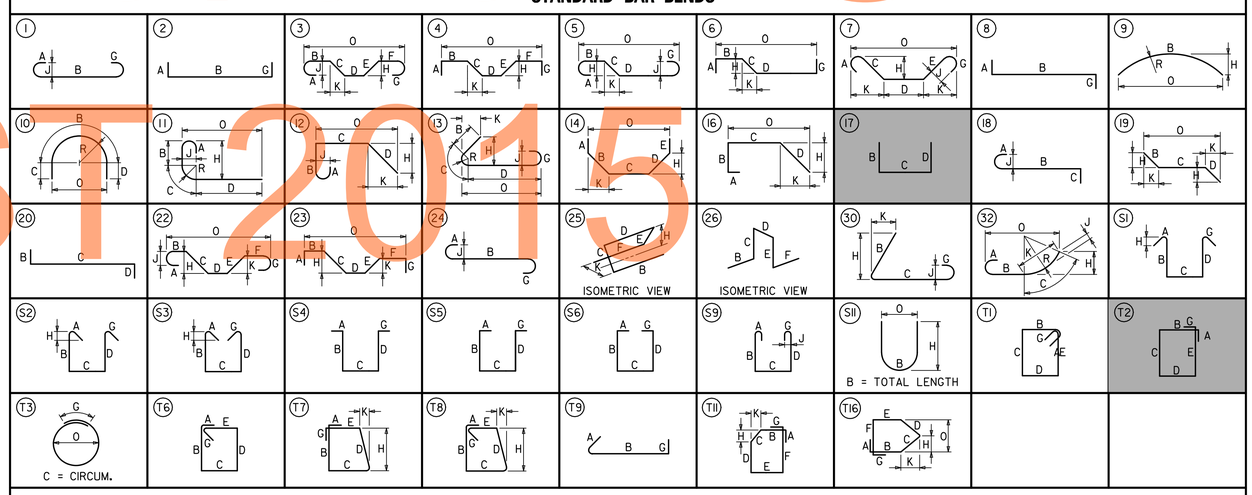

SPECIAL BAR BENDS

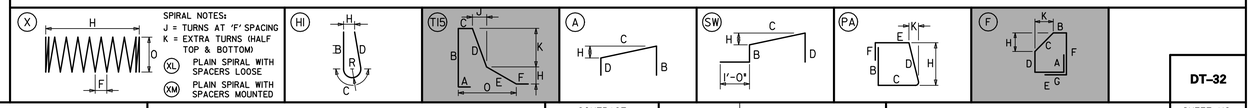

STIRRUP AND TIE HOOKS

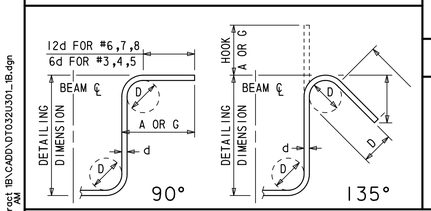

180° AND 90° END HOOKS

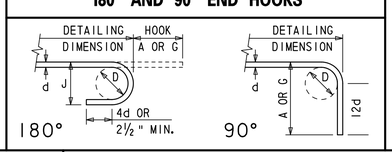

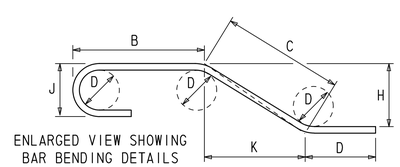

ENLARGED VIEW SHOWING BAR BENDING DETAILS

DRAFT
NOT FOR BIDDING
AUGUST 2015

N:\31653-000\Contract T8\CADD\DT032U301_T8.dgn
2/5/2015 7:25:18 AM

DELAWARE DEPARTMENT OF TRANSPORTATION

ADDENDUMS / REVISIONS

NOT TO SCALE

US 301 & SR 1 INTERCHANGE

CONTRACT: T200911302
COUNTY: NEW CASTLE
BRIDGE NO.:
DESIGNED BY: W.T.R.
CHECKED BY: B.K.B.

BARRIER WALL I, II, AND III REINFORCEMENT LIST

DT-32

SHEET NO. 115
TOTAL SHTS. 491

① ANY MARK NUMBER WITH SUFFIX 'E' DENOTES EPOXY COATED REINFORCING STEEL.

② ALL MARK 'LOCATION PREFIXES' SHALL CONSIST OF TWO LETTERS AND ARE AS FOLLOWS: AB = ABUTMENT, AS = APPROACH SLAB, BC = BOX CULVERT, BW = BACKWALL, CL = COLUMN, DK = DECK, DL = DOWEL, FT = FOOTING, HW = HEADWALL, MS = MISC. BARS, PA = PARAPET, PR = PIER, SC = SHEETPILE CAP, SL = SLAB, TW = TOEWALL, WL = WALL (UNIQUE LOCATION), WW = WINGWALL

SPECIFICATIONS					BENDING DIMENSIONS (FEET-INCHES /QUARTER INCH)										
QTY.	SIZE	LENGTH	MARK	TYPE	A	B	C	D	E	F/R	G	H	J	K	O
BARRIER WALL IV															
236	6	4-04 0	WL601E	STR		4-04 0									
40	5	24-02 0	WL502E	STR		24-02 0									
118	6	6-10 3	WL603E	T15		3-02 0	0-05 1	2-07 0	0-08 2			0-07 0	0-03 1	2-06 3	1-01 1
28	5	24-02 0	WL504E	STR		24-02 0									
236	6	4-00 0	WL605E	STR		4-00 0									
18	5	60-00 0	WL506E	STR		60-00 0									
260	6	7-09 3	WL607E	F	1-00 0	0-06 2	0-11 3	1-02 1	1-01 1	2-00 0	1-00 0	0-09 3		0-06 3	
260	5	8-02 0	WL508E	T2	0-06 0	2-01 0	1-06 0	2-01 0	1-06 0		0-06 0				
168*	6	2-00 0	WL611E	STR		2-00 0									
		T0				T0									
		4-01 2				4-01 2									
			*2 SETS OF	84											
32*	5	5-01 3	WL512E	STR		5-01 3									
		T0				T0									
		33-00 0				33-00 0									
			*2 SETS OF	16											
136	6	6-10 3	WL613E	T15		3-02 0	0-05 1	2-07 0	0-08 2			0-07 0	0-03 1	2-06 3	1-01 1
14	5	34-00 0	WL514E	STR		34-00 0									
248	6	4-00 0	WL615E	STR		4-00 0									
4	6	33-03 0	WL616E	STR		33-03 0									
10	5	37-04 0	WL517E	STR		37-04 0									
6*	6	5-03 2	WL618E	T15		2-04 0	0-06 1	1-08 3	0-08 2			0-07 0	0-02 1	1-08 3	1-01 1
		T0				T0	T0	T0					T0	T0	
		6-10 3				3-02 0	0-05 1	2-07 0					0-03 1	2-06 3	
2	5	34-08 2	WL519E	STR		34-08 2									
2	5	36-08 2	WL520E	STR		36-08 2									

SPECIFICATIONS					BENDING DIMENSIONS (FEET-INCHES /QUARTER INCH)										
QTY.	SIZE	LENGTH	MARK	TYPE	A	B	C	D	E	F/R	G	H	J	K	O
BARRIER WALL V															
236	6	4-04 0	WL601E	STR		4-04 0									
40	5	24-02 0	WL502E	STR		24-02 0									
118	6	6-10 3	WL603E	T15		3-02 0	0-05 1	2-07 0	0-08 2			0-07 0	0-03 1	2-06 3	1-01 1
28	5	24-02 0	WL504E	STR		24-02 0									
236	6	4-00 0	WL605E	STR		4-00 0									
18	5	60-00 0	WL506E	STR		60-00 0									
245	6	7-09 3	WL607E	F	1-00 0	0-06 2	0-11 3	1-02 1	1-01 1	2-00 0	1-00 0	0-09 3		0-06 3	
245	5	8-02 0	WL508E	T2	0-06 0	2-01 0	1-06 0	2-01 0	1-06 0		0-06 0				
10	6	6-02 2	WL609E	F		0-06 2	0-11 3	1-11 1		2-09 0		0-09 3		0-06 3	
10	5	4-08 0	WL510E	17		1-07 0	1-06 0	1-07 0							
168*	6	2-00 0	WL611E	STR		2-00 0									
		T0				T0									
		4-01 2				4-01 2									
			*2 SETS OF	84											
32*	5	5-01 3	WL512E	STR		5-01 3									
		T0				T0									
		33-00 0				33-00 0									
			*2 SETS OF	16											
136	6	6-10 3	WL613E	T15		3-02 0	0-05 1	2-07 0	0-08 2			0-07 0	0-03 1	2-06 3	1-01 1
28	5	34-00 0	WL514E	STR		34-00 0									
248	6	4-00 0	WL615E	STR		4-00 0									
4	6	33-03 0	WL616E	STR		33-03 0									

SPECIFICATIONS					BENDING DIMENSIONS (FEET-INCHES /QUARTER INCH)										
QTY.	SIZE	LENGTH	MARK	TYPE	A	B	C	D	E	F/R	G	H	J	K	O
BARRIER WALL VI															
236	6	4-04 0	WL601E	STR		4-04 0									
40	5	24-02 0	WL502E	STR		24-02 0									
118	6	6-10 3	WL603E	T15		3-02 0	0-05 1	2-07 0	0-08 2			0-07 0	0-03 1	2-06 3	1-01 1
28	5	24-02 0	WL504E	STR		24-02 0									
236	6	4-00 0	WL605E	STR		4-00 0									
18	5	60-00 0	WL506E	STR		60-00 0									
243	6	7-09 3	WL607E	F	1-00 0	0-06 2	0-11 3	1-02 1	1-01 1	2-00 0	1-00 0	0-09 3		0-06 3	
243	5	8-02 0	WL508E	T2	0-06 0	2-01 0	1-06 0	2-01 0	1-06 0		0-06 0				
11	6	6-02 2	WL609E	F		0-06 2	0-11 3	1-11 1		2-09 0		0-09 3		0-06 3	
11	5	4-08 0	WL510E	17		1-07 0	1-06 0	1-07 0							
168*	6	2-00 0	WL611E	STR		2-00 0									
		T0				T0									
		4-01 2				4-01 2									
			*2 SETS OF	84											
32*	5	5-01 3	WL512E	STR		5-01 3									
		T0				T0									
		33-00 0				33-00 0									
			*2 SETS OF	16											
136	6	6-10 3	WL613E	T15		3-02 0	0-05 1	2-07 0	0-08 2			0-07 0	0-03 1	2-06 3	1-01 1
28	5	34-00 0	WL514E	STR		34-00 0									
248	6	4-00 0	WL615E	STR		4-00 0									
4	6	33-03 0	WL616E	STR		33-03 0									

ASTM STANDARD ENGLISH REINFORCING BARS				RECOMMENDED END HOOKS, APPLICABLE TO ALL GRADES				STIRRUP AND TIE HOOKS, APPLICABLE TO ALL GRADES			
	NOMINAL DIMENSIONS				180° HOOKS		90° HOOKS		90° HOOK	135° HOOK	
BAR SIZE	DIAMETER (INCHES)	AREA (INCHES²)	WEIGHT (LBS./FT.)	D	A OR G	J	A OR G	D	A OR G	A OR G	H
3	0.375	0.110	0.376	2¼″	5″	3″	6″	1½″	4″	4″	2½″
4	0.500	0.200	0.668	3″	6″	4″	8″	2″	4½″	4½″	3″
5	0.625	0.310	1.043	3¾″	7″	5″	10″	2½″	6″	5½″	3¾″
6	0.750	0.440	1.502	4½″	8″	6″	1-0″	4½″	1-0″	8″	4½″
7	0.875	0.600	2.044	5¼″	10″	7″	1-2″	5¼″	1-2″	9″	5¼″
8	1.000	0.790	2.670	6″	11″	8″	1-4″	6″	1-4″	10½″	6″
9	1.128	1.000	3.400	9½″	1-3″	11¾″	1-7″				
10	1.270	1.270	4.303	10¾″	1-5″	1-1¼″	1-10″				
11	1.410	1.560	5.313	1-0″	1-7″	1-2¾″	2-0″				
14	1.693	2.250	7.650	1-6¼″	2-3″	1-9¾″	2-7″				
18	2.257	4.000	13.600	2-0″	3-0″	2-4½″	3-5″				

NOTES:

1. FIGURES SHOWN IN CIRCLES REPRESENT BAR BEND TYPES.
2. STANDARD BAR BENDS INCLUDE ONLY THOSE TYPES BELOW, INDICATED AS SUCH.
3. ALL DIMENSIONS OUT-TO-OUT, EXCEPT "A" AND "G" ON STD. 180° AND 135° HOOKS.
4. "J" DIMENSIONS ON 180° HOOKS TO BE SHOWN ONLY WHERE NECESSARY TO RESTRICT HOOK SIZE, OTHERWISE STANDARD 'ACI' HOOKS ARE TO BE USED.
5. WHERE "J" IS NOT SHOWN, "J" WILL BE KEPT EQUAL TO OR LESS THAN "H" ON TYPES 3, 5 AND 22. WHERE "J" CAN EXCEED "H", IT SHALL BE SHOWN.
6. "H" DIMENSIONS OF STIRRUPS TO BE SHOWN AS NEEDED TO FIT WITHIN THE CONCRETE.
7. UNLESS OTHERWISE NOTED, DIAMETER "D" IS THE SAME FOR ALL BENDS AND HOOKS ON A BAR (EXCEPT FOR BEND TYPES 11 AND 13).
8. WHERE SLOPE DIFFERS FROM 45° OFFSET, "H" AND "K" MUST BE SHOWN.
9. WHERE BARS ARE TO BE BENT MORE ACCURATELY THAN STANDARD BENDING TOLERANCES, BENDING DIMENSIONS REQUIRING CLOSER FABRICATION SHOULD HAVE LIMITS INDICATED.
10. FOR RECOMMENDED DIAMETER "D", OF BENDS, HOOKS, ETC., REFER TO TABLE ABOVE, 'CRSI' OR 'ACI' TABLES WHERE APPLICABLE AND REQUIRED.
11. TYPE S1-S6, S11, T1-T3 AND T6-T9 APPLICABLE TO BAR SIZES #3 THROUGH #8.

STANDARD BAR BENDS

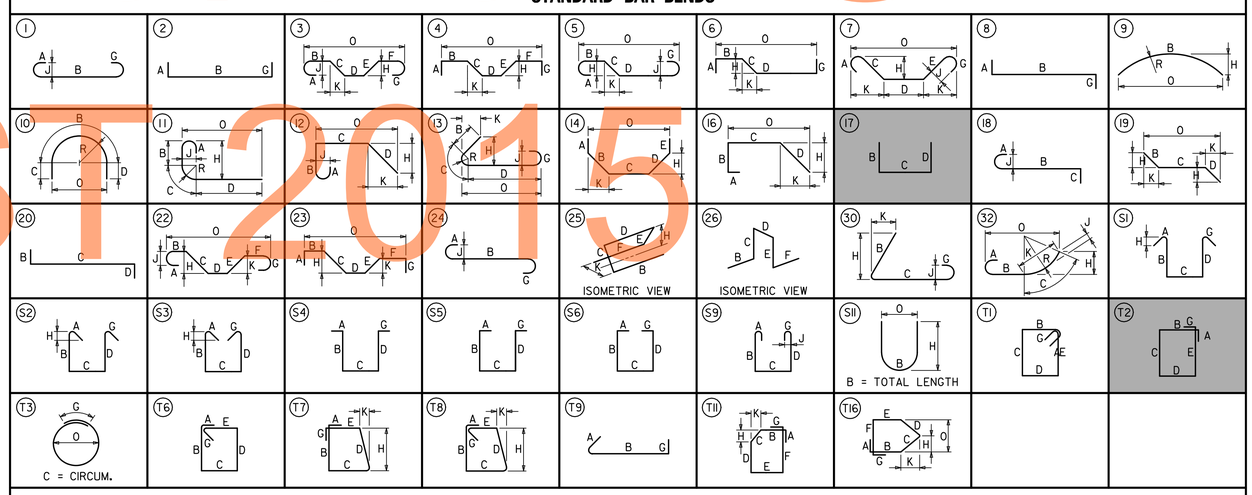

SPECIAL BAR BENDS

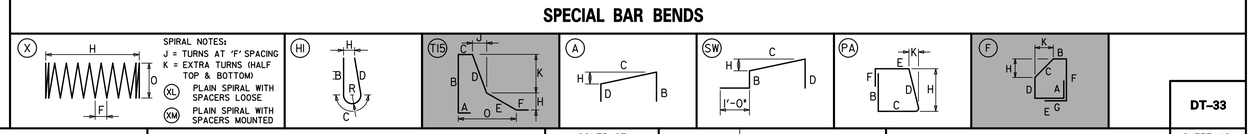

STIRRUP AND TIE HOOKS

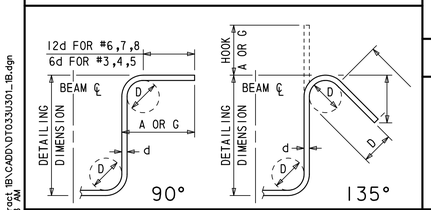

180° AND 90° END HOOKS

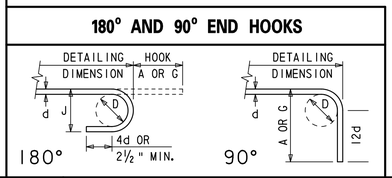

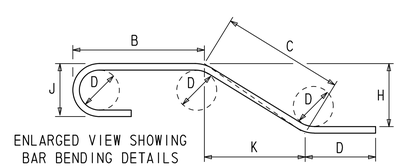

DRAFT
NOT FOR BIDDING
AUGUST 2015

N:\31653-000\Contract 1B\CADD\DT033U301_1B.dgn
2/5/2013 7:25:48 AM

DELAWARE DEPARTMENT OF TRANSPORTATION

ADDENDUMS / REVISIONS

NOT TO SCALE

US 301 & SR 1 INTERCHANGE

CONTRACT: T200911302
COUNTY: NEW CASTLE
BRIDGE NO.
DESIGNED BY: W.T.R.
CHECKED BY: B.K.B.

BARRIER WALL IV, V, AND VI REINFORCEMENT LIST

DT-33
SHEET NO. 116
TOTAL SHTS. 491