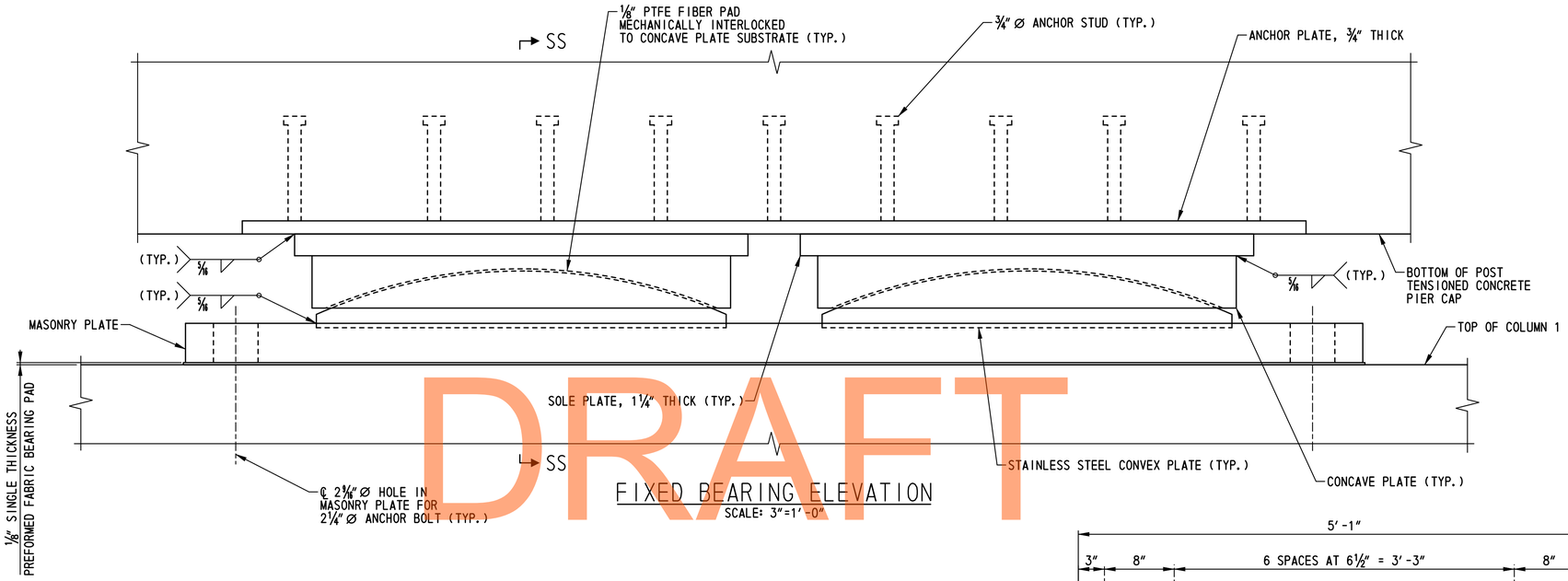

FIXED BEARING ELEVATION

SCALE: 3"=1'-0"

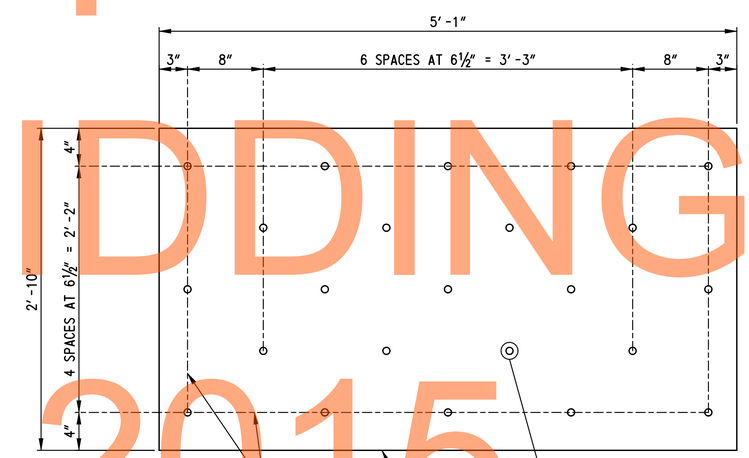

ANCHOR PLATE PLAN

SCALE: 1/4"=1'-0"

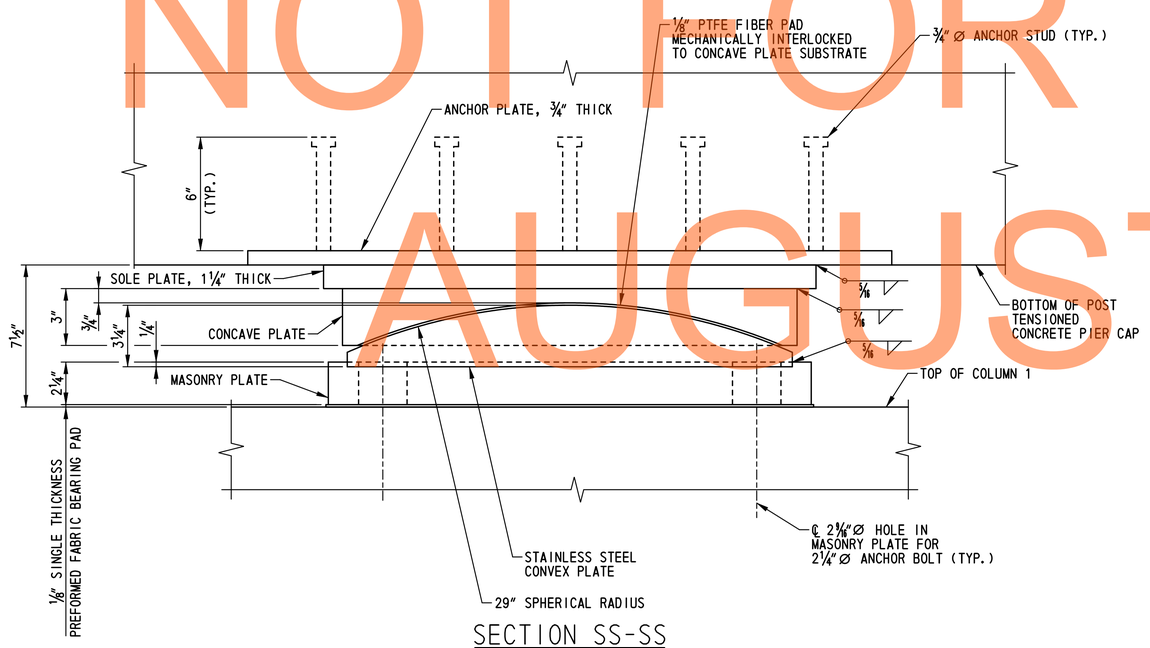

SECTION SS-SS

SCALE: 3"=1'-0"

NOTES:

1. FOR ADDITIONAL INFORMATION AND MATERIAL SPECIFICATIONS, SEE DWG. NO. BB-01.
2. ANCHOR BOLTS, NUTS AND PLATE WASHERS NOT SHOWN FOR CLARITY. FOR ANCHOR BOLT DETAIL, SEE DWG. NO. BB-01.

DRAFT
NOT FOR BIDDING
AUGUST 2015

DELAWARE DEPARTMENT OF TRANSPORTATION	ADDENDUMS / REVISIONS	SCALE: AS SHOWN	US 301 & SR 1 INTERCHANGE	CONTRACT T200911302 / COUNTY NEW CASTLE	BRIDGE NO. 1-433 / DESIGNED BY: W.T.R. / CHECKED BY: B.K.B.	PIER 1 FIXED BEARING DETAILS – 2

BR1-3 BB-04

SHEET NO. 249

TOTAL SHTS. 491

N:\31653-000\Contract 1B\CADD\Bridge\Br_No433\BB04_br1-433.dgn 2/5/2015 10:12:37 AM

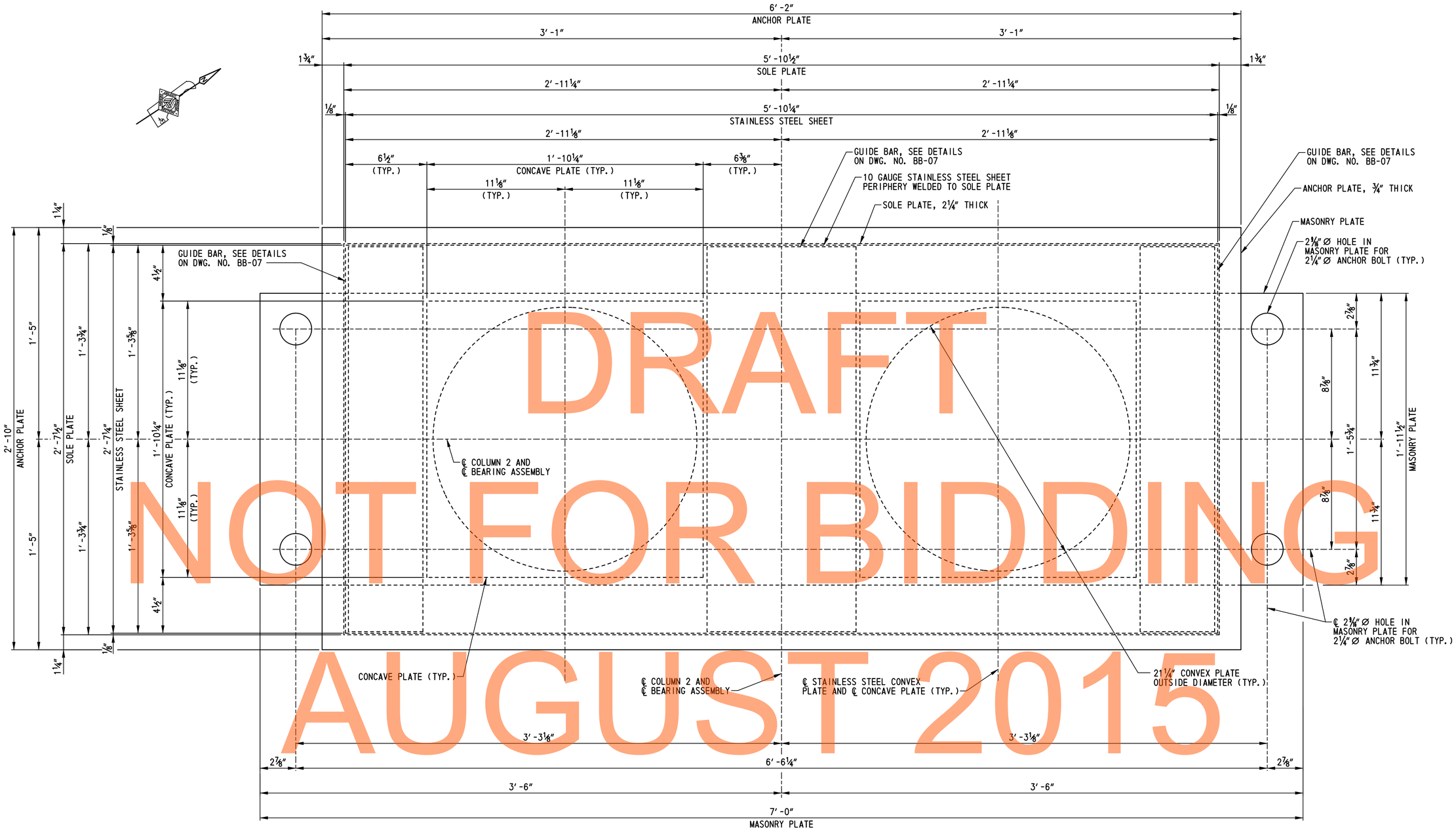

DRAFT
NOT FOR BIDDING
AUGUST 2015

GUIDED BEARING PLAN

SCALE: 3″=1′-0″

NOTES:

1. FOR ADDITIONAL INFORMATION AND MATERIAL SPECIFICATIONS, SEE DWG. NO. BB-01.
2. CAP SCREWS NOT SHOWN FOR CLARITY.
3. ANCHOR BOLTS, NUTS AND PLATE WASHERS NOT SHOWN FOR CLARITY. FOR ANCHOR BOLT DETAIL, SEE DWG. NO. BB-01.
4. ANCHOR STUDS AND POST TENSIONED CONCRETE PIER CAP NOT SHOWN FOR CLARITY. FOR ANCHOR PLATE PLAN, SEE DWG. NO. BB-06.

BR1-3
BB-05

N:\31653-000\Contract 1B\CADD\Bridge\Br_No433\BB05_br1-433.dgn
2/5/2013 10:19:07 AM

DELAWARE DEPARTMENT OF TRANSPORTATION	ADDENDUMS / REVISIONS	SCALE: AS SHOWN	US 301 & SR 1 INTERCHANGE	CONTRACT T200911302	BRIDGE NO. 1-433	PIER 1 GUIDED EXPANSION BEARING DETAILS – 1
				COUNTY NEW CASTLE	DESIGNED BY: W.T.R.	SHEET NO. 250
					CHECKED BY: B.K.B.	TOTAL SHTS. 491

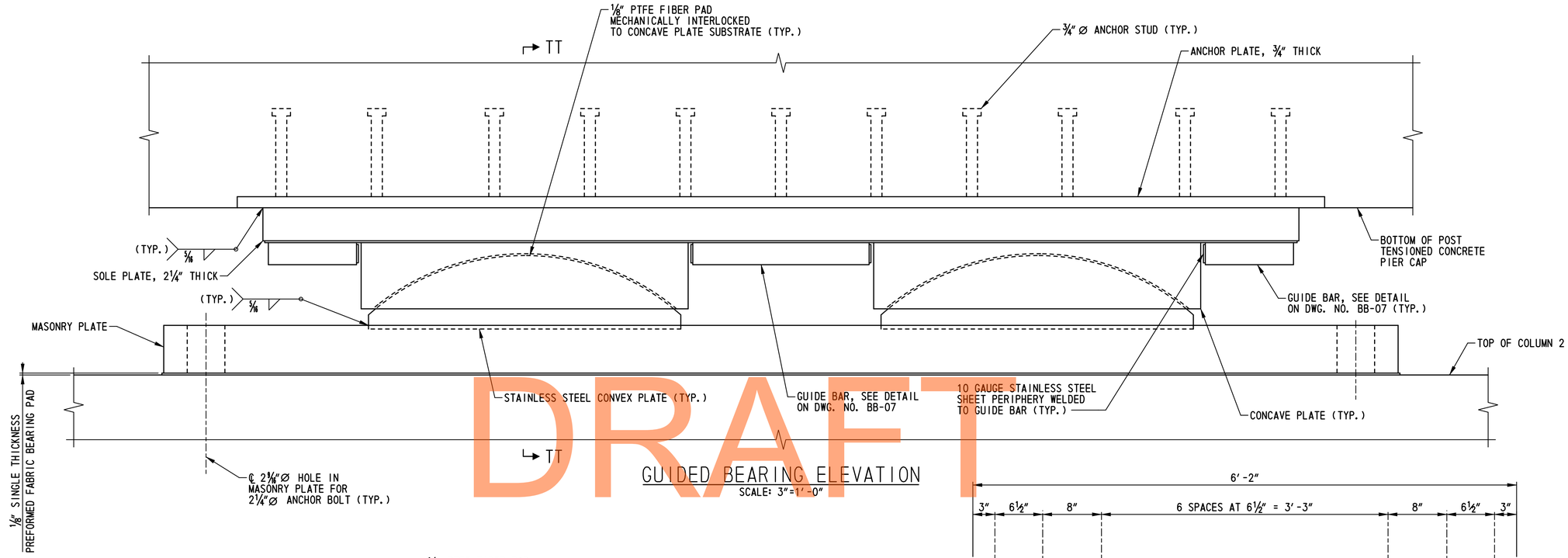

GUIDED BEARING ELEVATION

SCALE: 3"=1'-0"

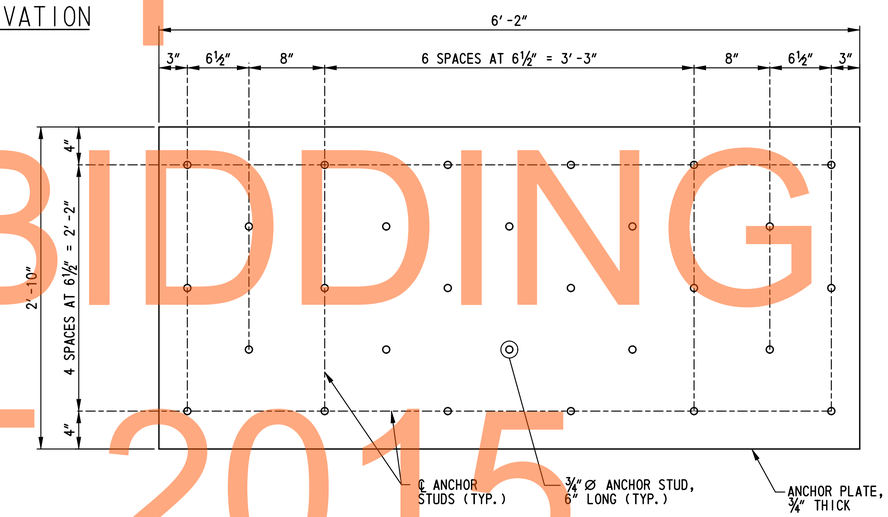

ANCHOR PLATE PLAN

SCALE: 1/4"=1'-0"

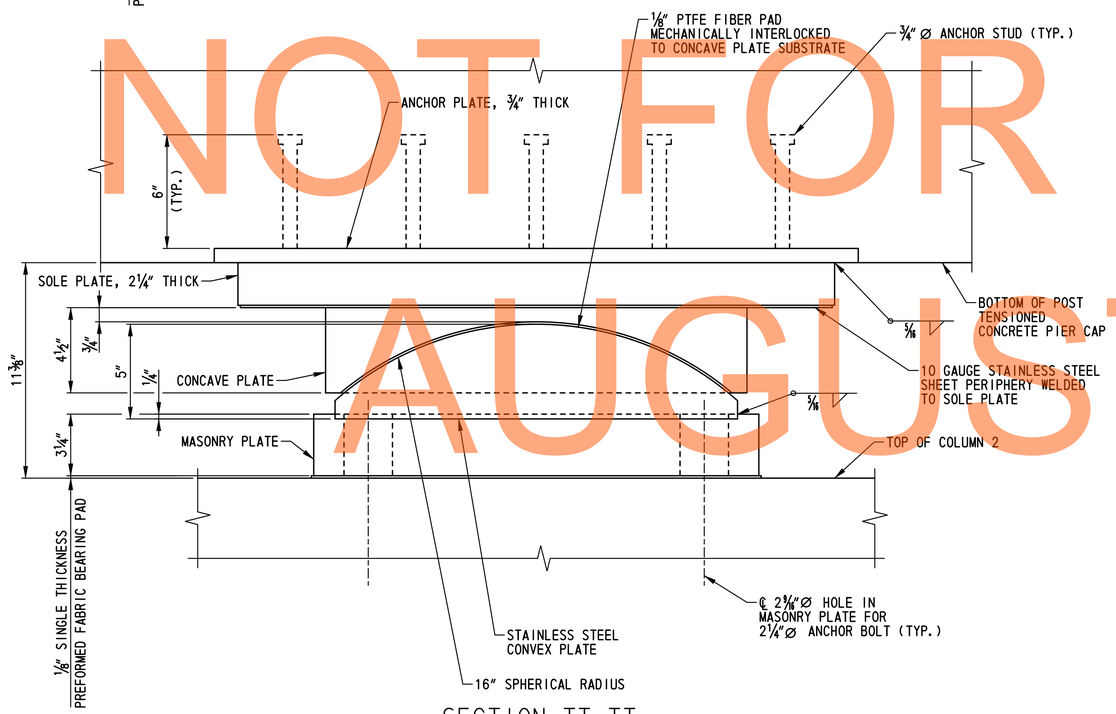

SECTION TT-TT

SCALE: 3"=1'-0"

NOTES:

1. FOR ADDITIONAL INFORMATION AND MATERIAL SPECIFICATIONS, SEE DWG. NO. BB-01.
2. CAP SCREWS NOT SHOWN FOR CLARITY.
3. ANCHOR BOLTS, NUTS AND PLATE WASHERS NOT SHOWN FOR CLARITY. FOR ANCHOR BOLT DETAIL, SEE DWG. NO. BB-01.

DRAFT
NOT FOR BIDDING
AUGUST 2015

DELAWARE DEPARTMENT OF TRANSPORTATION	ADDENDUMS / REVISIONS	SCALE: AS SHOWN	US 301 & SR 1 INTERCHANGE	CONTRACT T200911302	BRIDGE NO. 1-433	PIER 1 GUIDED EXPANSION BEARING DETAILS - 2	BR1-3 BB-06
				COUNTY NEW CASTLE	DESIGNED BY: W.T.R.		SHEET NO. 251
					CHECKED BY: B.K.B.		TOTAL SHTS. 491

N:\3653-000\Contract 1B\CADD\Bridge\Br_No433\BB06_br1-433.dgn
2/5/2013 10:19:52 AM

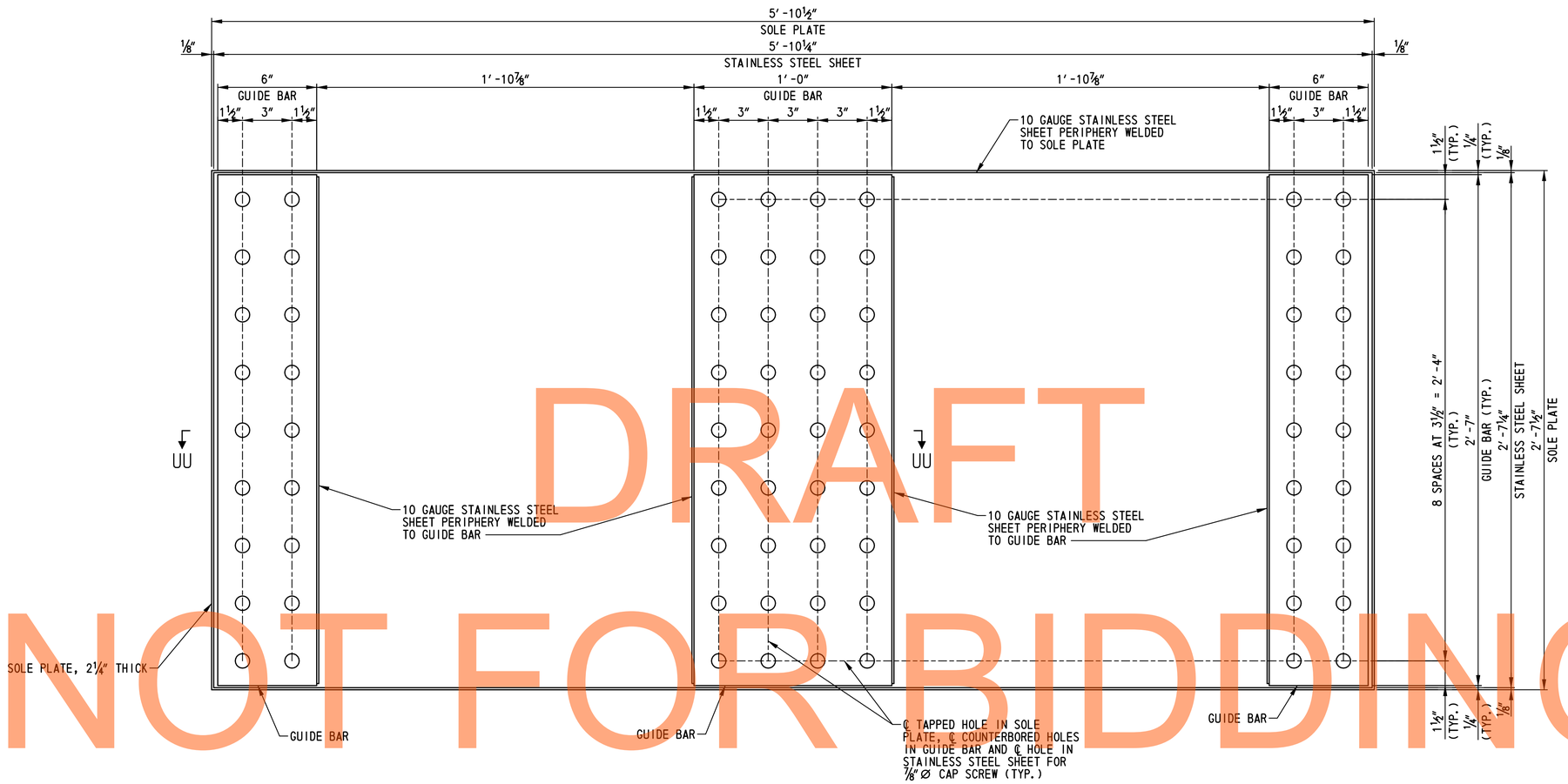

GUIDE BAR DETAILS

SCALE: 3"=1'-0"

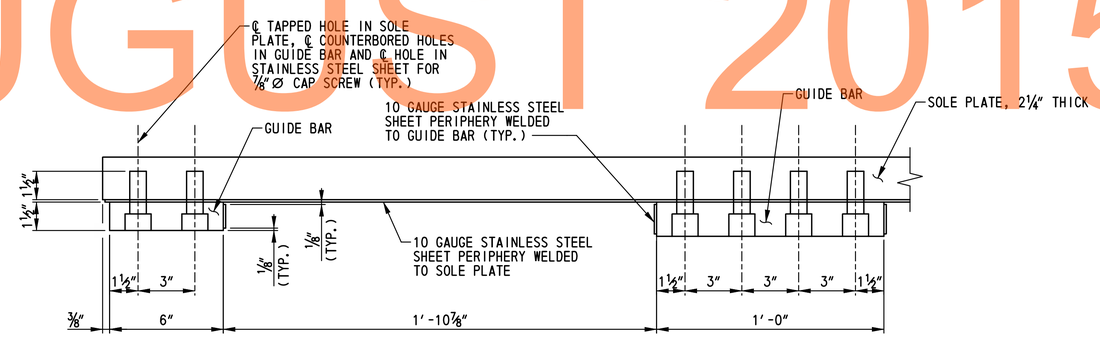

SECTION UU-UU

SCALE: 3"=1'-0"

NOTE:
FOR ADDITIONAL INFORMATION AND MATERIAL SPECIFICATIONS, SEE DWG. NO. BB-01.

DRAFT
NOT FOR BIDDING
AUGUST 2015

N:\31653-000\Contract 1B\CADD\Bridge\Br_No433\BB07_br1-433.dgn
2/5/2015 10:14:13 AM

DELAWARE DEPARTMENT OF TRANSPORTATION	ADDENDUMS / REVISIONS	SCALE: AS SHOWN	US 301 & SR 1 INTERCHANGE	CONTRACT T200911302	BRIDGE NO. 1-433	PIER 1 GUIDED EXPANSION BEARING DETAILS – 3	BR1-3 BB-07
				COUNTY NEW CASTLE	DESIGNED BY: W.T.R.		SHEET NO. 252
					CHECKED BY: B.K.B.		TOTAL SHTS. 491

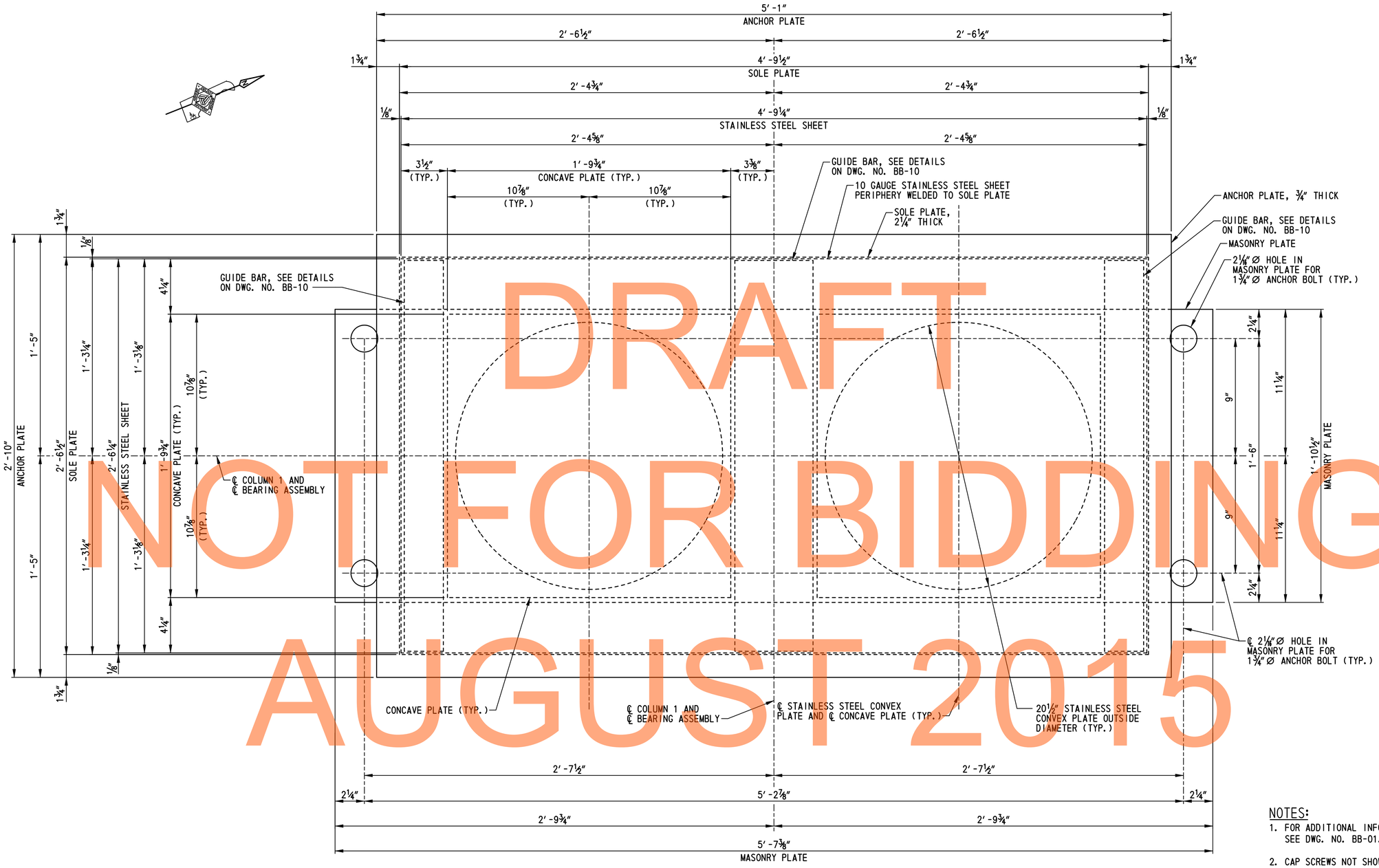

DRAFT
NOT FOR BIDDING
AUGUST 2015

GUIDED BEARING PLAN
SCALE: 3"=1'-0"

NOTES:

1. FOR ADDITIONAL INFORMATION AND MATERIAL SPECIFICATIONS, SEE DWG. NO. BB-01.
2. CAP SCREWS NOT SHOWN FOR CLARITY.
3. ANCHOR BOLTS, NUTS AND PLATE WASHERS NOT SHOWN FOR CLARITY. FOR ANCHOR BOLT DETAIL, SEE DWG. NO. BB-01.
4. ANCHOR STUDS AND POST TENSIONED CONCRETE PIER CAP NOT SHOWN FOR CLARITY. FOR ANCHOR PLATE PLAN, SEE DWG. NO. BB-09.

BR1-3
BB-08

DELAWARE DEPARTMENT OF TRANSPORTATION	ADDENDUMS / REVISIONS	SCALE: AS SHOWN	US 301 & SR 1 INTERCHANGE	CONTRACT T200911302	BRIDGE NO. 1-433	PIER 3 GUIDED EXPANSION BEARING DETAILS - 1	SHEET NO. 253
				COUNTY NEW CASTLE	DESIGNED BY: W.T.R.		TOTAL SHTS. 491
					CHECKED BY: B.K.B.		

N:\31653-000\Contract 1B\CADD\Bridge\Br_No433\BB08_br1-433.dgn
2/5/2013 10:14:48 AM

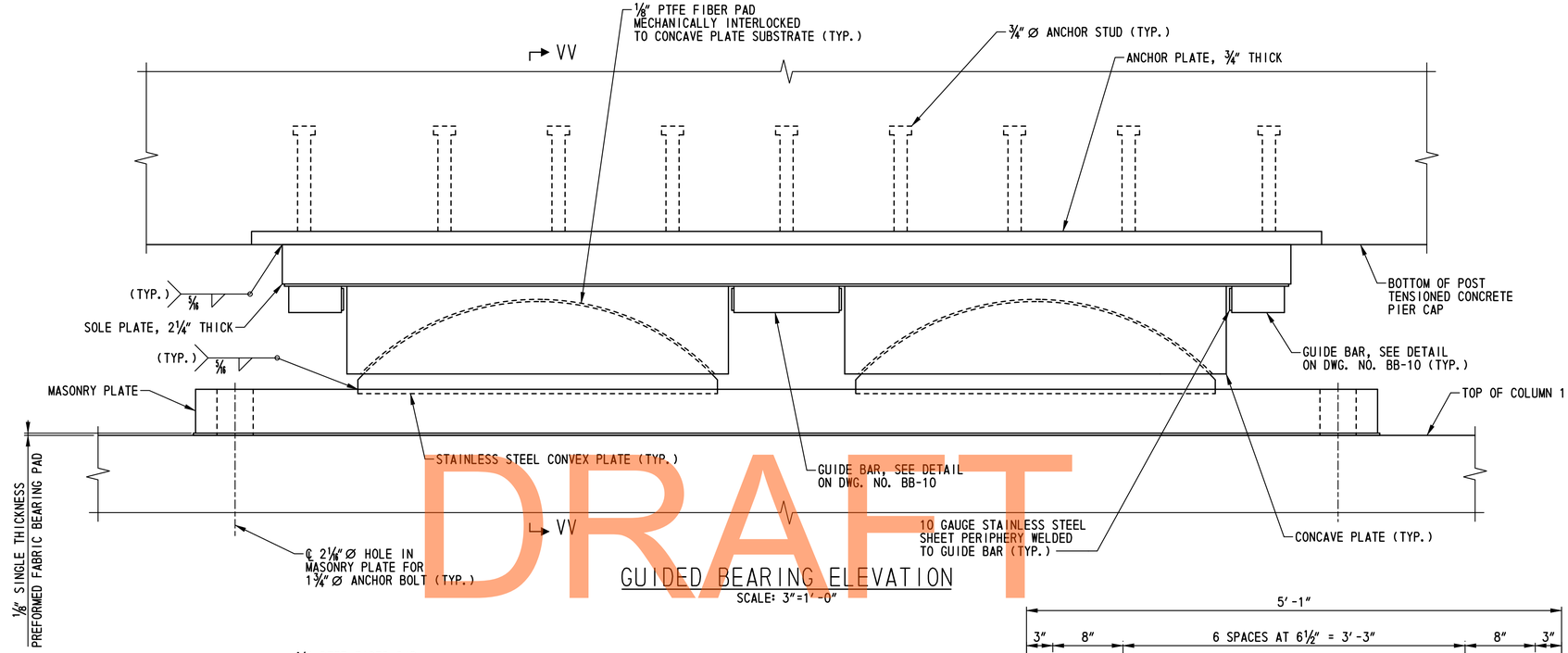

GUIDED BEARING ELEVATION

SCALE: 3"=1'-0"

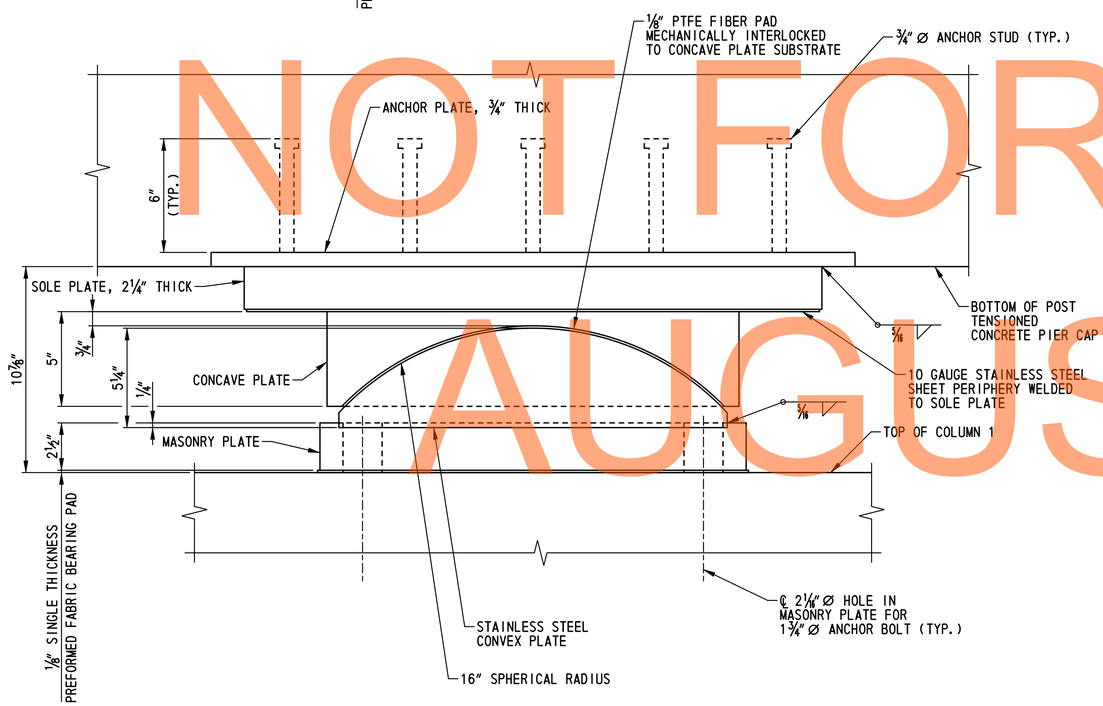

SECTION VV-VV

SCALE: 3"=1'-0"

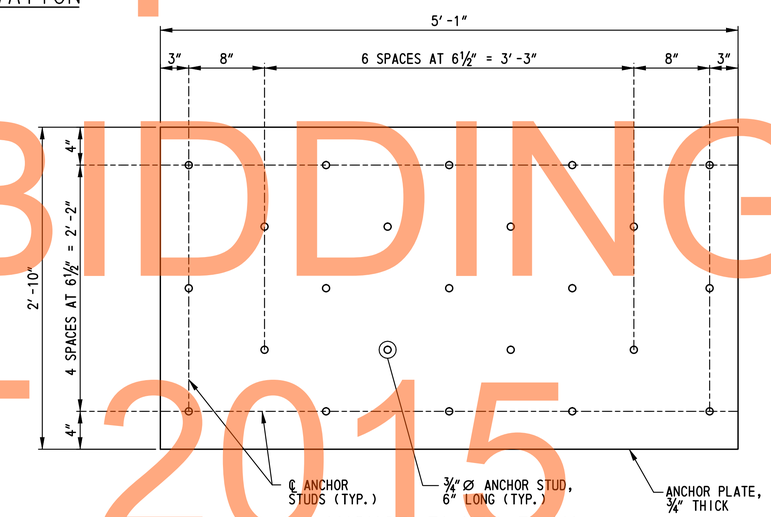

ANCHOR PLATE PLAN

SCALE: ¼"=1'-0"

NOTES:

1. FOR ADDITIONAL INFORMATION AND MATERIAL SPECIFICATIONS, SEE DWG. NO. BB-01.
2. CAP SCREWS NOT SHOWN FOR CLARITY.
3. ANCHOR BOLTS, NUTS AND PLATE WASHERS NOT SHOWN FOR CLARITY. FOR ANCHOR BOLT DETAIL, SEE DWG. NO. BB-01.

DRAFT
NOT FOR BIDDING
AUGUST 2015

N:\31653-000\Contract 1B\CADD\Bridge\Br_No433\BB09_br1-433.dgn
2/5/2013 10:15:11 AM

DELAWARE DEPARTMENT OF TRANSPORTATION	ADDENDUMS / REVISIONS	SCALE: AS SHOWN	US 301 & SR 1 INTERCHANGE	CONTRACT T200911302	BRIDGE NO. 1–433	PIER 3 GUIDED EXPANSION BEARING DETAILS – 2	BR1–3 BB–09
				COUNTY NEW CASTLE	DESIGNED BY: W.T.R.		SHEET NO. 254
					CHECKED BY: B.K.B.		TOTAL SHTS. 491

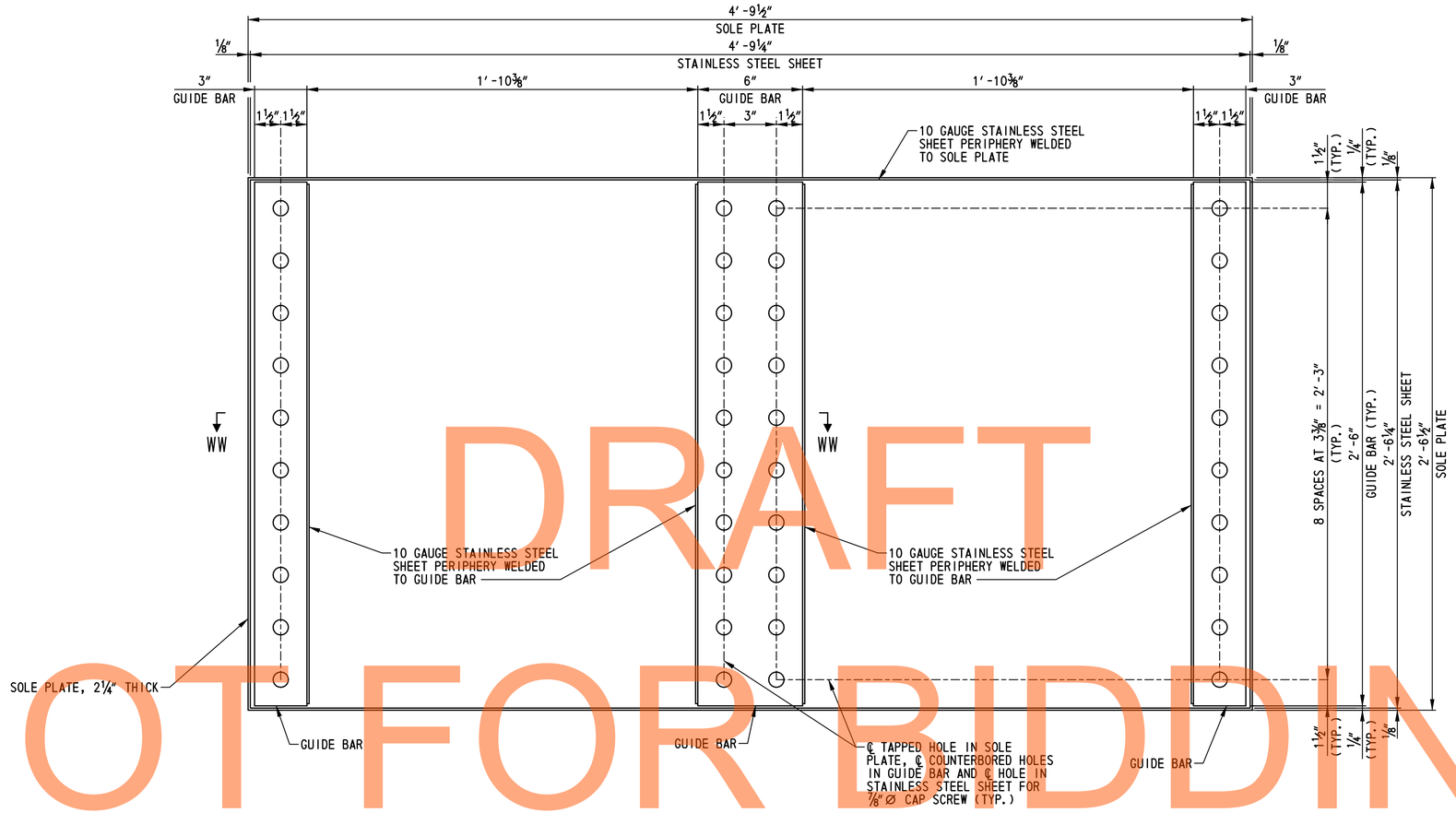

GUIDE BAR DETAILS

SCALE: 3"=1'-0"

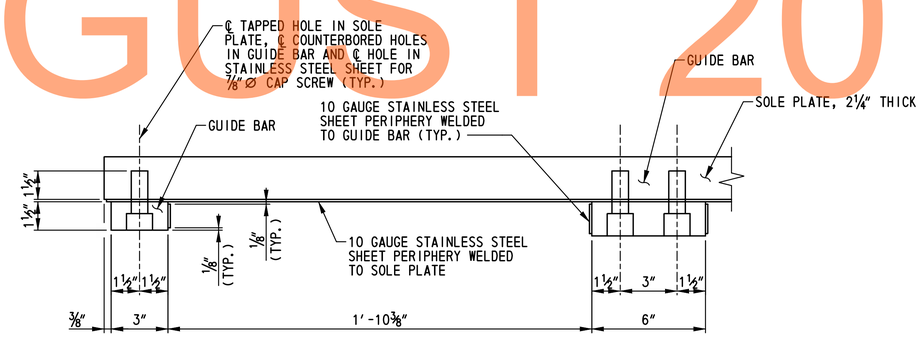

SECTION WW-WW

SCALE: 3"=1'-0"

NOTE:
FOR ADDITIONAL INFORMATION AND MATERIAL SPECIFICATIONS, SEE DWG. NO. BB-01.

DRAFT
NOT FOR BIDDING
AUGUST 2015

N:\31653-000\Contract 1B\CADD\Bridge\Br_No433\BB10_br1-433.dgn
2/5/2015 10:15:32 AM

DELAWARE DEPARTMENT OF TRANSPORTATION	ADDENDUMS / REVISIONS	SCALE: AS SHOWN	US 301 & SR 1 INTERCHANGE	CONTRACT T200911302	BRIDGE NO. 1-433	PIER 3 GUIDED EXPANSION BEARING DETAILS – 3	BR1-3 BB-10
				COUNTY NEW CASTLE	DESIGNED BY: W.T.R.		SHEET NO. 255
					CHECKED BY: B.K.B.		TOTAL SHTS. 491

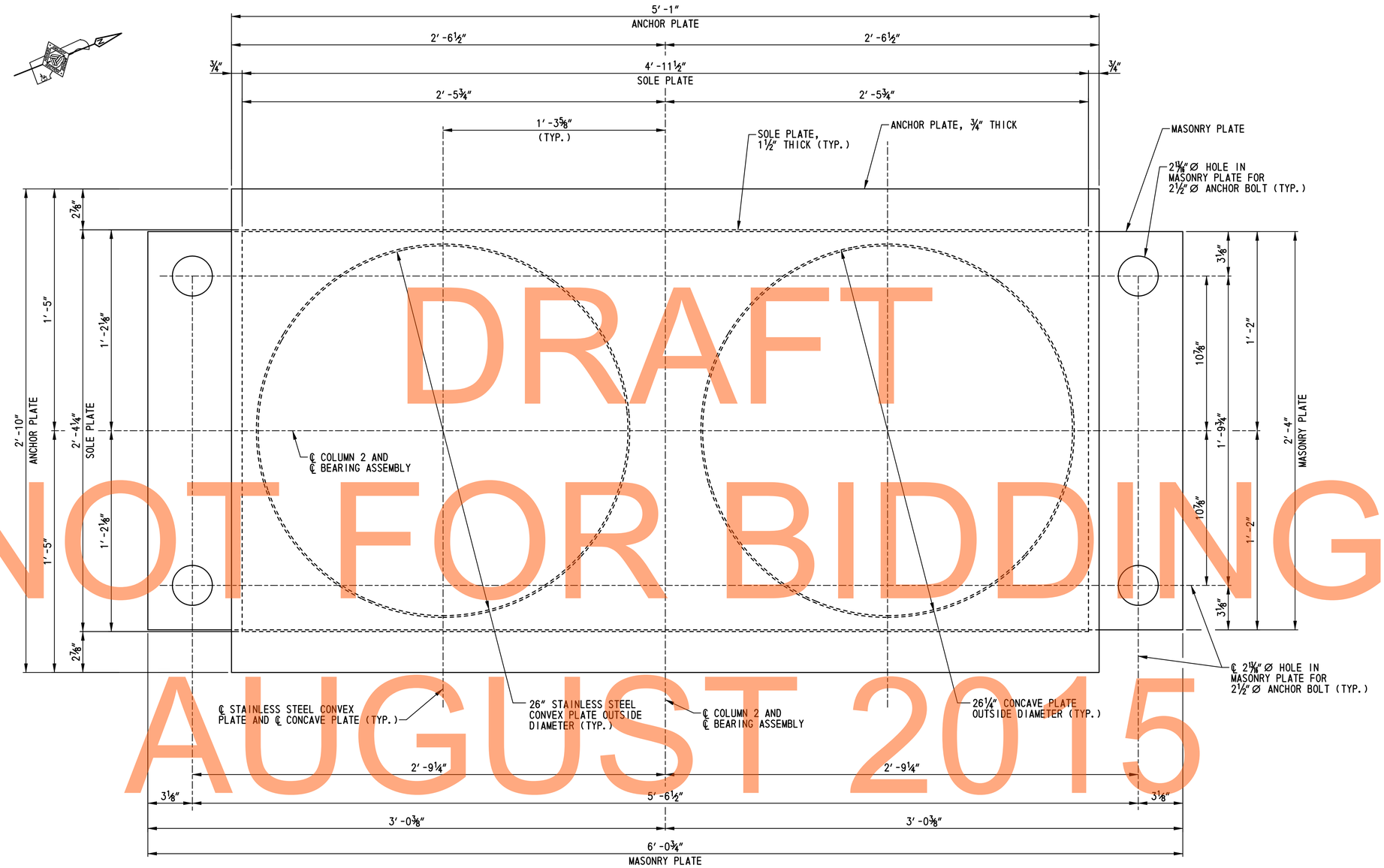

DRAFT
NOT FOR BIDDING
AUGUST 2015

FIXED BEARING PLAN

SCALE: 3″=1′-0″

NOTES:

1. FOR ADDITIONAL INFORMATION AND MATERIAL SPECIFICATIONS, SEE DWG. NO. BB-01.
2. ANCHOR BOLTS, NUTS AND PLATE WASHERS NOT SHOWN FOR CLARITY. FOR ANCHOR BOLT DETAIL, SEE DWG. NO. BB-01.
3. ANCHOR STUDS AND POST TENSIONED CONCRETE PIER CAP NOT SHOWN FOR CLARITY. FOR ANCHOR PLATE PLAN, SEE DWG. NO. BB-12.

N:\31653-000\Contract 1B\CADD\Bridge\Br_No433\BB11_br1-433.dgn
2/5/2013 10:19:59 AM

DELAWARE DEPARTMENT OF TRANSPORTATION	ADDENDUMS / REVISIONS	SCALE: AS SHOWN	US 301 & SR 1 INTERCHANGE	CONTRACT T200911302	BRIDGE NO. 1–433	PIER 3 FIXED BEARING DETAILS – 1	BR1–3 BB–11
				COUNTY NEW CASTLE	DESIGNED BY: W.T.R.		SHEET NO. 256
					CHECKED BY: B.K.B.		TOTAL SHTS. 491

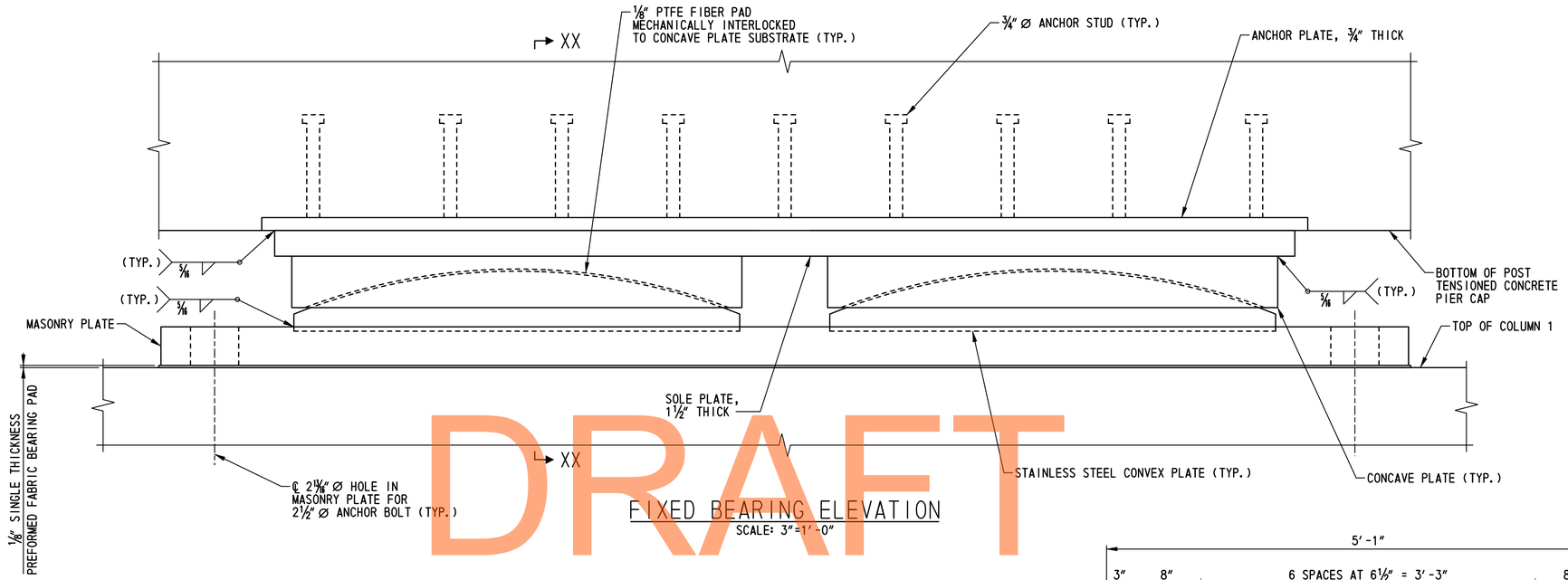

FIXED BEARING ELEVATION

SCALE: 3"=1'-0"

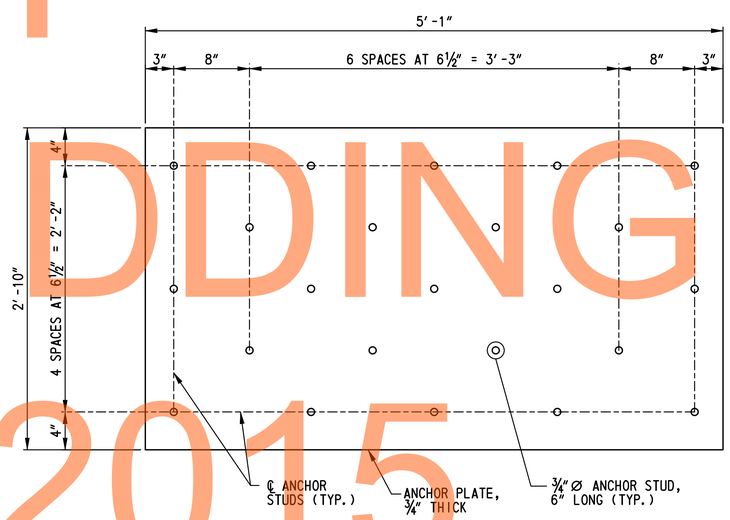

ANCHOR PLATE PLAN

SCALE: 1/4"=1'-0"

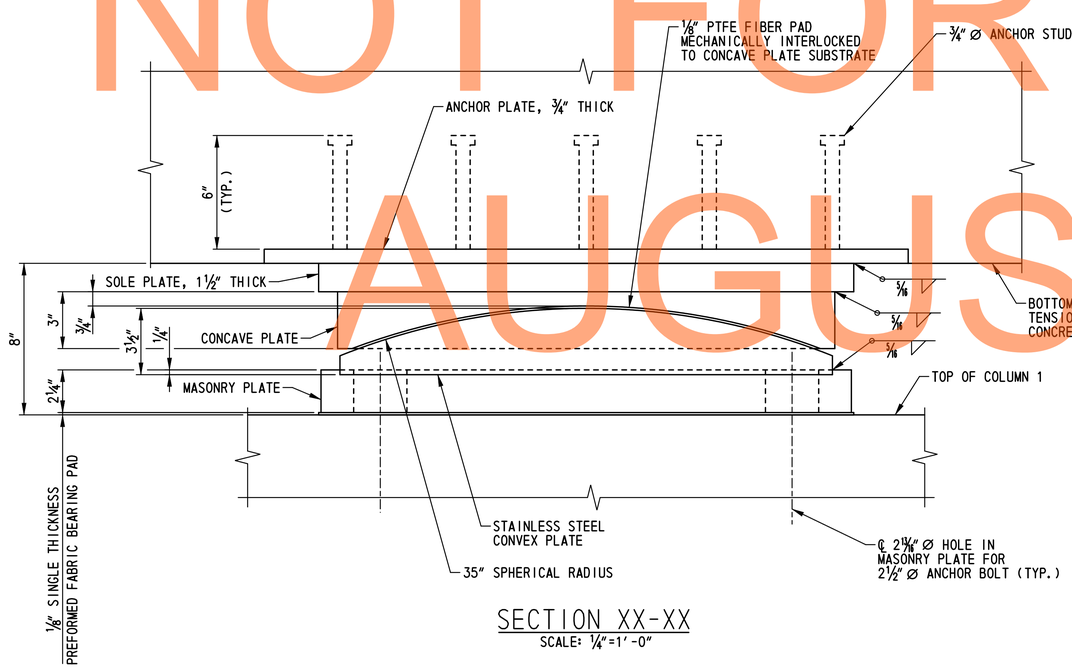

SECTION XX-XX

SCALE: 1/4"=1'-0"

NOTES:

1. FOR ADDITIONAL INFORMATION AND MATERIAL SPECIFICATIONS, SEE DWG. NO. BB-01.
2. ANCHOR BOLTS, NUTS AND PLATE WASHERS NOT SHOWN FOR CLARITY. FOR ANCHOR BOLT DETAIL, SEE DWG. NO. BB-01.

DRAFT
NOT FOR BIDDING
AUGUST 2015

N:\31653-000\Contract 19\CADD\Bridge\Br_No433\BB12_br1-433.dgn
2/5/2015 10:20:29 AM

DELAWARE DEPARTMENT OF TRANSPORTATION	ADDENDUMS / REVISIONS	SCALE: AS SHOWN	US 301 & SR 1 INTERCHANGE	CONTRACT T200911302	BRIDGE NO. 1-433	PIER 3 FIXED BEARING DETAILS – 2	BR1-3 BB-12
				COUNTY NEW CASTLE	DESIGNED BY: W.T.R.		SHEET NO. 257
					CHECKED BY: B.K.B.		TOTAL SHTS. 491

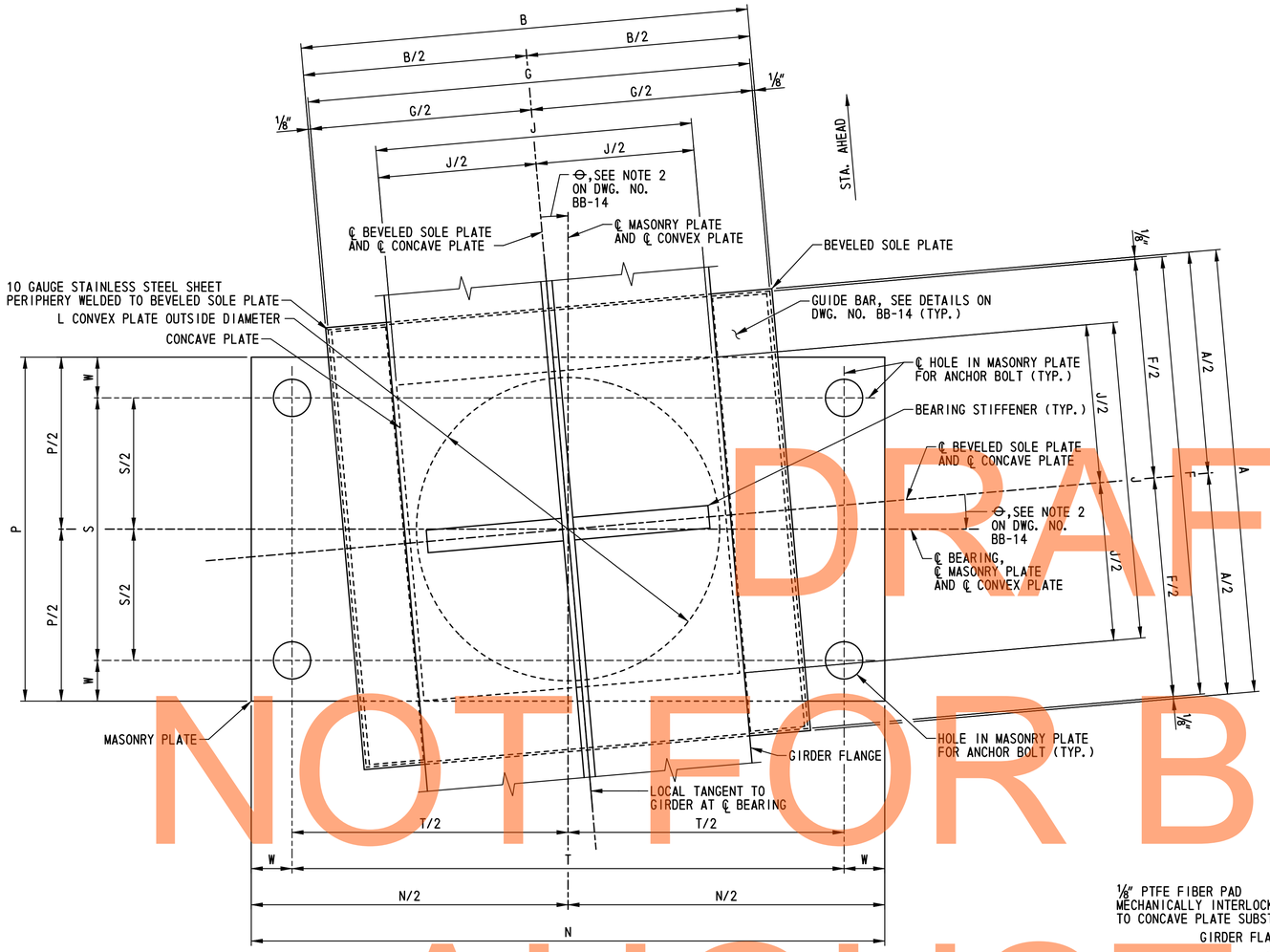

GUIDED EXPANSION BEARING PLAN

SCALE: 3"=1'-0"

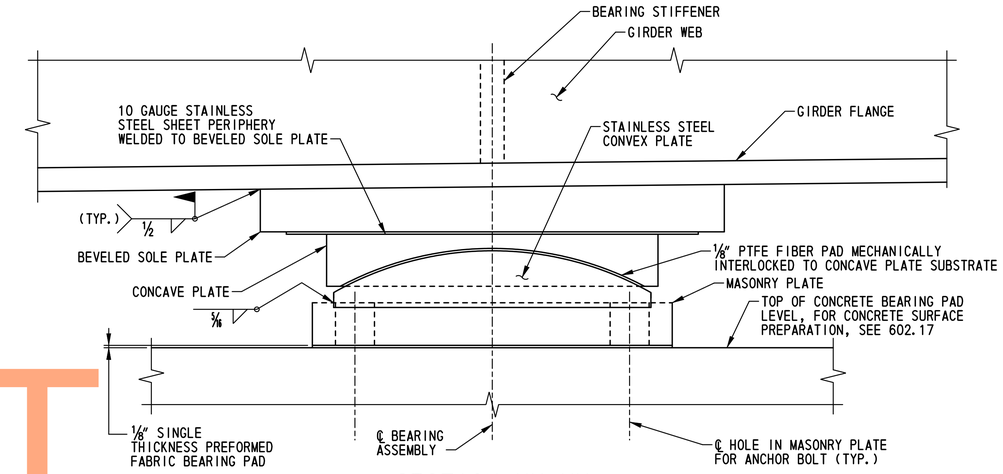

SECTION YY-YY

SCALE: 3"=1'-0"

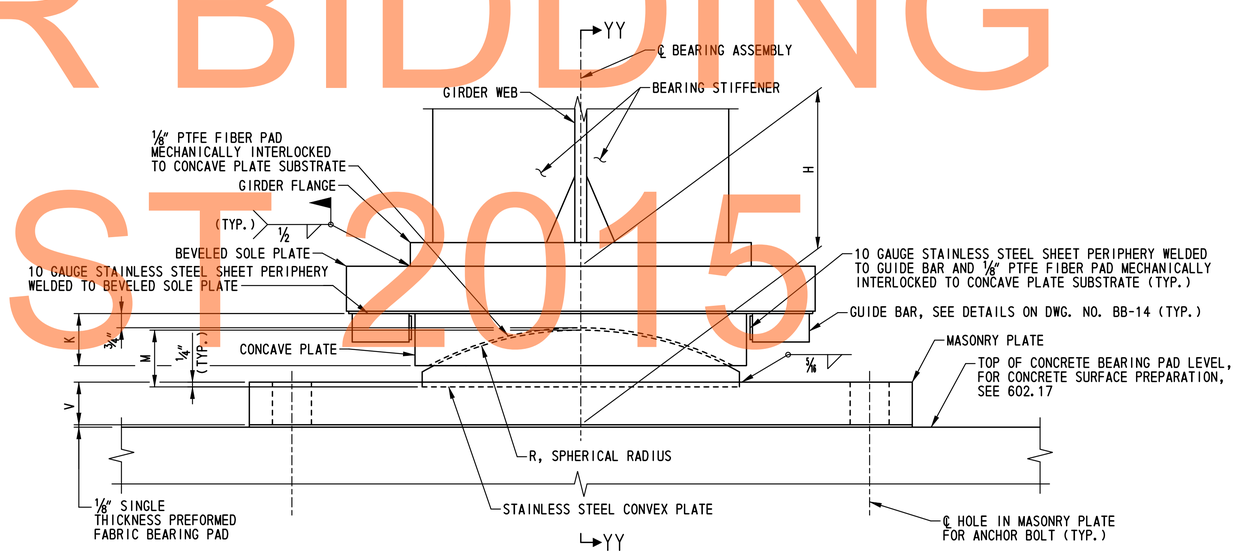

GUIDED EXPANSION BEARING ELEVATION

SCALE: 3"=1'-0"

NOTE:

FOR GUIDED EXPANSION BEARING NOTES, SEE DWG. NO. BB-14.

DRAFT
NOT FOR BIDDING
AUGUST 2015

N:\31653-000\Contract 18\CADD\Bridge\Br_No433\BB13_Br1-433.dgn
2/5/2013 10:20:06 AM

DELAWARE DEPARTMENT OF TRANSPORTATION	ADDENDUMS / REVISIONS	SCALE: AS SHOWN	US 301 & SR 1 INTERCHANGE	CONTRACT T200911302	BRIDGE NO. 1-433	GUIDED EXPANSION BEARING DETAILS – 1	BR1-3 BB-13
				COUNTY NEW CASTLE	DESIGNED BY: W.T.R.		SHEET NO. 258
					CHECKED BY: B.K.B.		TOTAL SHTS. 491

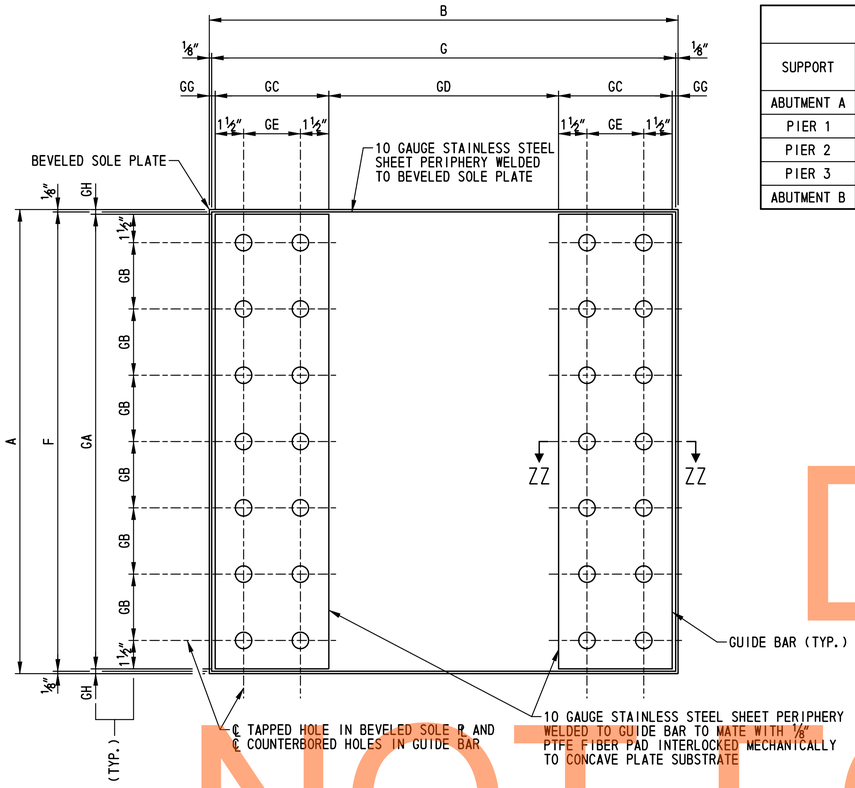

GUIDE BAR DETAILS
SCALE: 3"=1'-0"

GUIDED EXPANSION BEARINGS - LINEAR DIMENSIONS (INCHES)																														
SUPPORT	GIRDER	BEVELED SOLE PLATE							GUIDE BARS								CONCAVE PLATE & CONVEX PLATE					MASONRY PLATE						BEARING HEIGHT	ANCHOR BOLTS		
		A	B	C	D	E	F	G	GA	GB	GC	GD	GE	GF	GG	GH	J	K	L	M	R	N	P	S	T	V	W	H	QTY.	BOLT ∅	HOLE ∅
ABUTMENT A	②③④	19¼	19¾	2¼	2 7/16	2⅝	19	19½	18¾	5¼	3	12⅛	0	1½	13/16	¼	11½	2¼	10¼	2½	9	28½	12½	8¾	24¾	1¾	1⅞	7 7/16	4	1½	1 13/16
PIER 1	②③④	24½	23½	2¼	2⅜	2½	24¼	23¼	24	3½	3	16⅞	0	1½	5/16	¼	16¼	2½	15¼	2¾	16	33½	17½	13	29	2¼	2¼	8⅛	4	1¾	2 1/16
PIER 2	①⑤	31	29½	2½	2⅜	2¼	30¾	29¼	30	3	6	16⅞	3	1½	⅜	½	16¼	5½	14¾	5¾	8	45½	17	10	38½	3¼	3½	12⅛	4	2¾	3 1/16
PIER 3	②③④	27½	25¼	2¾	2½	2¼	27¼	25	27	3	3	18⅝	0	1½	⅝	¼	18	2¾	17¼	3	18	35½	19½	15	31	2¼	2¼	8½	4	1¾	2 1/16
ABUTMENT B	②③④	21½	22½	2⅞	2 9/16	2¼	21¼	22¼	21	6	3	13⅝	0	1½	1 1/16	¼	13	2½	11¾	2¾	10	31½	14	10¼	27¾	1¾	1⅞	7 15/16	4	1½	1 13/16

GUIDED EXPANSION BEARINGS - ANGULAR DIMENSIONS		
SUPPORT	GIRDER	⊖
ABUTMENT A	②③④	4°-55′-48″
PIER 1	②③④	2°-36′-47″
PIER 2	①⑤	90°-00′-00″
PIER 3	②③④	-3°-12′-32″
ABUTMENT B	②③④	-5°-56′-56″

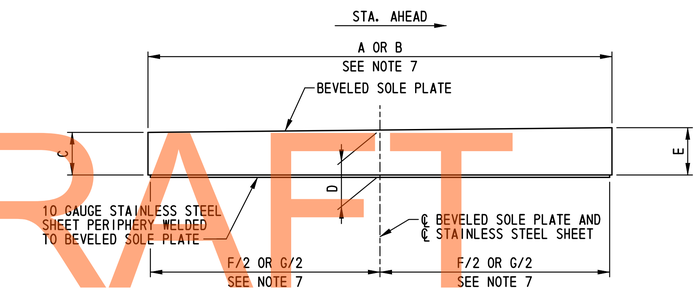

BEVELED SOLE PLATE DETAIL
SCALE: 3"=1'-0"

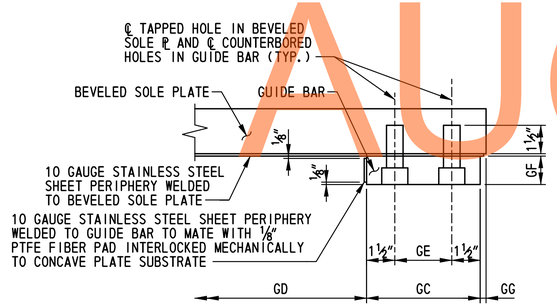

SECTION ZZ-ZZ
SCALE: 3"=1'-0"

NOTES:

1. FOR ADDITIONAL INFORMATION AND MATERIAL SPECIFICATIONS, SEE DWG. NO. BB-01.
2. FOR ⊖, SEE ANGULAR DIMENSIONS TABLE ON THIS SHEET. ANGULAR DIMENSIONS ARE MEASURED POSITIVE IN THE CLOCKWISE DIRECTION AS SHOWN.
3. FOR DIMENSIONS A, B, C, D, E, F, G, H, J, K, L, M, N, P, R, S, T, V, W, GA, GB, GC, GD, GE, GF, GG AND GH. SEE LINEAR DIMENSIONS TABLE ON THIS SHEET.
4. BEARING HEIGHT H IS MEASURED FROM THE TOP OF THE CONCRETE BEARING PAD TO THE TOP OF THE BEVELED SOLE PLATE AT THE CENTER LINE OF BEARING.
5. CAP SCREW NOT SHOWN IN GUIDED EXPANSION BEARING PLAN, GUIDED EXPANSION BEARING ELEVATION AND SECTION YY-YY FOR CLARITY.
6. ANCHOR BOLTS, NUTS AND PLATE WASHERS NOT SHOWN FOR CLARITY. FOR ANCHOR BOLT DETAIL, SEE DWG. NO. BB-01.
7. FOR ANGLE ⊖ LESS THAN OR EQUAL TO 45°-00′-00″, USE DIMENSIONS A AND F. FOR ANGLE ⊖ GREATER THAN 45°-00′-00″, USE DIMENSIONS B AND G.
8. MATCH MARK ORIENTATION OF SOLE PLATE TO INSURE PROPER INSTALLATION IN THE FIELD, SEE SHOP NOTE 5 ON DWG. NO. BB-01.

DRAFT
NOT FOR BIDDING
AUGUST 2015

BR1-3
BB-14

DELAWARE DEPARTMENT OF TRANSPORTATION

ADDENDUMS / REVISIONS

SCALE: AS SHOWN

US 301 & SR 1 INTERCHANGE

CONTRACT	BRIDGE NO.	1-433
T200911302	DESIGNED BY: W.T.R.	
COUNTY		
NEW CASTLE	CHECKED BY: B.K.B.	

GUIDED EXPANSION BEARING DETAILS - 2

SHEET NO. 259
TOTAL SHTS. 491

N:\31653-000\Contract 1B\CADD\Bridge\Br_No433\BB14_br1-433.dgn
2/5/2013 10:21:16 AM

NON-GUIDED EXPANSION BEARINGS - LINEAR DIMENSIONS (INCHES)

SUPPORT	GIRDER	BEVELED SOLE PLATE						CONCAVE PLATE & CONVEX PLATE					MASONRY PLATE					BEARING HEIGHT	ANCHOR BOLTS		
		A	B	C	D	E	F	G	J	K	L	R	M	N	P	S	T	H	QTY.	BOLT Ø	HOLE Ø
ABUTMENT A	15	18¾	26	1	1 1/16	1⅜	18½	11¾	2	10¾	2¼	11	37½	13	9¼	33¾	2¼	6 11/16	4	1½	1 13/16
PIER 1	15	22¾	22	1	1⅛	1¼	21¾	17	2	16¼	2¼	24	33	18½	14¾	29¼	2	6⅜	4	1½	1 13/16
PIER 3	15	24¼	22½	1¾	1½	1¼	22¼	18¼	2	17¾	2¼	28	33½	20	16¼	29¾	2	6¾	4	1½	1 13/16
ABUTMENT B	15	21¼	28	1⅝	1 5/16	1	21	13½	2½	12½	2¾	11	39½	14½	10¾	35¾	2¼	7 5/16	4	1½	1 13/16

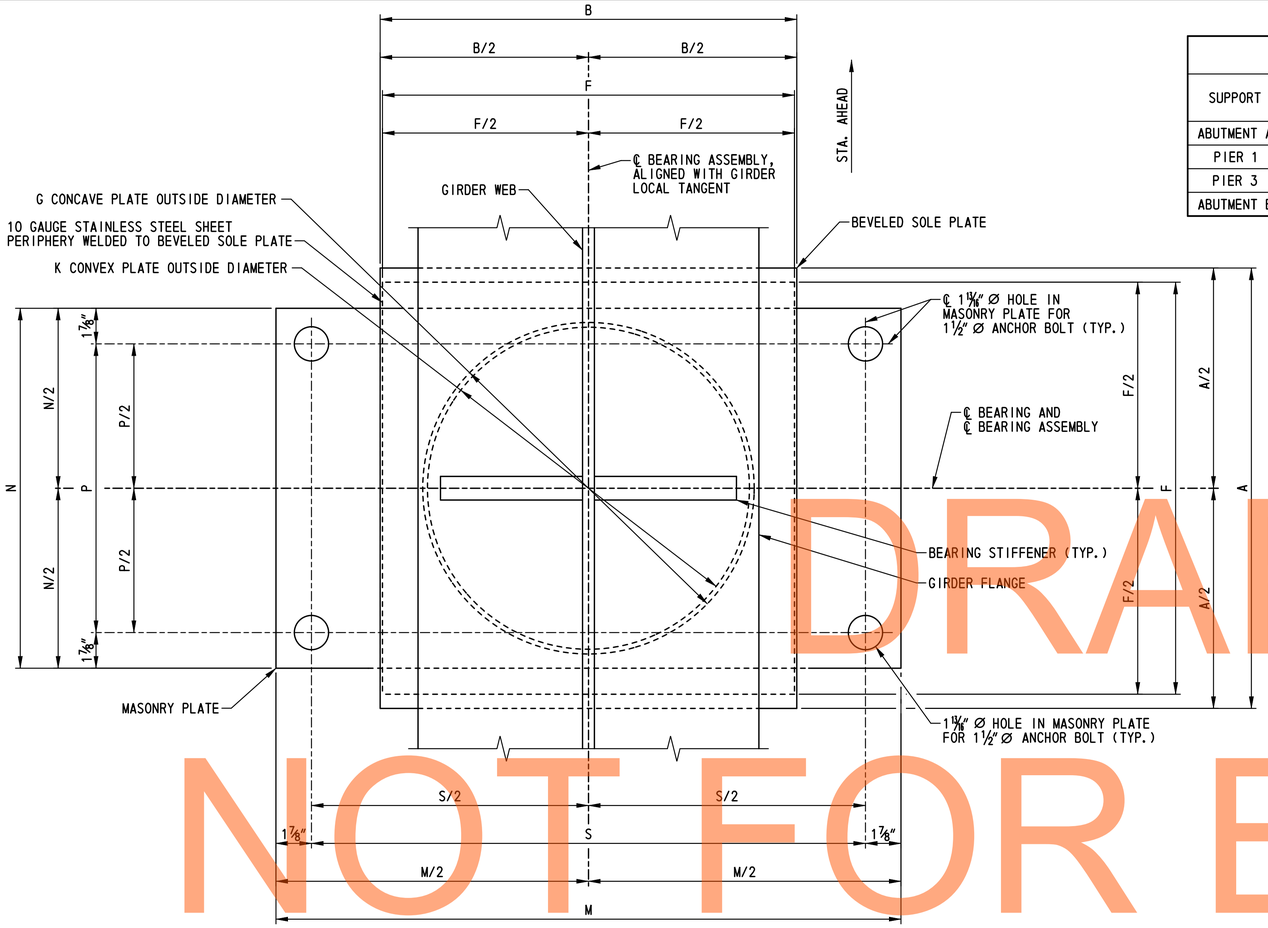

NON-GUIDED EXPANSION BEARING PLAN

SCALE: 3"=1'-0"

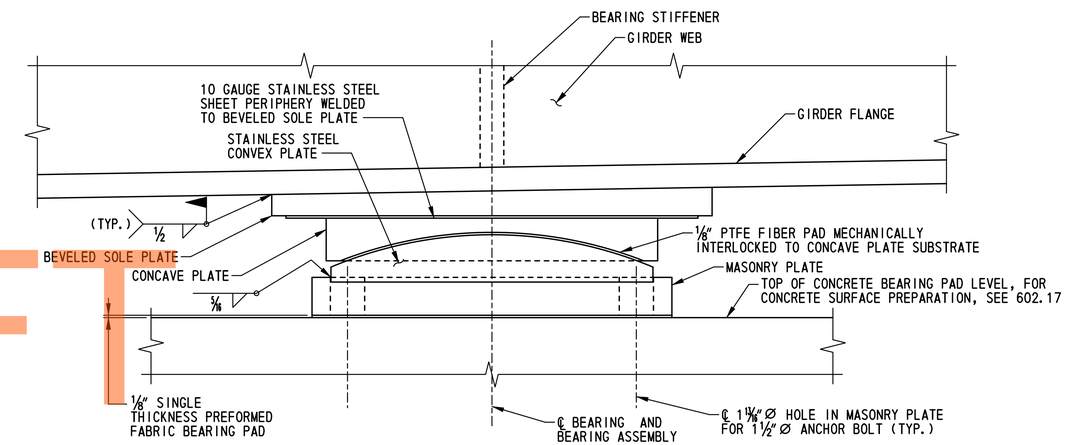

SECTION AB-AB

SCALE: 3"=1'-0"

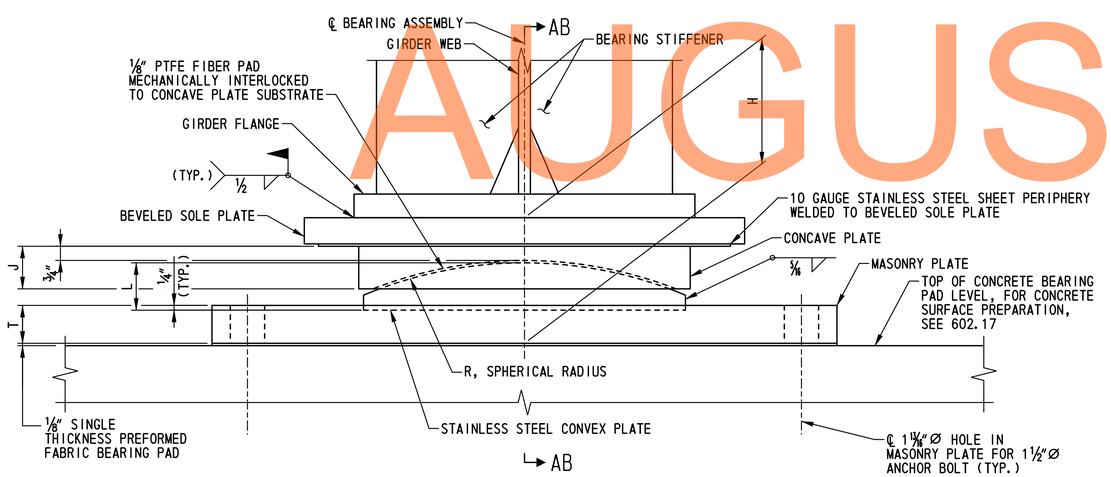

NON-GUIDED EXPANSION BEARING ELEVATION

SCALE: 3"=1'-0"

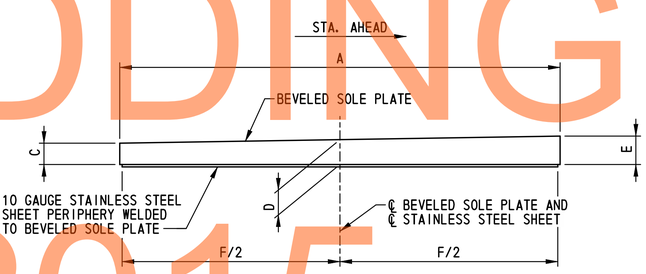

BEVELED SOLE PLATE DETAIL

SCALE: 3"=1'-0"

NOTES:

1. FOR ADDITIONAL INFORMATION AND MATERIAL SPECIFICATIONS, SEE DWG. NO. BB-01.
2. BEARING HEIGHT H IS MEASURED FROM THE TOP OF THE CONCRETE BEARING PAD TO THE TOP OF THE BEVELED SOLE PLATE AT THE CENTER LINE OF BEARING.
3. ANCHOR BOLTS, NUTS AND PLATE WASHERS NOT SHOWN FOR CLARITY. FOR ANCHOR BOLT DETAIL, SEE DWG. NO. BB-01.
4. MATCH MARK ORIENTATION OF SOLE PLATE TO INSURE PROPER INSTALLATION IN THE FIELD, SEE SHOP NOTE 5 ON DWG. NO. BB-01.

DRAFT
NOT FOR BIDDING
AUGUST 2015

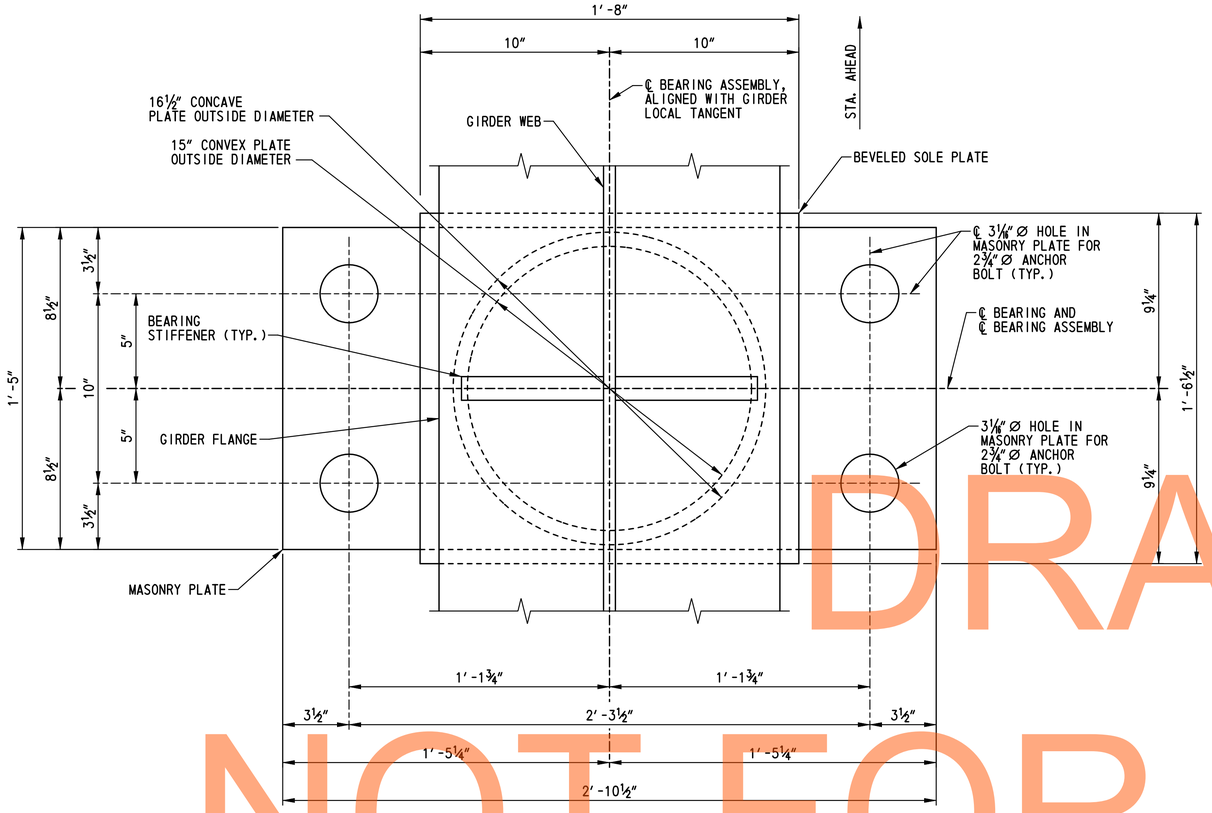

FIXED BEARING PLAN
SCALE: 3"=1'-0"

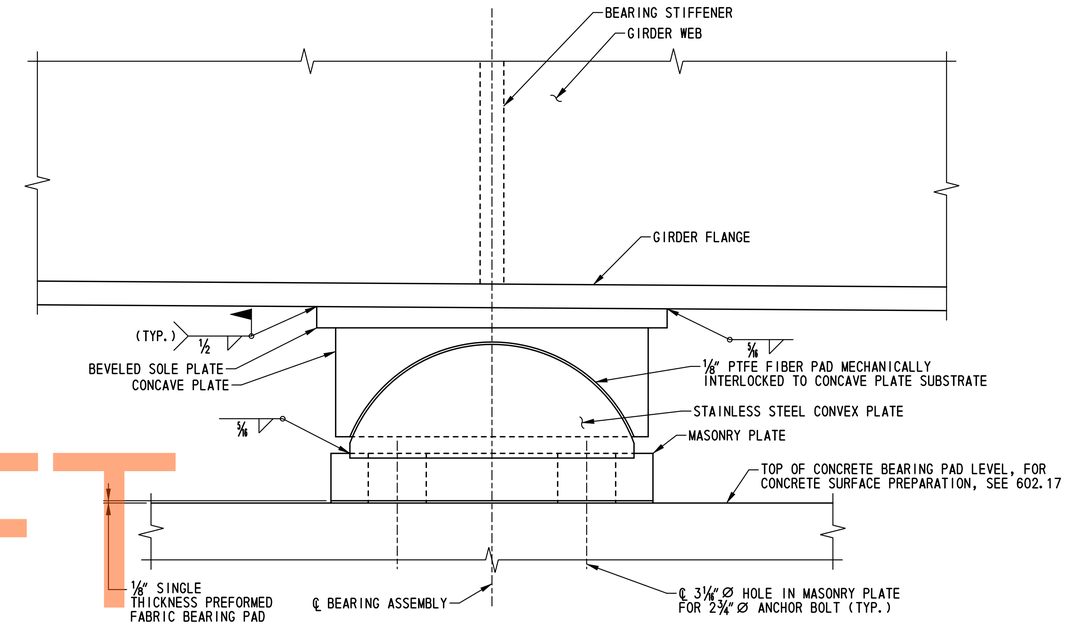

SECTION AC-AC
SCALE: 3"=1'-0"

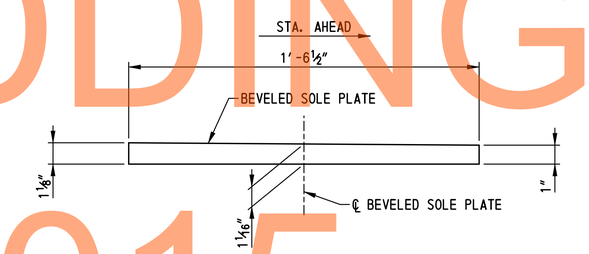

BEVELED SOLE PLATE DETAIL
SCALE: 3"=1'-0"

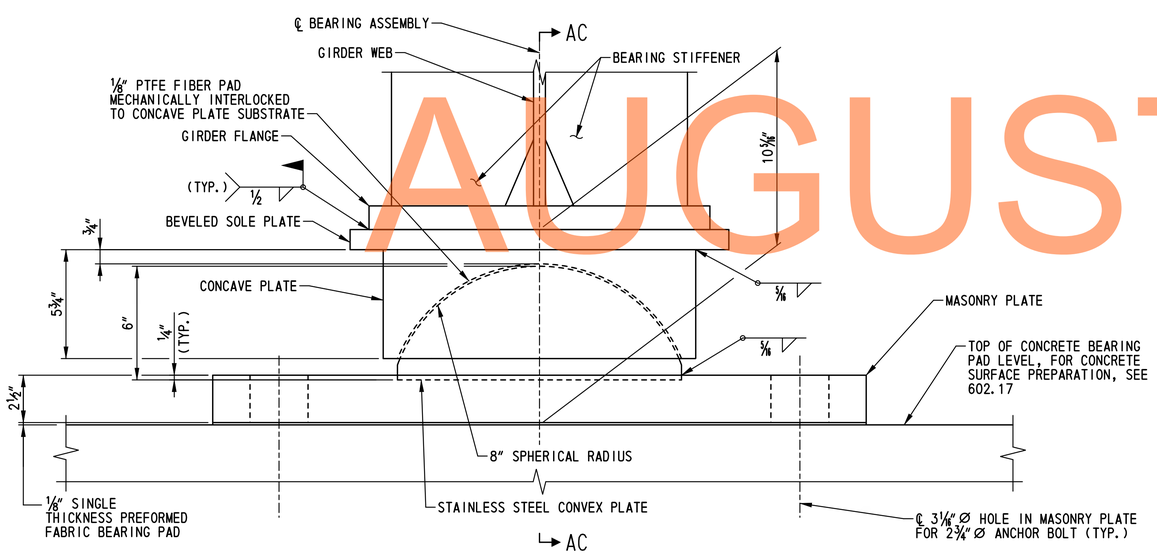

FIXED BEARING ELEVATION
SCALE: 3"=1'-0"

NOTES:

1. FOR ADDITIONAL INFORMATION AND MATERIAL SPECIFICATIONS, SEE DWG. NO. BB-01.
2. BEARING HEIGHT SHOWN IS MEASURED FROM THE TOP OF THE CONCRETE BEARING PAD TO THE TOP OF THE BEVELED SOLE PLATE AT THE CENTER LINE OF BEARING.
3. ANCHOR BOLTS, NUTS AND PLATE WASHERS NOT SHOWN FOR CLARITY. FOR ANCHOR BOLT DETAIL, SEE DWG. NO. BB-01.
4. MATCH MARK ORIENTATION OF SOLE PLATE TO ENSURE PROPER INSTALLATION IN THE FIELD, SEE SHOP NOTE 5 DWG. NO. BB-01.

DRAFT
NOT FOR BIDDING
AUGUST 2015

N:\31653-000\Contract 1B\CADD\Bridge\Br_No433\BB16_br1-433.dgn
2/5/2013 10:25:37 AM

DELAWARE DEPARTMENT OF TRANSPORTATION	ADDENDUMS / REVISIONS	SCALE: AS SHOWN	US 301 & SR 1 INTERCHANGE	CONTRACT T200911302	BRIDGE NO. 1-433	FIXED BEARING DETAILS	BR1-3 BB-16
				COUNTY NEW CASTLE	DESIGNED BY: W.T.R.		SHEET NO. 261
					CHECKED BY: B.K.B.		TOTAL SHTS. 491

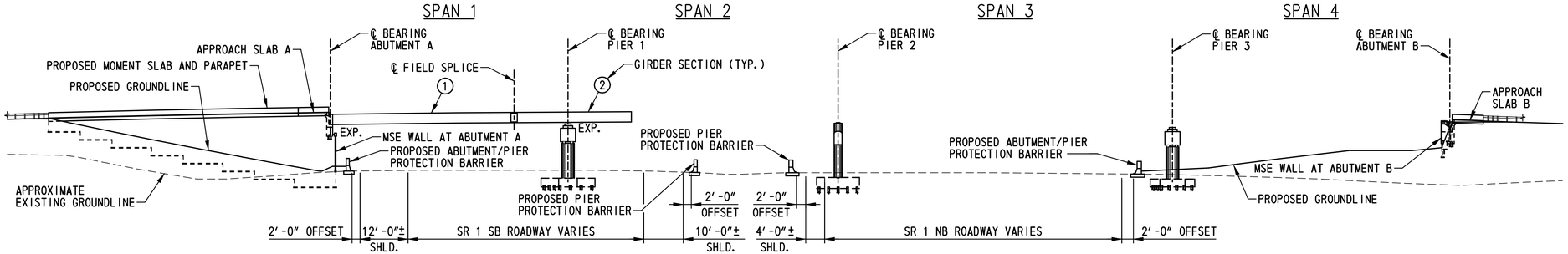

ELEVATION - ERECTION STAGE 1

SCALE: 1"=40'-0"

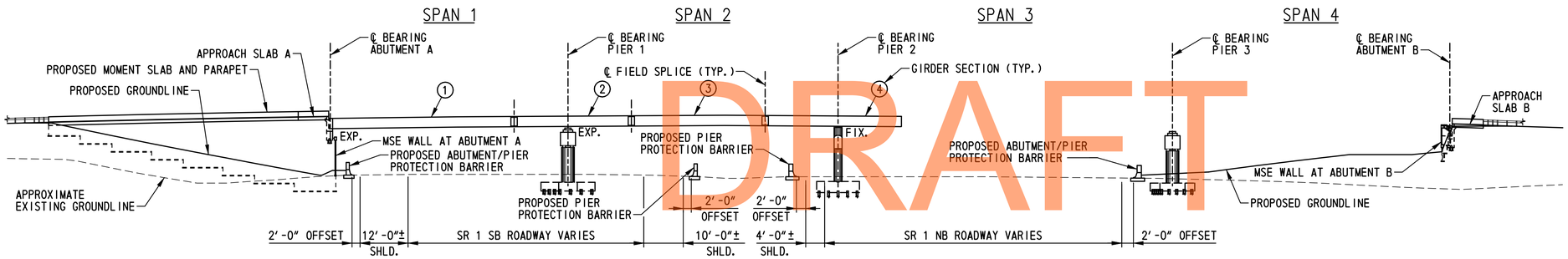

ELEVATION - ERECTION STAGE 2

SCALE: 1"=40'-0"

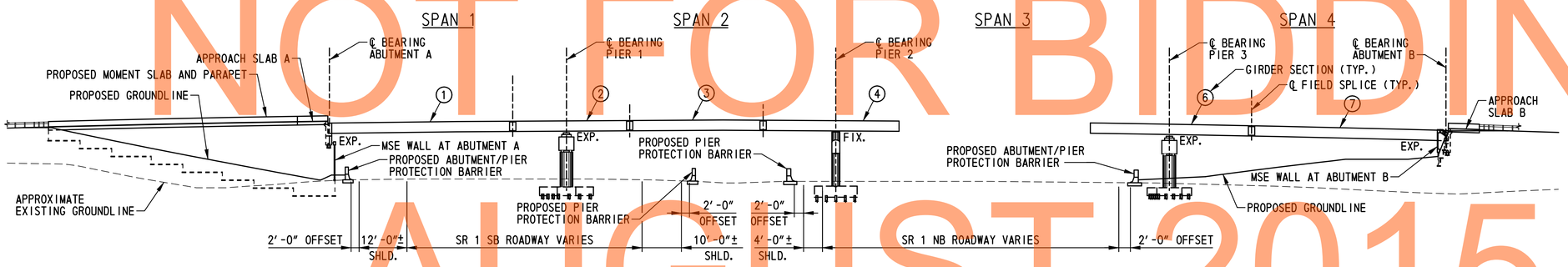

ELEVATION - ERECTION STAGE 3

SCALE: 1"=40'-0"

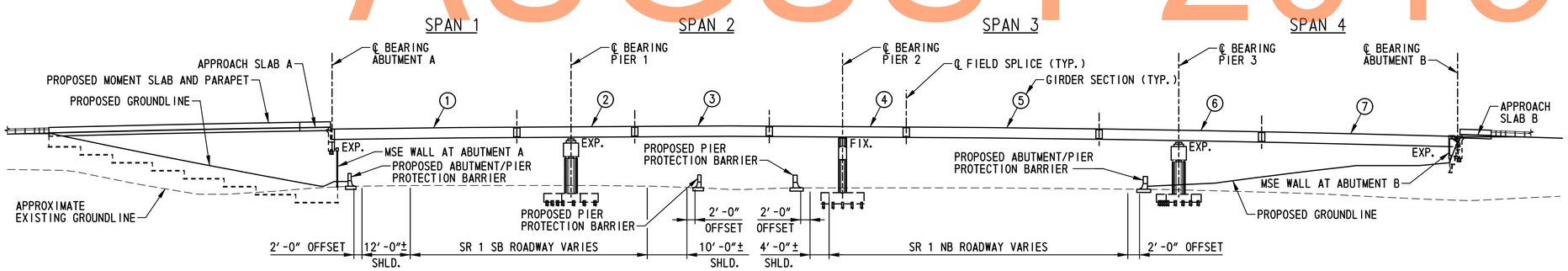

ELEVATION - ERECTION STAGE 4

SCALE: 1"=40'-0"

SUGGESTED ERECTION SEQUENCE NOTES:

STAGE 1:

1. LIFT GIRDER SECTION 1 INTO PLACE. GIRDER SECTION 1 TO BE SUPPORTED AT ONE END BY ABUTMENT A AND HELD BY A CRANE AT THE OTHER END.
2. LIFT GIRDER SECTION 2 INTO PLACE. GIRDER SECTION 2 TO BE SUPPORTED AT ONE END BY PIER 1 AND HELD BY A CRANE AT THE OTHER END.
3. MAKE FIELD SPLICE CONNECTION BETWEEN GIRDER SECTION 1 AND GIRDER SECTION 2.
4. TIE DOWN AND STABILIZE GIRDER SECTION 1 AND GIRDER SECTION 2 AS NECESSARY.
5. GIRDER SECTION 1 AND GIRDER SECTION 2 FOR THE FIRST GIRDER INSTALLED SHALL BE HELD BY A CRANE UNTIL THE CROSS FRAMES BETWEEN THE FIRST AND SECOND GIRDERS ARE INSTALLED.
6. REPEAT STEPS 1 THRU 3 FOR ALL GIRDERS, INSTALLING THE CROSS FRAMES AFTER SPLICING EACH REMAINING GIRDER.

STAGE 2:

1. LIFT GIRDER SECTION 3 INTO PLACE. GIRDER SECTION 3 TO BE HELD BY A CRANE.
2. MAKE FIELD SPLICE CONNECTION BETWEEN GIRDER SECTION 3 AND GIRDER SECTION 2.
3. LIFT GIRDER SECTION 4 INTO PLACE. GIRDER SECTION 4 TO BE SUPPORTED AT ONE END BY PIER 2 AND HELD BY A CRANE AT THE OTHER END.
4. MAKE FIELD SPLICE CONNECTION BETWEEN GIRDER SECTION 4 AND GIRDER SECTION 3.
5. TIE DOWN AND STABILIZE GIRDER SECTION 3 AND GIRDER SECTION 4 AS NECESSARY.
6. GIRDER SECTION 3 AND GIRDER SECTION 4 FOR THE FIRST GIRDER INSTALLED SHALL BE HELD BY A CRANE UNTIL THE CROSS FRAMES BETWEEN THE FIRST AND SECOND GIRDERS ARE INSTALLED.
7. REPEAT STEPS 1 THRU 4 FOR ALL GIRDERS, INSTALLING THE CROSS FRAMES AFTER SPLICING EACH REMAINING GIRDER.

STAGE 3:

1. LIFT GIRDER SECTION 7 INTO PLACE. GIRDER SECTION 7 TO BE SUPPORTED AT ONE END BY ABUTMENT B AND HELD BY A CRANE AT THE OTHER END.
2. LIFT GIRDER SECTION 6 INTO PLACE. GIRDER SECTION 6 TO BE SUPPORTED AT ONE END BY PIER 3 AND HELD BY A CRANE AT THE OTHER END.
3. MAKE FIELD SPLICE CONNECTION BETWEEN GIRDER SECTION 6 AND GIRDER SECTION 7.
4. TIE DOWN AND STABILIZE GIRDER SECTION 6 AND GIRDER SECTION 7 AS NECESSARY.
5. GIRDER SECTION 6 AND GIRDER SECTION 7 FOR THE FIRST GIRDER INSTALLED SHALL BE HELD BY A CRANE UNTIL THE CROSS FRAMES BETWEEN THE FIRST AND SECOND GIRDERS ARE INSTALLED.
6. REPEAT STEPS 1 THRU 3 FOR ALL GIRDERS, INSTALLING THE CROSS FRAMES AFTER SPLICING EACH REMAINING GIRDER.

STAGE 4:

1. LIFT GIRDER SECTION 5 INTO PLACE. GIRDER SECTION 5 TO BE HELD BY A CRANE.
2. MAKE FIELD SPLICE CONNECTION BETWEEN GIRDER SECTION 4 AND GIRDER SECTION 5.
3. MAKE FIELD SPLICE CONNECTION BETWEEN GIRDER SECTION 5 AND GIRDER SECTION 6.
4. TIE DOWN AND STABILIZE GIRDER SECTION 5 AS NECESSARY.
5. REPEAT STEPS 1 THRU 3 FOR ALL GIRDERS, INSTALLING THE CROSS FRAMES AFTER SPLICING EACH REMAINING GIRDER.

NOTE TO CONTRACTOR:

THE ERECTION SEQUENCE SHOWN IS ONLY A SUGGESTED METHOD. THE CONTRACTOR IS RESPONSIBLE FOR THE ENTIRE ERECTION OF THE BRIDGE. THE CONTRACTOR SHALL SUBMIT DRAWINGS SEALED BY A PROFESSIONAL ENGINEER REGISTERED IN THE STATE OF DELAWARE, ILLUSTRATING FULLY THE PROPOSED METHOD OF ERECTION. THE DRAWINGS SHALL SHOW DETAILS OF ALL TEMPORARY SHORING, FALSEWORK, BRACING, GUYS, DEAD-MEN, LIFTING DEVICES, HOLD-DOWN DEVICES AND ATTACHMENTS TO THE BRIDGE MEMBERS. THE DRAWINGS SHALL ALSO INCLUDE THE SEQUENCE OF ERECTION, LOCATION OF CRANES, CRANE CAPACITIES, LOCATION OF LIFTING POINTS ON THE BRIDGE MEMBER AND WEIGHT OF MEMBERS. THE PLAN AND DRAWING SHALL BE COMPLETE IN DETAIL FOR ALL ANTICIPATED STAGES AND CONDITIONS DURING ERECTION. CALCULATIONS SEALED BY A PROFESSIONAL ENGINEER REGISTERED IN THE STATE OF DELAWARE ARE REQUIRED TO DEMONSTRATE THAT ALLOWABLE STRESSES ARE NOT EXCEEDED AND THAT MEMBER CAPACITIES AND FINAL GEOMETRY WILL BE CORRECT. AT NO TIME SHALL ACTIVE TRAFFIC ON SR 1 NB OR SB BE LOCATED UNDER GIRDERS BEING HELD OR LIFTED BY CRANES DURING THE ERECTION SEQUENCE. MAINTENANCE OF TRAFFIC REQUIREMENTS DURING GIRDER ERECTION TO BE REFERENCED IN FUTURE SUBMISSIONS.

DRAFT
NOT FOR BIDDING
AUGUST 2015

BR1-3
BM-01

N:\31653-000\Contract 1B\CADD\Bridge\Br_No433\BM01_br1-433.dgn
2/5/2013 10:32:09 AM

DELAWARE DEPARTMENT OF TRANSPORTATION	ADDENDUMS / REVISIONS	SCALE: AS SHOWN	US 301 & SR 1 INTERCHANGE	CONTRACT T200911302	BRIDGE NO. 1-433	GIRDER ERECTION SEQUENCE
				COUNTY NEW CASTLE	DESIGNED BY: B.K.B.	SHEET NO. 262
					CHECKED BY: S.E.K.	TOTAL SHTS. 491

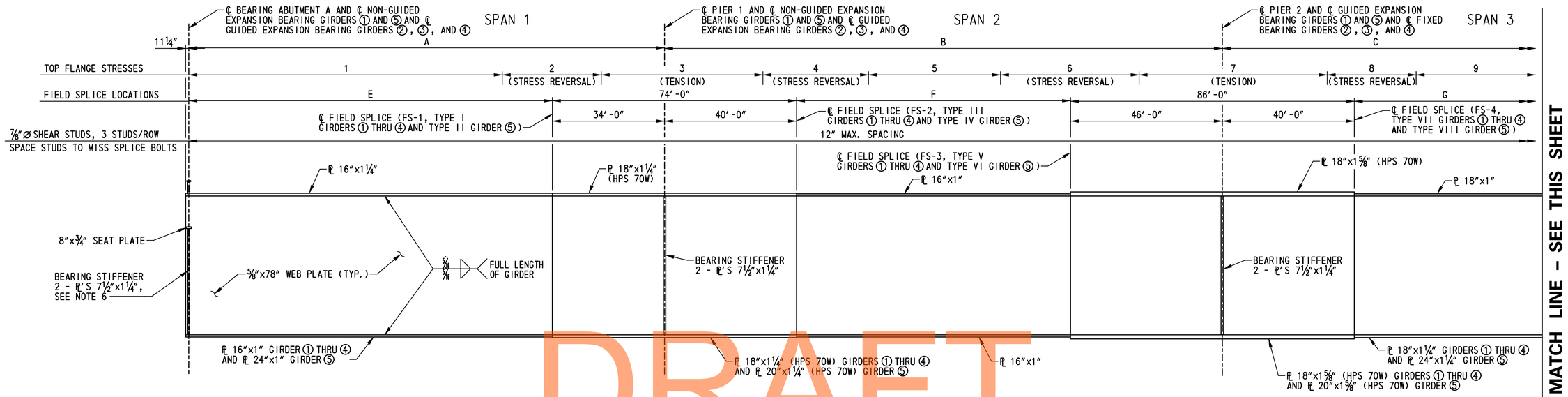

GIRDER ELEVATION

SCALE: NOT TO SCALE

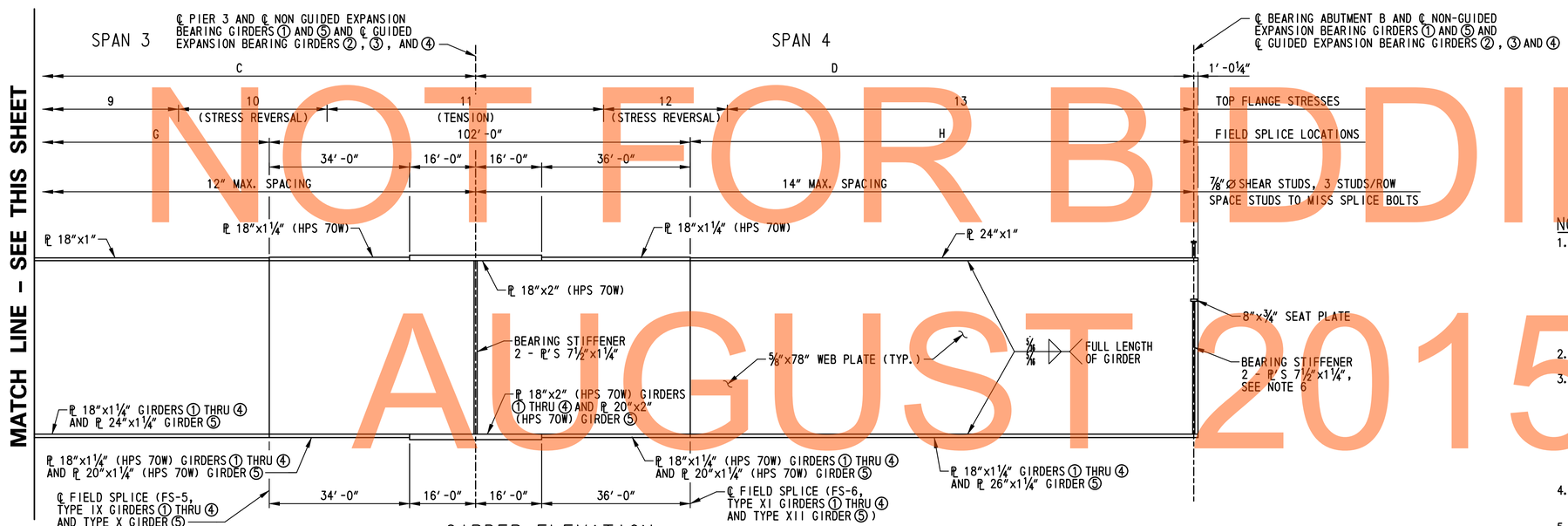

GIRDER ELEVATION

SCALE: NOT TO SCALE

DRAFT
NOT FOR BIDDING
AUGUST 2015

NOTES:

1. THE ENTIRE STRUCTURAL STEEL SUPERSTRUCTURE SHALL BE PREASSEMBLED IN THE FABRICATION SHOP WITH THE SPECIFIED BOLT DIAMETERS REQUIRED FOR CONSTRUCTION. AFTER THE STRUCTURAL STEEL SUPERSTRUCTURE HAS BEEN PREASSEMBLED PRIOR TO DISASSEMBLING, DELDOT OR THEIR AUTHORIZED REPRESENTIVES SHALL APPROVE THE PREASSEMBLED STRUCTURAL STEEL. NO STRUCTURAL STEEL SHALL BE DELIVERED TO THE PROJECT SITE UNTIL DELDOT OR THEIR AUTHORIZED REPRESENTIVES HAVE PROVIDED APPROVAL TO THE CONTRACTOR IN WRITING.
2. THE GIRDERS ARE REQUIRED TO BE PLUMB UNDER FULL DEAD LOAD.
3. ALL STRUCTURAL STEEL SHALL BE AASHTO M 270 (ASTM A 709), GRADE 50W EXCEPT AS SHOWN FOR THE TOP AND BOTTOM FLANGES BETWEEN FIELD SPLICES. THE STRUCTURAL STEEL IN THESE REGIONS SHALL BE AASHTO M 270 (ASTM A 709), GRADE HPS 70W. PAYMENT FOR AASHTO M 270 (ASTM A 709), GRADE 50W STRUCTURAL STEEL WILL BE MADE UNDER ITEM NO. 605001 - STEEL STRUCTURES. PAYMENT FOR AASHTO M 270 (ASTM A 709), GRADE HPS 70W STRUCTURAL STEEL WILL BE MADE UNDER ITEM NO. 605691 - HIGH PERFORMANCE STEEL.
4. THERE SHALL BE NO FIELD WELDING TO THE TOP FLANGE, EXCEPT FOR SHEAR STUDS, IN THE TENSION AND STRESS REVERSAL REGIONS.
5. CROSS FRAME CONNECTION PLATE SPACING NOT SHOWN. FOR LOCATION OF CROSS FRAME CONNECTION PLATES, SEE DWG. NO. FR-01.
6. EXTEND EXTERIOR BEARING STIFFENER OF FASCIA GIRDERS AT ABUTMENTS TO TOP FLANGE AND WELD.
7. FOR BEARING STIFFENER AND CONNECTION PLATE DETAILS, SEE DWG. NO. BM-03.
8. FOR SHOP FLANGE SPLICE DETAILS, SEE DWG. NO. BM-08.
9. FOR FIELD SPLICE DETAILS, SEE DWG. NOS. BM-05 THRU BM-08.
10. FOR SHEAR STUD DETAILS, SEE DWG. NO. SD-01.

GIRDER ELEVATION SCHEDULE

GIRDER	A	B	C	D	E	F	G	H	1	2	3	4	5	6	7	8	9	10	11	12	13	RADIUS
①	144′-2⅛"	169′-0½"	203′-10⅛"	174′-0⅛"	110′-2⅛"	83′-0½"	113′-10⅛"	122′-0⅛"	91′-0⅜"	30′-5⅜"	48′-6½"	38′-1¾"	23′-7⅝"	52′-3¼"	56′-8¾"	29′-10½"	77′-11"	34′-4½"	66′-0⅛"	33′-10¼"	108′-2¾"	1819.67
②	144′-11⅜"	169′-11¼"	204′-11⅛"	174′-11¼"	110′-11⅜"	83′-11¼"	114′-11⅛"	122′-11¼"	95′-4¾"	26′-8"	49′-4¾"	32′-1⅜"	36′-11⅞"	44′-0"	58′-5½"	25′-11½"	86′-8⅞"	28′-11¼"	68′-0⅝"	29′-3¼"	112′-9⅛"	1829.33
③	145′-8½"	170′-10"	206′-0⅛"	175′-10⅜"	111′-8½"	84′-10"	116′-0⅛"	123′-10⅜"	97′-6⅜"	24′-4⅞"	51′-0¾"	29′-9"	41′-1¼"	41′-5¾"	60′-1⅝"	23′-11⅝"	90′-5⅛"	26′-4½"	70′-0⅝"	27′-2¾"	114′-10⅝"	1839.00
④	146′-5¾"	171′-8¾"	207′-1⅛"	176′-9⅜"	112′-5¾"	85′-8¾"	117′-1⅛"	124′-9⅜"	95′-11⅛"	27′-6⅝"	50′-0⅝"	35′-3⅞"	27′-11⅝"	50′-7½"	59′-0⅛"	26′-9½"	85′-4⅜"	30′-8⅞"	69′-1⅛"	30′-11"	112′-8⅞"	1848.67
⑤	147′-3"	172′-7⅝"	208′-2⅛"	177′-8½"	113′-3"	86′-7⅝"	118′-2⅛"	125′-8½"	92′-4⅜"	33′-6⅞"	48′-2⅝"	0"	115′-5½"	0"	57′-3⅞"	31′-7⅞"	77′-3⅛"	36′-10½"	67′-5¾"	36′-2⅜"	109′-4¼"	1858.33

BR1-3
BM-02

DELAWARE DEPARTMENT OF TRANSPORTATION

ADDENDUMS / REVISIONS

SCALE: AS SHOWN

US 301 & SR 1 INTERCHANGE

CONTRACT	BRIDGE NO.	1-433
T200911302	DESIGNED BY: W.T.R.	
COUNTY		
NEW CASTLE	CHECKED BY: B.K.B.	

GIRDER ELEVATION

SHEET NO. 263
TOTAL SHTS. 491

N:\31653-000\Contract 1B\CADD\Bridge\Br_No433\BM02_br1-433.dgn
2/5/2015 10:26:31 AM

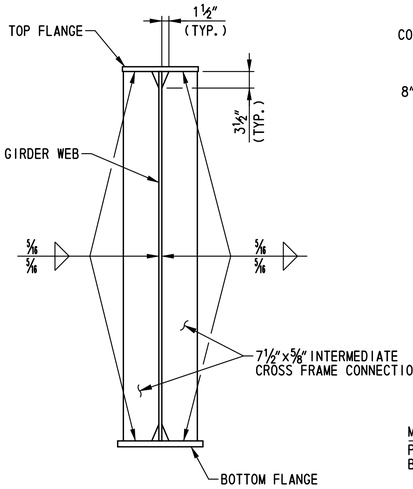

INTERMEDIATE CROSS FRAME CONNECTION PLATES
SCALE: ¾"=1'-0"

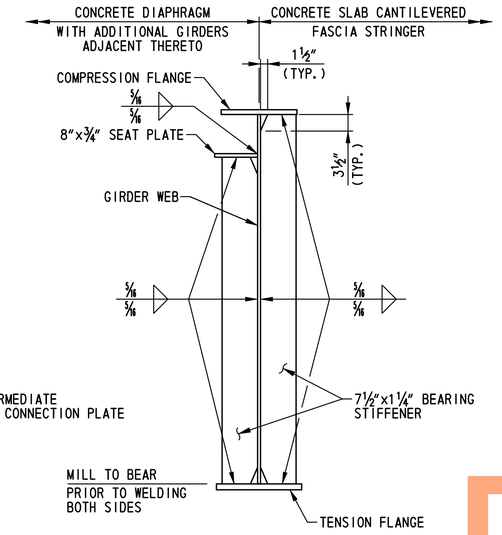

ABUTMENT BEARING STIFFENERS
SCALE: ¾"=1'-0"

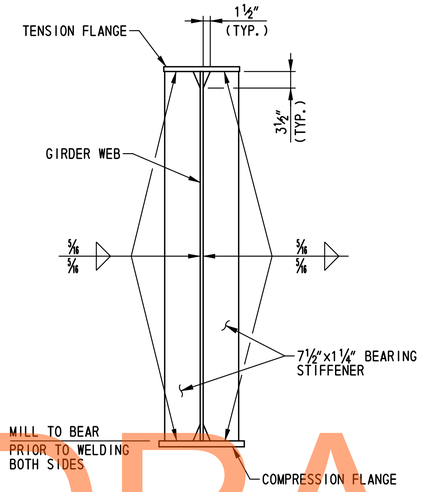

PIER BEARING STIFFENERS
SCALE: ¾"=1'-0"

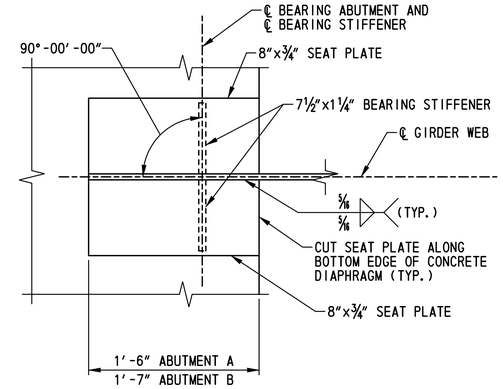

SEAT PLATE DETAIL
SCALE: 1½"=1'-0"

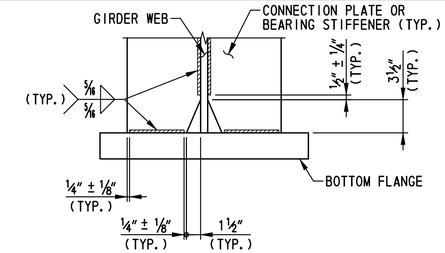

WELD TERMINATION DETAIL
SCALE: 1½"=1'-0"

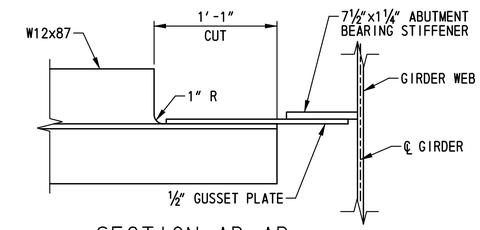

SECTION AD-AD
SCALE: 1½"=1'-0"

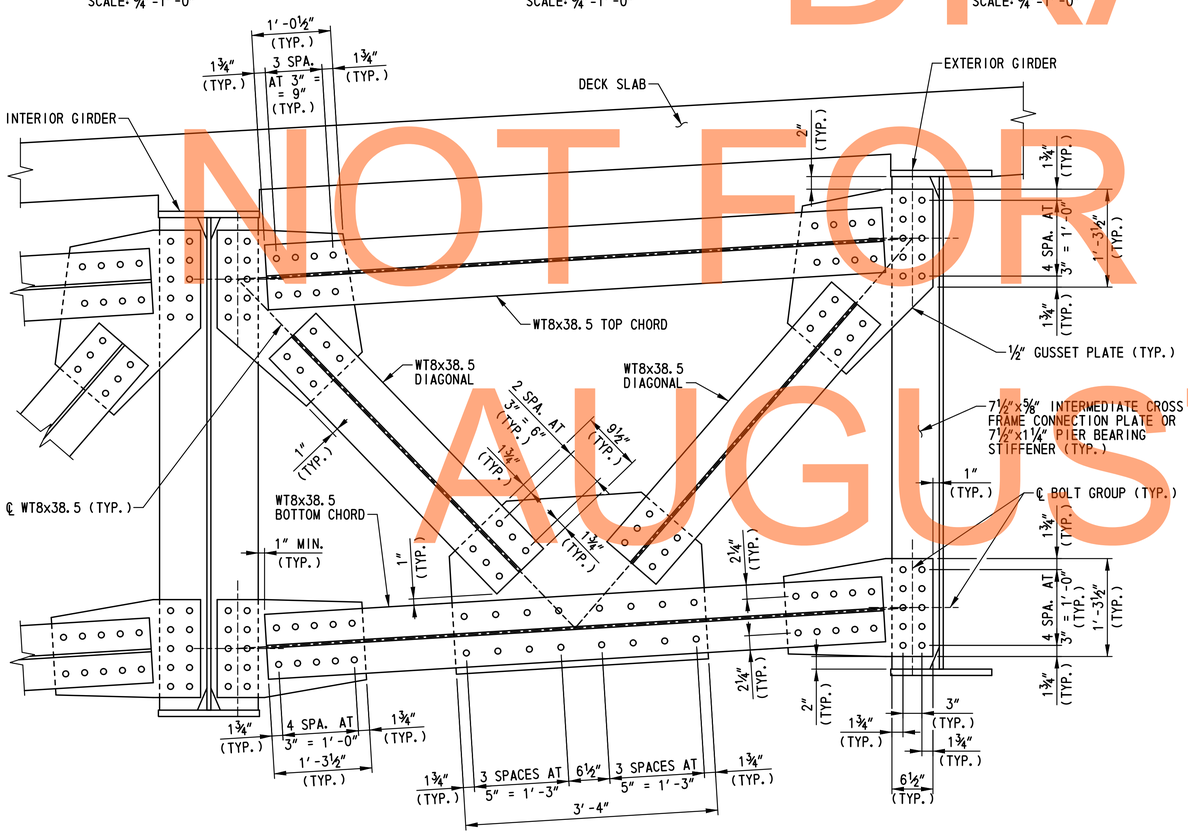

PIER AND INTERMEDIATE CROSS FRAME DETAIL
SCALE: 1"=1'-0"

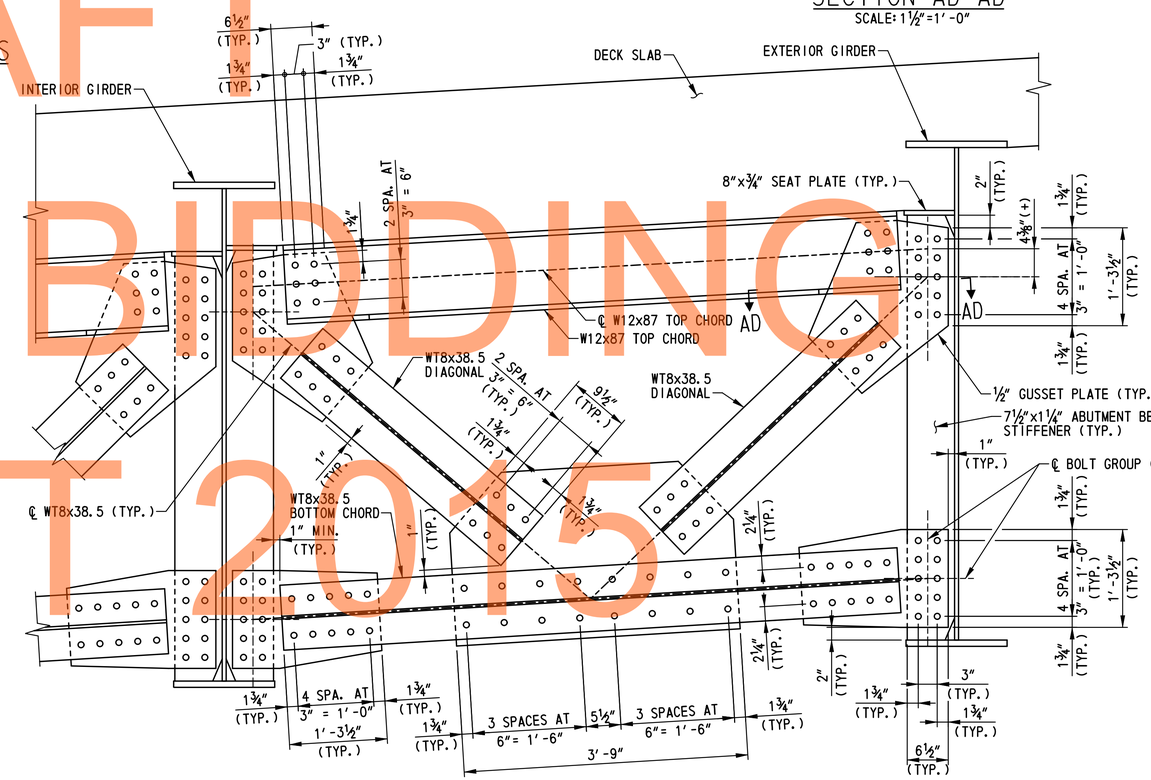

ABUTMENT CROSS FRAME DETAIL
SCALE: 1"=1'-0"

NOTES:

1. FOR CROSS FRAME LOCATIONS, SEE DWG. NO. FR-01.
2. CROSS FRAME CONNECTIONS DESIGNED AS A SLIP CRITICAL CONNECTION WITH CLASS A SURFACE CONDITIONS.
3. ALL BOLTS TO BE ⅞"Ø HIGH STRENGTH BOLTS CONFORMING TO A 490, TYPE 3. ALL BOLT HOLES SHALL BE 15/16"Ø . ALL BOLTS SHALL BE FABRICATED WITH THREADS THAT ARE EXCLUDED FROM THE SHEAR PLANE.
4. THE MINIMUM ACCEPTABLE EDGE DISTANCE FOR ANY HOLE SHALL BE 1½".
5. BOLTS NOT SHOWN IN CROSS FRAMES.
6. THE GIRDERS ARE REQUIRED TO BE PLUMB UNDER FULL DEAD LOAD.

DRAFT
NOT FOR BIDDING
AUGUST 2015

BR1-3
BM-03

DELAWARE DEPARTMENT OF TRANSPORTATION

ADDENDUMS / REVISIONS

SCALE: AS SHOWN

US 301 & SR 1 INTERCHANGE

CONTRACT	BRIDGE NO.	1-433
T200911302	DESIGNED BY: W.T.R.	
COUNTY		
NEW CASTLE	CHECKED BY: B.K.B.	

STRUCTURAL STEEL DETAILS - 1

SHEET NO. 264
TOTAL SHTS. 491

N:\31653-000\Contract_IB\CADD\Bridge\Br_No433\BM03_br1-433.dgn
2/5/2013 10:26:57 AM

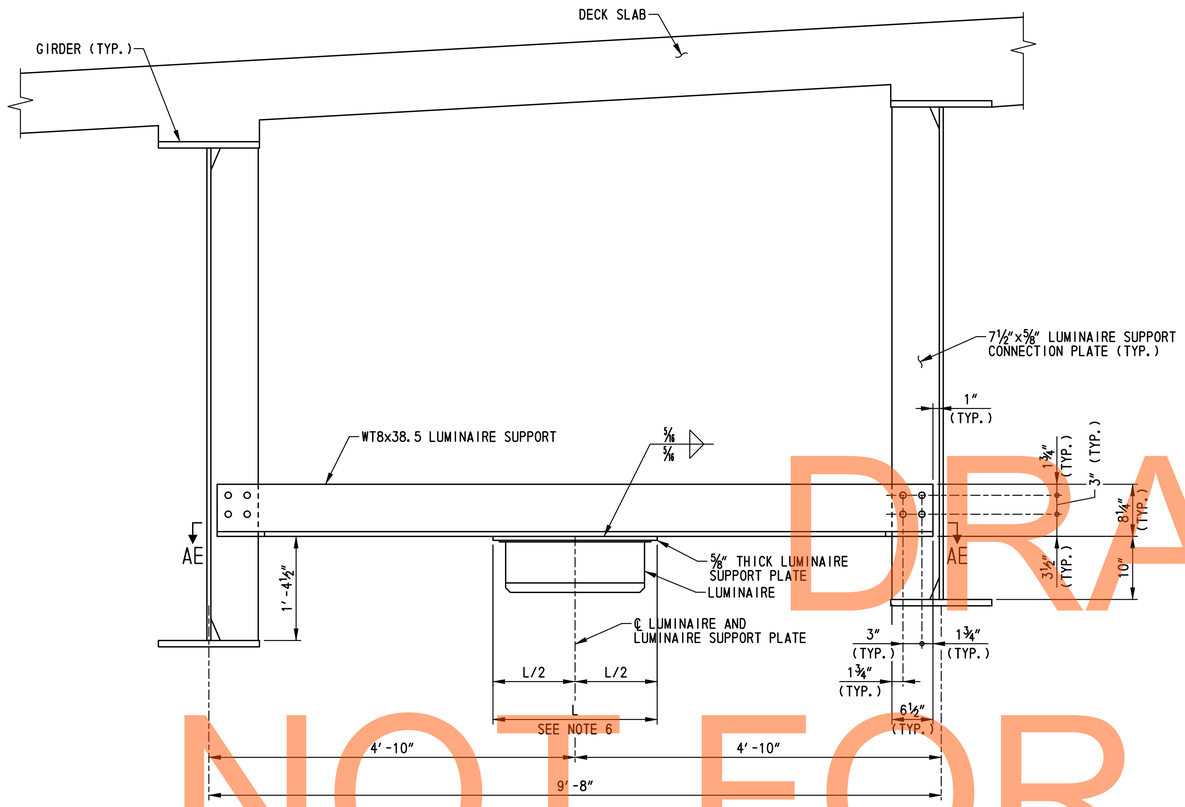

LUMINAIRE SUPPORT DETAIL
SCALE: 1"=1'-0"

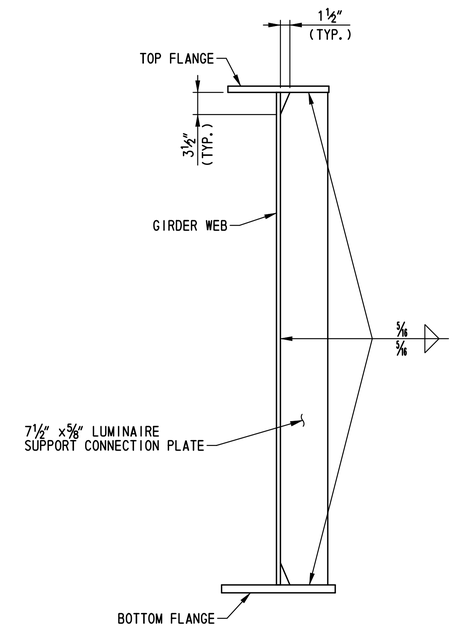

LUMINAIRE SUPPORT CONNECTION PLATE
SCALE: 1"=1'-0"

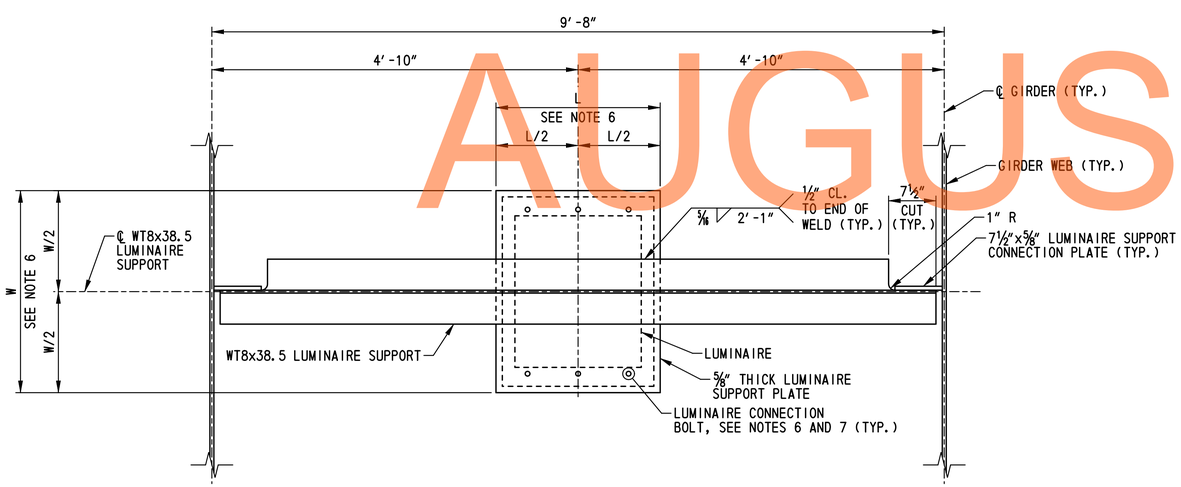

SECTION AE-AE
SCALE: 1"=1'-0"

NOTES:

1. FOR LUMINAIRE SUPPORT LOCATIONS, SEE DWG. NO. FR-01.
2. ALL BOLTS TO BE ⅞"Ø HIGH STRENGTH BOLTS CONFORMING TO A 490, TYPE 3. ALL BOLT HOLES SHALL BE 15/16" Ø. ALL BOLTS SHALL BE FABRICATED WITH THREADS THAT ARE EXCLUDED FROM THE SHEAR PLANE.
3. THE MINIMUM ACCEPTABLE EDGE DISTANCE FOR ANY HOLE SHALL BE 1½".
4. BOLTS NOT SHOWN IN LUMINAIRE SUPPORT CONNECTION PLATE.
5. FOR CONNECTION PLATE WELD TERMINATION DETAIL, SEE DWG. NO. BM-03.
6. FOR ADDITIONAL INFORMATION ON SUPPORT PLATE LUMINAIRE, ASSOCIATED ELECTRICAL CONDUIT AND INSTALLATION, SEE DWG. NOS. LI-13 AND LI-14.
7. LUMINAIRE CONNECTION TO LUMINAIRE SUPPORT PLATE SHALL BE A BOLTED CONNECTION IN CONFORMANCE WITH THE MANUFACTURER'S RECOMMENDATIONS.
8. LUMINAIRE BOLTED CONNECTION NOT SHOWN.

DRAFT
NOT FOR BIDDING
AUGUST 2015

BR1-3
BM-04

DELAWARE DEPARTMENT OF TRANSPORTATION	ADDENDUMS / REVISIONS	SCALE: AS SHOWN	US 301 & SR 1 INTERCHANGE	CONTRACT T200911302	BRIDGE NO. 1-433	STRUCTURAL STEEL DETAILS – 2	SHEET NO. 265
				COUNTY NEW CASTLE	DESIGNED BY: W.T.R.		TOTAL SHTS. 491
					CHECKED BY: B.K.B.		

N:\31653-000\Contract 1B\CADD\Bridge\Br_No433\BM04_br1-433.dgn
2/5/2013 10:27:22 AM

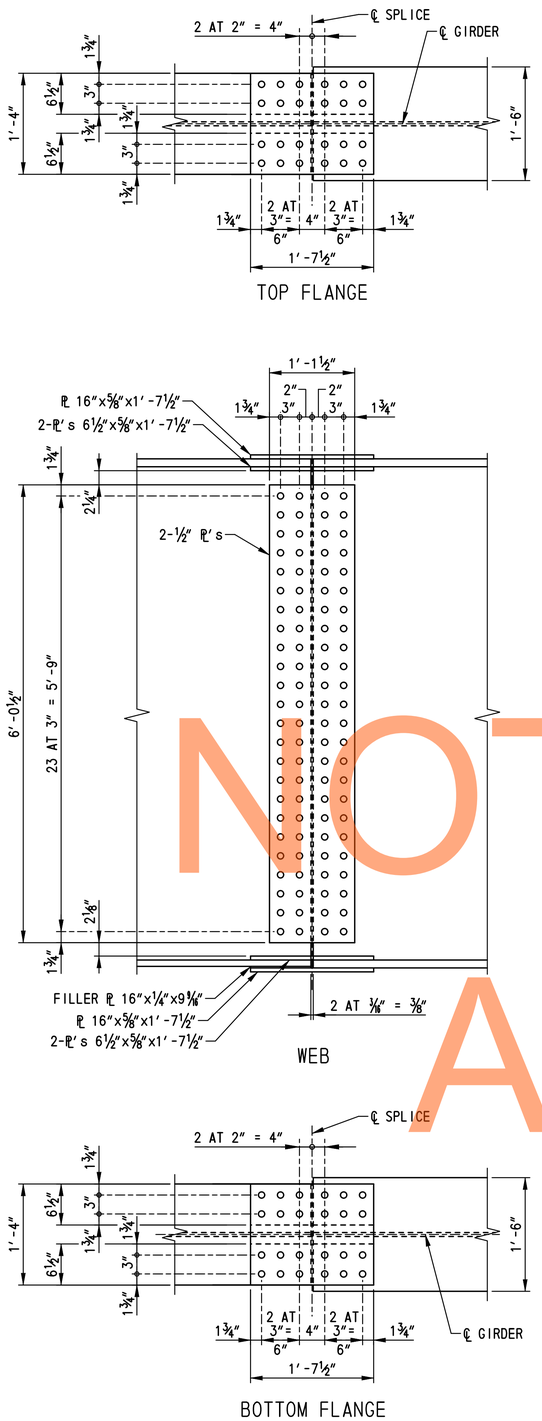

FIELD SPLICE DETAIL - TYPE I

SCALE: 1"=1'-0"

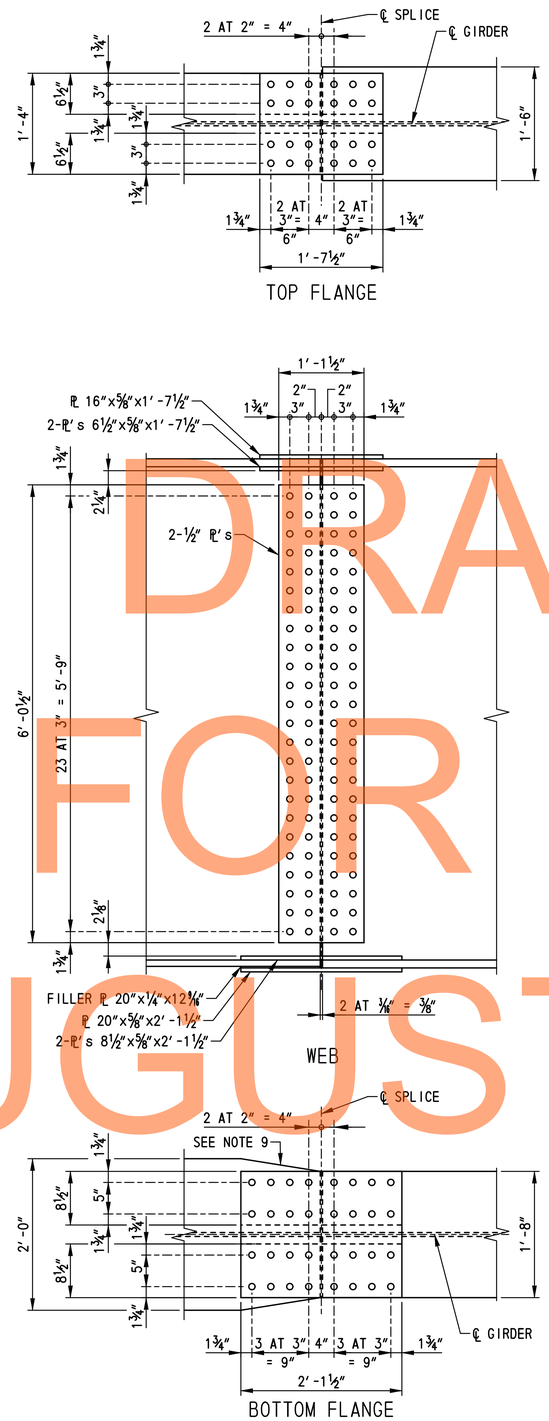

FIELD SPLICE DETAIL - TYPE II

SCALE: 1"=1'-0"

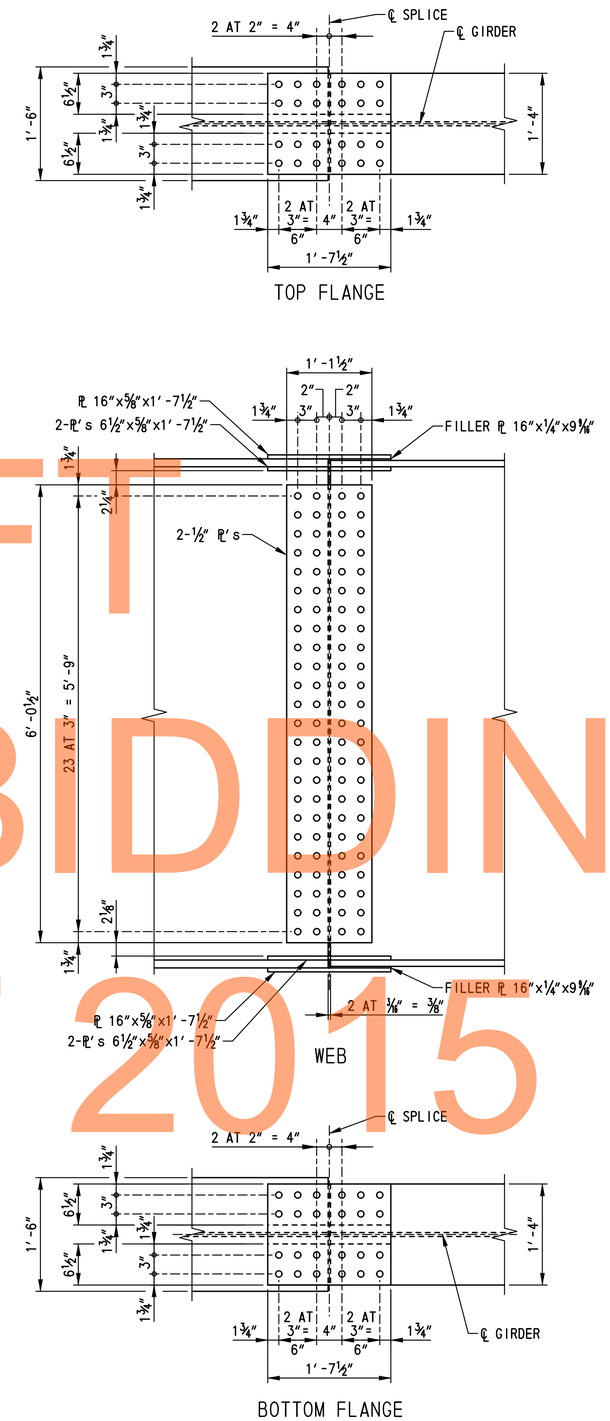

FIELD SPLICE DETAIL - TYPE III

SCALE: 1"=1'-0"

FIELD SPLICE LOCATION BY TYPE		
TYPE	LOCATION	
	GIRDER	SPLICE DESIGNATION
I	1 THRU 4	FS-1
II	5	FS-1
III	1 THRU 4	FS-2

SPLICE NOTES:

1. FOR LOCATIONS OF FIELD SPLICES, SEE DWG. NOS. BM-02 AND FR-01.
2. FIELD SPLICES DESIGNED AS A SLIP CRITICAL CONNECTION WITH CLASS A SURFACE CONDITIONS.
3. ALL BOLTS TO BE ⅞" ø HIGH STRENGTH BOLTS CONFORMING TO A 490, TYPE 3. ALL BOLT HOLES SHALL BE 15/16" ø. ALL BOLTS SHALL BE FABRICATED WITH THREADS THAT ARE EXCLUDED FROM THE SHEAR PLANE.
4. THE MINIMUM ACCEPTABLE EDGE DISTANCE FOR ANY HOLE SHALL BE 1½".
5. BOLT HEADS SHALL BE ON THE EXTERIOR FACE OF THE EXTERIOR GIRDERS AND THE BOTTOM OF THE BOTTOM FLANGES.
6. BOLTS NOT SHOWN IN SPLICE.
7. SPACE SHEAR STUDS TO MISS TOP FLANGE SPLICE BOLTS.
8. ON EACH SIDE OF THE ℄ SPLICE A MINIMUM OF 50 PERCENT OF THE WEB, TOP FLANGE, AND BOTTOM FLANGE SPLICE BOLTS SHALL BE IN PLACE BEFORE THE GIRDER IS LEFT UNSUPPORTED.
9. WHEN FLANGE IS LARGER THAN ADJACENT FLANGE BY MORE THAN 2", THE LARGER FLANGE SHALL BE TAPERED TO SMALLER FLANGE WIDTH IN A DISTANCE OF ½ LENGTH OF SPLICE PLATE (BOTTOM FLANGE ONLY).
10. FIELD SPLICES SHALL BE COMPLETELY SHOP ASSEMBLED AND MATCH MARKED AFTER ALL SHOP WELDING HAS BEEN COMPLETED. CONTACT SURFACES SHALL BE FREE OF ALL OIL AND DIRT.

DRAFT
NOT FOR BIDDING
AUGUST 2015

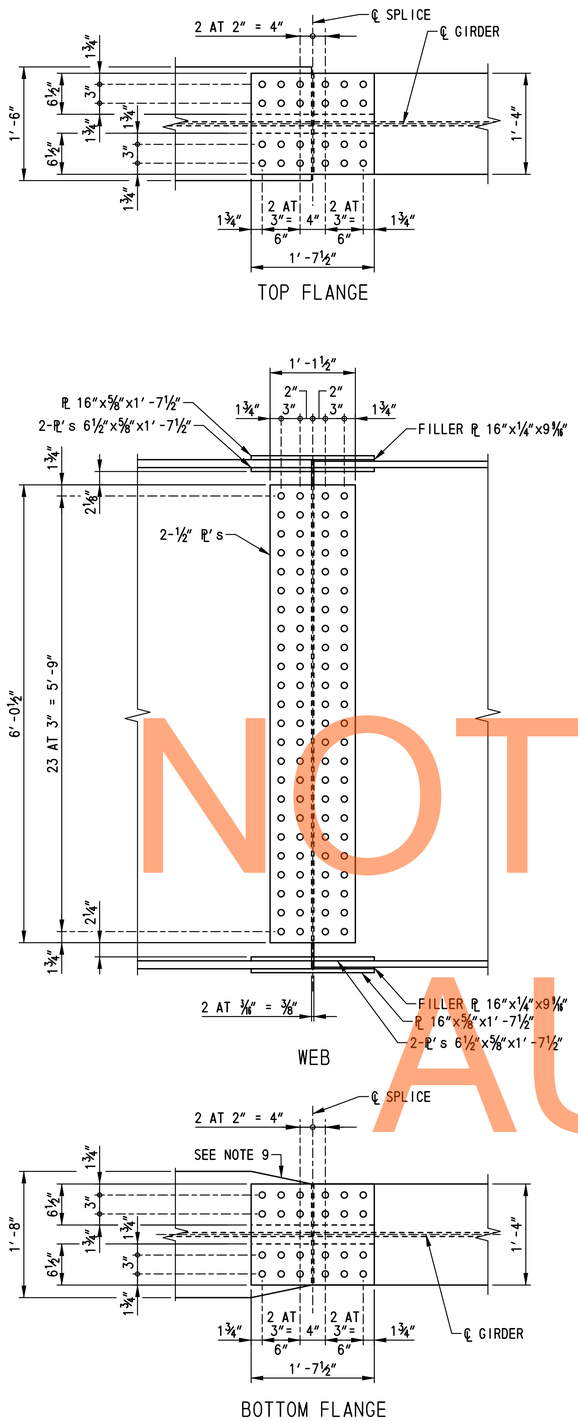

FIELD SPLICE DETAIL - TYPE IV

SCALE: 1"=1'-0"

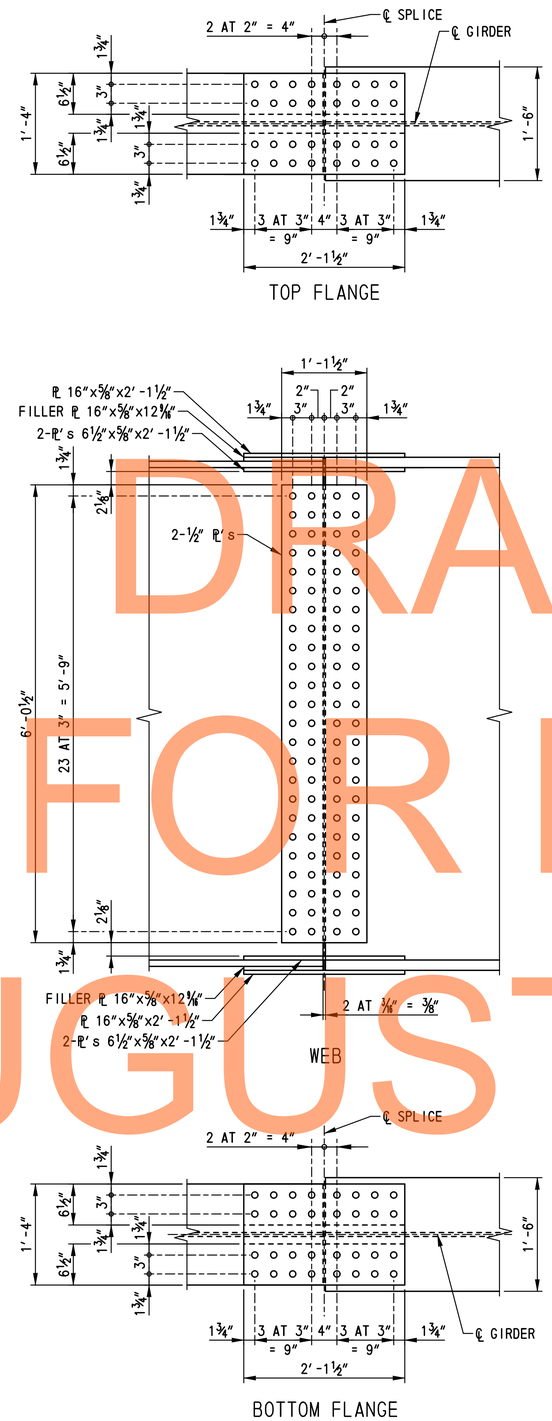

FIELD SPLICE DETAIL - TYPE V

SCALE: 1"=1'-0"

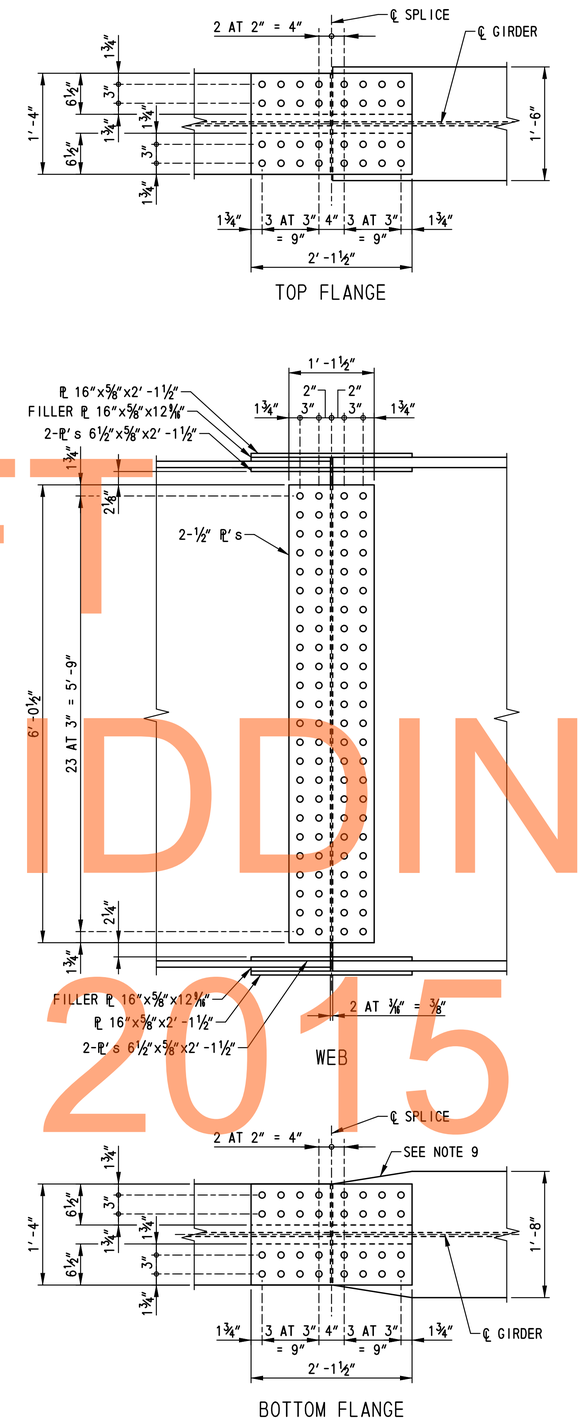

FIELD SPLICE DETAIL - TYPE VI

SCALE: 1"=1'-0"

FIELD SPLICE LOCATION BY TYPE		
TYPE	LOCATION	
	GIRDER	SPLICE DESIGNATION
IV	5	FS-2
V	1 THRU 4	FS-3
VI	5	FS-3

SPLICE NOTES:

1. FOR LOCATIONS OF FIELD SPLICES, SEE DWG. NOS. BM-02 AND FR-01.
2. FIELD SPLICES DESIGNED AS A SLIP CRITICAL CONNECTION WITH CLASS A SURFACE CONDITIONS.
3. ALL BOLTS TO BE ⅞" ∅ HIGH STRENGTH BOLTS CONFORMING TO A 490, TYPE 3. ALL BOLT HOLES SHALL BE 15/16" ∅. ALL BOLTS SHALL BE FABRICATED WITH THREADS THAT ARE EXCLUDED FROM THE SHEAR PLANE.
4. THE MINIMUM ACCEPTABLE EDGE DISTANCE FOR ANY HOLE SHALL BE 1½".
5. BOLT HEADS SHALL BE ON THE EXTERIOR FACE OF THE EXTERIOR GIRDERS AND THE BOTTOM OF THE BOTTOM FLANGES.
6. BOLTS NOT SHOWN IN SPLICE.
7. SPACE SHEAR STUDS TO MISS TOP FLANGE SPLICE BOLTS.
8. ON EACH SIDE OF THE ℄ SPLICE A MINIMUM OF 50 PERCENT OF THE WEB, TOP FLANGE, AND BOTTOM FLANGE SPLICE BOLTS SHALL BE IN PLACE BEFORE THE GIRDER IS LEFT UNSUPPORTED.
9. WHEN FLANGE IS LARGER THAN ADJACENT FLANGE BY MORE THAN 2", THE LARGER FLANGE SHALL BE TAPERED TO SMALLER FLANGE WIDTH IN A DISTANCE OF ½ LENGTH OF SPLICE PLATE (BOTTOM FLANGE ONLY).
10. FIELD SPLICES SHALL BE COMPLETELY SHOP ASSEMBLED AND MATCH MARKED AFTER ALL SHOP WELDING HAS BEEN COMPLETED. CONTACT SURFACES SHALL BE FREE OF ALL OIL AND DIRT.

DRAFT
NOT FOR BIDDING
AUGUST 2015

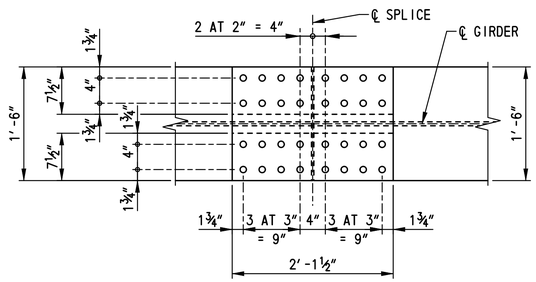

TOP FLANGE

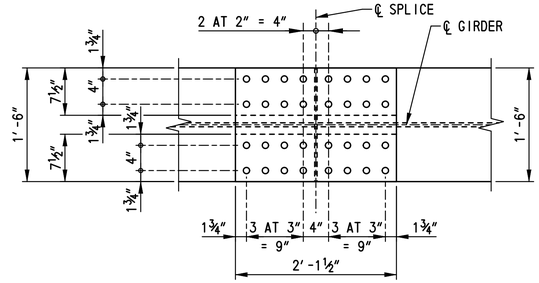

TOP FLANGE

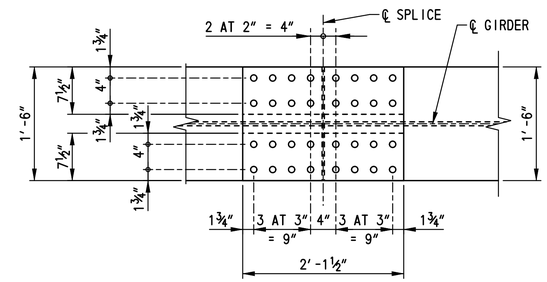

TOP FLANGE

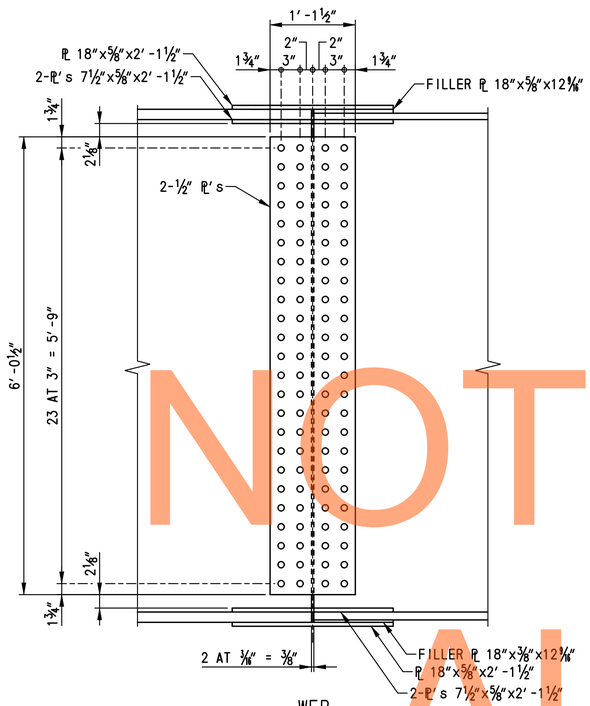

WEB

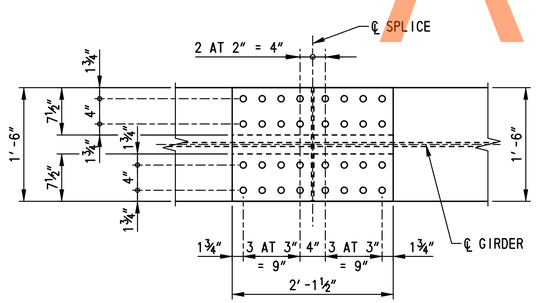

BOTTOM FLANGE

FIELD SPLICE DETAIL - TYPE VII

SCALE: 1"=1'-0"

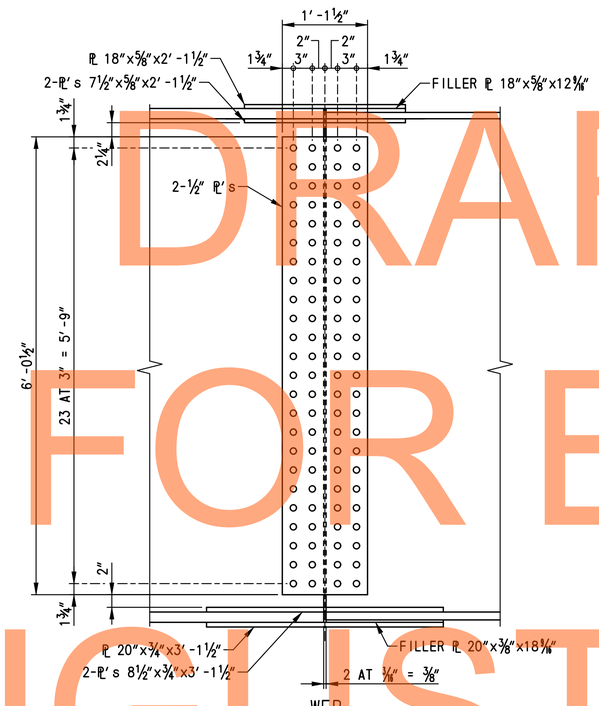

WEB

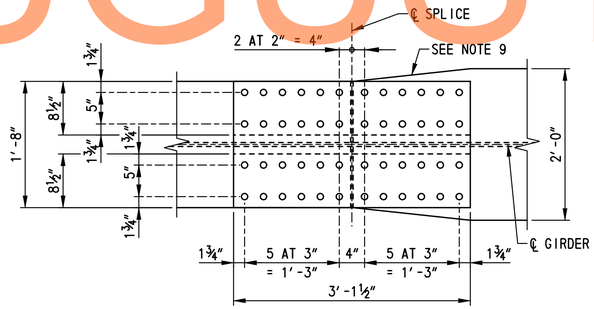

BOTTOM FLANGE

FIELD SPLICE DETAIL - TYPE VIII

SCALE: 1"=1'-0"

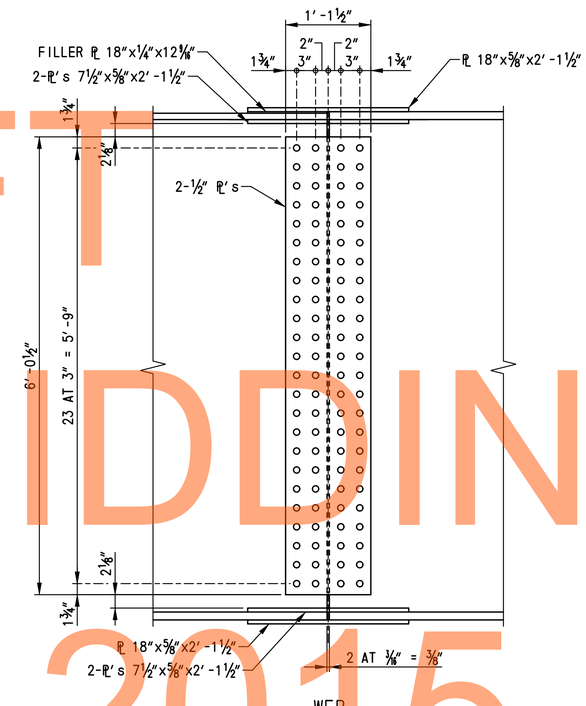

WEB

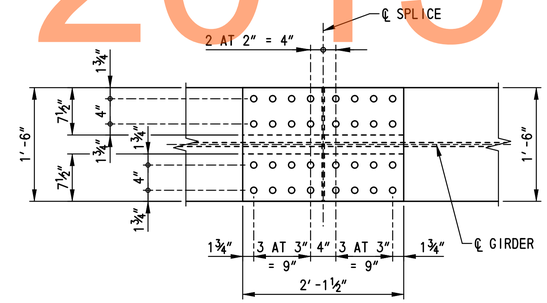

BOTTOM FLANGE

FIELD SPLICE DETAIL - TYPE IX

SCALE: 1"=1'-0"

FIELD SPLICE LOCATION BY TYPE		
TYPE	LOCATION	
	GIRDER	SPLICE DESIGNATION
VII	1 THRU 4	FS-4
VIII	5	FS-4
IX	1 THRU 4	FS-5

SPLICE NOTES:

1. FOR LOCATIONS OF FIELD SPLICES, SEE DWG. NOS. BM-02 AND FR-01.
2. FIELD SPLICES DESIGNED AS A SLIP CRITICAL CONNECTION WITH CLASS A SURFACE CONDITIONS.
3. ALL BOLTS TO BE ⅞" ø HIGH STRENGTH BOLTS CONFORMING TO A 490, TYPE 3. ALL BOLT HOLES SHALL BE 15/16" ø. ALL BOLTS SHALL BE FABRICATED WITH THREADS THAT ARE EXCLUDED FROM THE SHEAR PLANE.
4. THE MINIMUM ACCEPTABLE EDGE DISTANCE FOR ANY HOLE SHALL BE 1½".
5. BOLT HEADS SHALL BE ON THE EXTERIOR FACE OF THE EXTERIOR GIRDERS AND THE BOTTOM OF THE BOTTOM FLANGES.
6. BOLTS NOT SHOWN IN SPLICE.
7. SPACE SHEAR STUDS TO MISS TOP FLANGE SPLICE BOLTS.
8. ON EACH SIDE OF THE ℄ SPLICE A MINIMUM OF 50 PERCENT OF THE WEB, TOP FLANGE, AND BOTTOM FLANGE SPLICE BOLTS SHALL BE IN PLACE BEFORE THE GIRDER IS LEFT UNSUPPORTED.
9. WHEN FLANGE IS LARGER THAN ADJACENT FLANGE BY MORE THAN 2", THE LARGER FLANGE SHALL BE TAPERED TO SMALLER FLANGE WIDTH IN A DISTANCE OF ½ LENGTH OF SPLICE PLATE (BOTTOM FLANGE ONLY).
10. FIELD SPLICES SHALL BE COMPLETELY SHOP ASSEMBLED AND MATCH MARKED AFTER ALL SHOP WELDING HAS BEEN COMPLETED. CONTACT SURFACES SHALL BE FREE OF ALL OIL AND DIRT.

DRAFT
NOT FOR BIDDING
AUGUST 2015

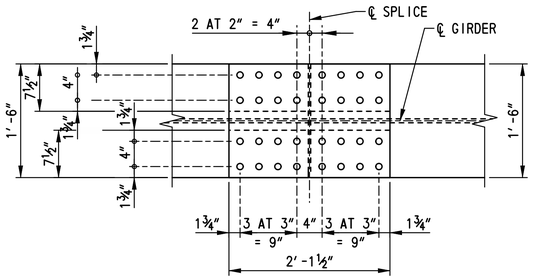

TOP FLANGE

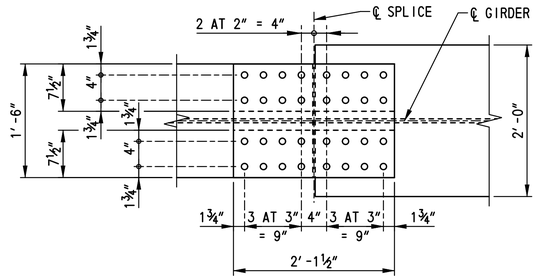

TOP FLANGE

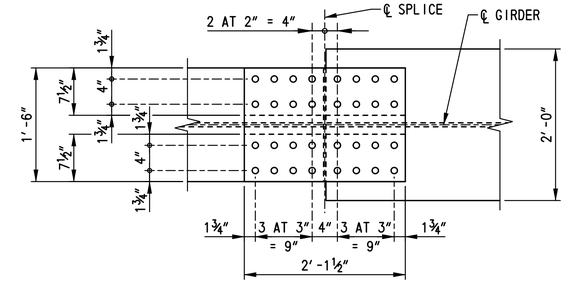

TOP FLANGE

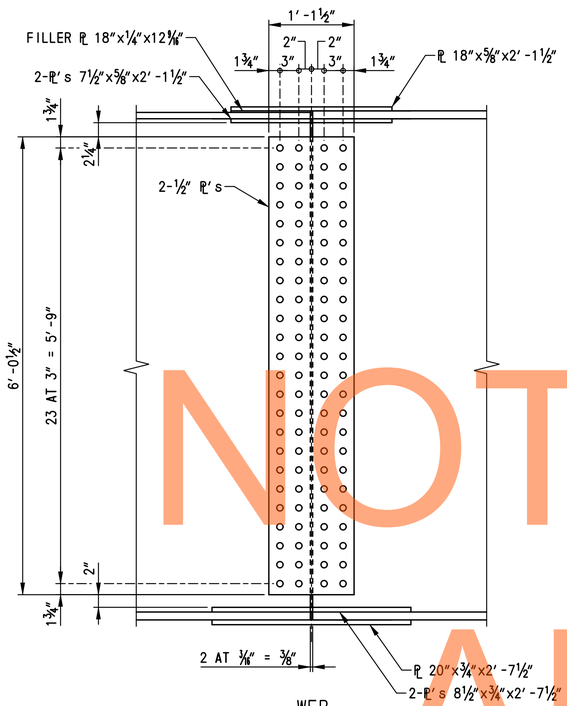

WEB

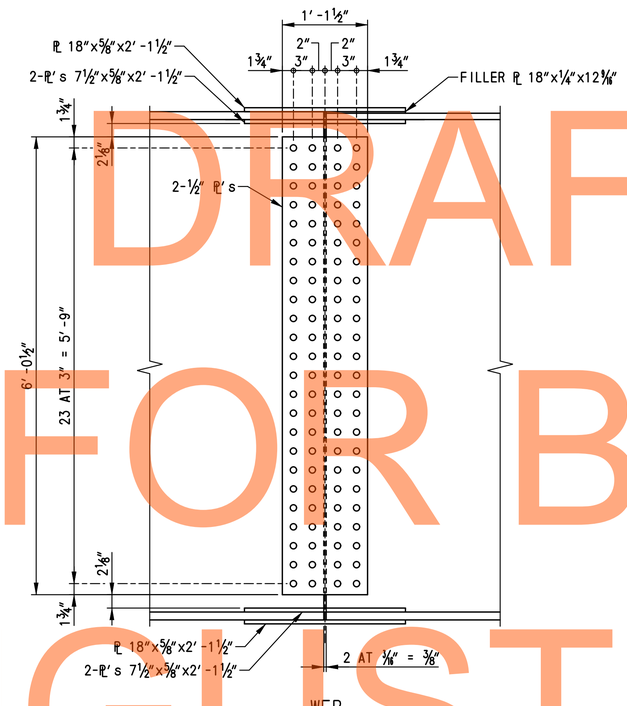

WEB

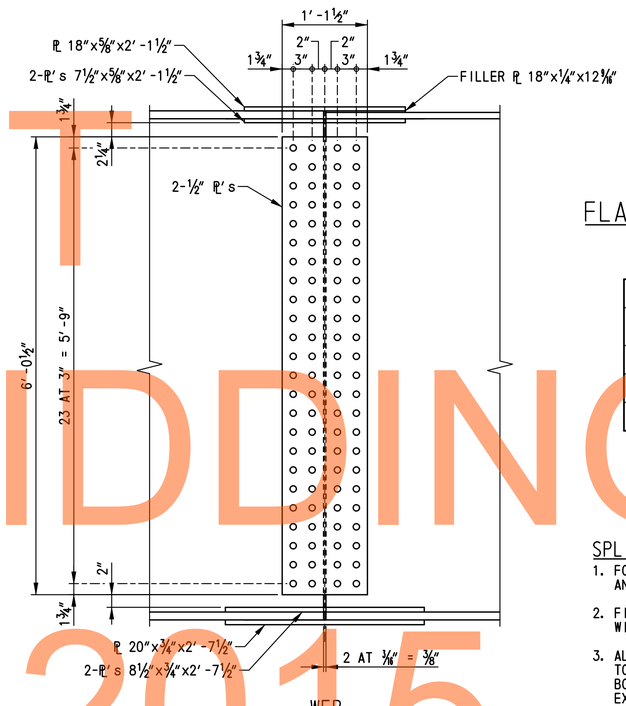

WEB

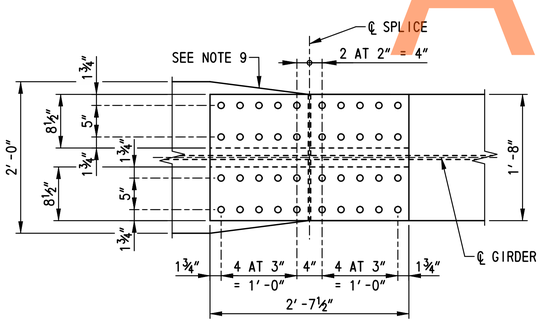

BOTTOM FLANGE

FIELD SPLICE DETAIL - TYPE X

SCALE: 1"=1'-0"

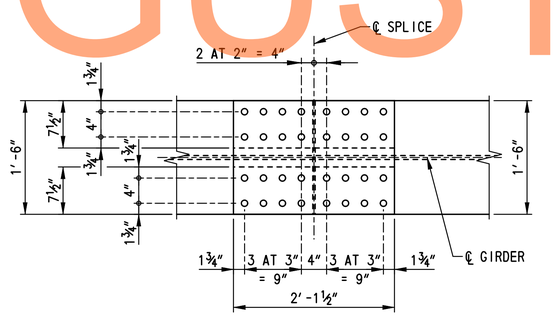

BOTTOM FLANGE

FIELD SPLICE DETAIL - TYPE XI

SCALE: 1"=1'-0"

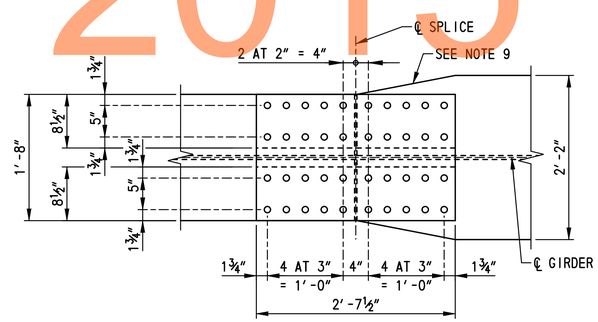

BOTTOM FLANGE

FIELD SPLICE DETAIL - TYPE XII

SCALE: 1"=1'-0"

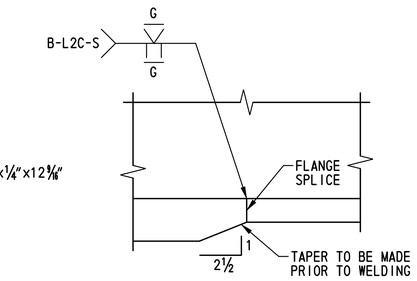

FLANGE TRANSITION SHOP SPLICE

SCALE: 3"=1'-0"

FIELD SPLICE LOCATION BY TYPE		
TYPE	LOCATION	
	GIRDER	SPLICE DESIGNATION
X	⑤	FS-5
XI	① THRU ④	FS-6
XII	⑤	FS-6

SPLICE NOTES:

1. FOR LOCATIONS OF FIELD SPLICES, SEE DWG. NOS. BM-02 AND FR-01.
2. FIELD SPLICES DESIGNED AS A SLIP CRITICAL CONNECTION WITH CLASS A SURFACE CONDITIONS.
3. ALL BOLTS TO BE ⅞" ø HIGH STRENGTH BOLTS CONFORMING TO A 490, TYPE 3. ALL BOLT HOLES SHALL BE 15/16" ø . ALL BOLTS SHALL BE FABRICATED WITH THREADS THAT ARE EXCLUDED FROM THE SHEAR PLANE.
4. THE MINIMUM ACCEPTABLE EDGE DISTANCE FOR ANY HOLE SHALL BE 1½".
5. BOLT HEADS SHALL BE ON THE EXTERIOR FACE OF THE EXTERIOR GIRDERS AND THE BOTTOM OF THE BOTTOM FLANGES.
6. BOLTS NOT SHOWN IN SPLICE.
7. SPACE SHEAR STUDS TO MISS TOP FLANGE SPLICE BOLTS.
8. ON EACH SIDE OF THE ℄ SPLICE A MINIMUM OF 50 PERCENT OF THE WEB, TOP FLANGE, AND BOTTOM FLANGE SPLICE BOLTS SHALL BE IN PLACE BEFORE THE GIRDER IS LEFT UNSUPPORTED.
9. WHEN FLANGE IS LARGER THAN ADJACENT FLANGE BY MORE THAN 2", THE LARGER FLANGE SHALL BE TAPERED TO SMALLER FLANGE WIDTH IN A DISTANCE OF ½ LENGTH OF SPLICE PLATE (BOTTOM FLANGE ONLY).
10. FIELD SPLICES SHALL BE COMPLETELY SHOP ASSEMBLED AND MATCH MARKED AFTER ALL SHOP WELDING HAS BEEN COMPLETED. CONTACT SURFACES SHALL BE FREE OF ALL OIL AND DIRT.
11. BUTT WELDS OF FLANGE SPLICE PLATES TO BE GROUND FLUSH PRIOR TO ATTACHING WEB PLATES.

DRAFT
NOT FOR BIDDING
AUGUST 2015

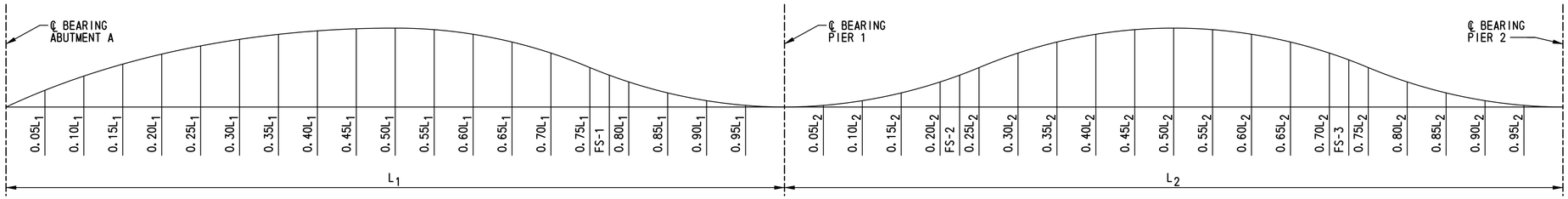

DEFLECTION AND TOTAL CAMBERS (IN.)

LOCATION		℄ BRG. ABUT. A	0.05L1	0.10L1	0.15L1	0.20L1	0.25L1	0.30L1	0.35L1	0.40L1	0.45L1	0.50L1	0.55L1	0.60L1	0.65L1	0.70L1	0.75L1	FS-1	0.80L1	0.85L1	0.90L1	0.95L1	℄ BRG. PIER 1	0.05L2	0.10L2	0.15L2	0.20L2	FS-2	0.25L2	0.30L2	0.35L2	0.40L2	0.45L2	0.50L2	0.55L2	0.60L2	0.65L2	0.70L2	FS-3	0.75L2	0.80L2	0.85L2	0.90L2	0.95L2	℄ BRG. PIER 2
GIRDER 1	DLS	0	1/8	1/4	5/16	7/16	1/2	9/16	9/16	5/8	5/8	5/8	9/16	1/2	7/16	3/8	5/16	5/16	1/4	1/8	1/16	1/16	0	0	0	1/16	1/16	1/8	1/8	3/16	1/4	1/4	1/4	5/16	1/4	1/4	3/16	1/8	1/8	1/8	1/16	0	0	0
	DLC	0	7/16	7/8	1 1/4	1 9/16	1 7/8	2 1/8	2 1/4	2 3/8	2 3/8	2 5/16	2 3/16	2 1/16	1 13/16	1 9/16	1 1/4	1 3/16	15/16	5/8	3/8	3/16	0	-1/16	0	1/8	1/4	3/8	3/8	9/16	11/16	13/16	7/8	15/16	7/8	11/16	5/8	1/2	3/8	5/16	1/8	0	-1/16	-1/16	0
	SDL	0	1/16	3/16	1/4	5/16	3/8	3/8	7/16	7/16	7/16	7/16	7/16	3/8	5/16	5/16	1/4	3/16	3/16	1/8	1/16	0	0	0	0	1/16	1/16	1/8	1/8	1/8	3/16	3/16	3/16	3/16	3/16	3/16	1/8	1/8	1/8	1/16	1/16	0	0	0	0
	TD&C	0	5/8	1 3/16	1 13/16	2 5/16	2 3/4	3 1/16	3 1/4	3 7/16	3 7/16	3 3/8	3 3/16	2 15/16	2 9/16	2 1/4	1 11/16	1 1/16	1 3/8	7/8	1/2	1/4	0	-1/16	0	1/4	3/8	5/8	5/8	7/8	1 1/8	1 1/4	1 3/16	1 7/16	1 5/16	1 1/4	15/16	3/4	5/8	1/2	1/4	0	-1/16	-1/16	0
	VCO	0	3/16	11/16	1	1 1/4	1 7/16	1 5/8	1 3/4	1 15/16	2	1 15/16	1 15/16	1 7/8	1 13/16	1 5/8	1 9/16	1 1/2	1 1/4	1 1/16	3/4	7/16	0	1/2	1 1/16	1 7/16	1 3/4	1 15/16	2 1/16	2 3/16	2 1/2	2 11/16	2 11/16	2 3/4	2 11/16	2 5/8	2 7/16	2 1/4	2 1/8	2 1/16	1 3/4	1 7/16	1	7/16	0
	TRC	0	15/16	2	2 11/16	3 3/16	4 3/16	4 11/16	5	5 3/8	5 7/16	5 5/16	5 1/8	4 13/16	4 3/8	3 7/8	3 3/8	3 1/16	2 5/8	1 15/16	1 1/4	11/16	0	7/16	1 1/16	1 11/16	2 1/8	2 7/16	2 11/16	3 1/16	3 5/8	3 15/16	4	4 1/16	4	3 7/8	3 3/8	3	2 3/4	2 9/16	2	1 7/16	15/16	3/8	0

LOCATION		℄ BRG. ABUT. A	0.05L1	0.10L1	0.15L1	0.20L1	0.25L1	0.30L1	0.35L1	0.40L1	0.45L1	0.50L1	0.55L1	0.60L1	0.65L1	0.70L1	0.75L1	FS-1	0.80L1	0.85L1	0.90L1	0.95L1	℄ BRG. PIER 1	0.05L2	0.10L2	0.15L2	0.20L2	FS-2	0.25L2	0.30L2	0.35L2	0.40L2	0.45L2	0.50L2	0.55L2	0.60L2	0.65L2	0.70L2	FS-3	0.75L2	0.80L2	0.85L2	0.90L2	0.95L2	℄ BRG. PIER 2
GIRDER 2	DLS	0	1/8	1/4	3/8	7/16	1/2	9/16	5/8	11/16	11/16	5/8	5/8	9/16	1/2	7/16	3/8	5/16	1/4	3/16	1/8	1/16	0	0	0	1/16	1/16	1/8	1/8	3/16	3/16	1/4	1/4	1/4	1/4	1/4	3/16	1/8	1/8	1/8	1/16	0	0	0
	DLC	0	1/2	15/16	1 5/16	1 11/16	2	2 1/4	2 7/16	2 1/2	2 9/16	2 1/2	2 3/8	2 3/16	1 15/16	1 11/16	1 9/16	1 3/8	1	11/16	7/16	3/16	0	-1/16	-1/16	1/16	1/4	3/8	7/16	9/16	3/4	7/8	15/16	15/16	7/8	11/16	11/16	1/2	3/8	5/16	1/8	0	-1/16	-1/16	0
	SDL	0	1/16	3/16	1/4	5/16	3/8	7/16	7/16	7/16	7/16	7/16	7/16	3/8	3/8	5/16	1/4	1/4	3/16	1/8	1/16	0	0	0	0	1/16	1/16	1/16	1/8	1/8	3/16	3/16	3/16	3/16	3/16	3/16	3/16	1/8	1/8	1/16	1/16	0	0	0	0
	TD&C	0	11/16	1 3/8	1 15/16	2 7/16	2 7/8	3 1/4	3 1/2	3 5/8	3 11/16	3 9/16	3 7/16	3 1/8	2 13/16	2 7/16	2 1/8	1 15/16	1 7/16	1	5/8	1/4	0	-1/16	-1/16	3/16	3/16	3/8	9/16	11/16	7/8	1 1/8	1 3/16	1 3/8	1 3/8	1 3/16	1 1/4	1	3/4	9/16	7/16	1/4	0	-1/16	-1/16	0
	VCO	0	3/8	11/16	15/16	1 1/4	1 7/16	1 9/16	1 3/4	1 7/8	1 15/16	2	1 7/8	1 11/16	1 3/4	1 11/16	1 5/8	1 1/2	1 1/4	15/16	5/8	5/16	0	7/16	15/16	1 3/8	1 5/8	1 7/8	1 15/16	2 1/4	2 7/16	2 11/16	2 5/8	2 11/16	2 5/8	2 9/16	2 3/8	2 3/16	2 1/16	2	1 11/16	1 3/8	1	9/16	0
	TRC	0	1 1/16	2 1/16	2 7/8	3 11/16	4 3/16	4 11/16	5 1/4	5 1/2	5 5/8	5 9/16	5 5/16	4 15/16	4 9/16	4 1/8	3 11/16	3 7/16	2 11/16	1 15/16	1 1/4	9/16	0	3/8	7/8	1 9/16	2	2 1/16	2 5/8	3 1/8	3 9/16	3 7/8	4	4 1/16	3 15/16	3 11/16	3 3/8	2 15/16	2 5/8	2 1/16	1 15/16	1 3/8	15/16	1/2	0

LOCATION		℄ BRG. ABUT. A	0.05L1	0.10L1	0.15L1	0.20L1	0.25L1	0.30L1	0.35L1	0.40L1	0.45L1	0.50L1	0.55L1	0.60L1	0.65L1	0.70L1	0.75L1	FS-1	0.80L1	0.85L1	0.90L1	0.95L1	℄ BRG. PIER 1	0.05L2	0.10L2	0.15L2	0.20L2	FS-2	0.25L2	0.30L2	0.35L2	0.40L2	0.45L2	0.50L2	0.55L2	0.60L2	0.65L2	0.70L2	FS-3	0.75L2	0.80L2	0.85L2	0.90L2	0.95L2	℄ BRG. PIER 2
GIRDER 3	DLS	0	1/8	1/4	3/8	1/2	9/16	5/8	11/16	11/16	11/16	11/16	5/8	5/8	9/16	7/16	3/8	5/16	1/4	3/16	1/8	1/16	0	0	0	0	1/16	1/16	1/8	3/16	3/16	1/4	1/4	1/4	1/4	3/16	3/16	1/8	1/16	1/16	0	0	-1/16	0
	DLC	0	1/2	1	1 3/8	1 3/4	2 1/8	2 3/8	2 9/16	2 5/8	2 11/16	2 5/8	2 1/2	2 5/16	2 1/16	1 3/4	1 7/16	1 3/16	1 1/16	3/4	7/16	3/16	0	-1/16	-1/16	1/16	1/4	5/16	3/8	9/16	3/4	7/8	15/16	15/16	7/8	11/16	11/16	1/2	3/8	5/16	1/8	-1/16	-1/8	-1/8	0
	SDL	0	1/8	3/16	1/4	5/16	3/8	7/16	7/16	1/2	1/2	1/2	7/16	7/16	3/8	5/16	1/4	1/4	3/16	1/8	1/16	0	0	0	0	0	1/16	1/16	1/8	1/8	3/16	3/16	3/16	3/16	3/16	3/16	1/8	1/8	1/16	1/16	0	0	0	0	0
	TD&C	0	3/4	1 7/16	2	2 5/16	3 1/16	3 7/16	3 11/16	3 13/16	3 7/8	3 9/16	3 3/16	3 3/8	3	2 1/2	2 1/16	1 7/8	1 1/2	1 1/16	5/8	1/4	0	-1/16	-1/16	1/16	3/8	1/2	5/8	7/8	1 1/8	9/16	1 3/8	1 3/8	1 3/16	1 3/16	1	3/4	1/2	7/16	1/8	-1/16	-3/16	-1/8	0
	VCO	0	3/8	11/16	15/16	1 1/4	1 7/16	1 11/16	1 3/4	1 7/8	1 15/16	2	1 7/8	1 13/16	1 3/4	1 11/16	1 1/2	1 3/8	1 1/4	15/16	5/8	5/16	0	9/16	15/16	1 3/8	1 5/8	1 7/8	1 15/16	2 1/4	2 7/16	2 9/16	2 5/8	2 11/16	2 5/8	2 9/16	2 1/2	2 5/16	2 1/8	2	1 11/16	1 3/8	1	9/16	0
	TRC	0	1 1/8	2 1/8	2 15/16	3 13/16	4 1/2	5 1/8	5 7/16	5 11/16	5 13/16	5 13/16	5 7/16	5 3/16	4 3/4	4 3/16	3 11/16	3 1/4	2 3/4	2	1 1/4	9/16	0	1/2	7/8	1 7/16	2	2 3/16	2 9/16	3 1/8	3 9/16	3 7/8	4	4 1/16	3 15/16	3 3/4	3 1/2	3 1/16	2 5/8	2 1/16	1 11/16	1 5/16	15/16	7/16	0

LOCATION		℄ BRG. ABUT. A	0.05L1	0.10L1	0.15L1	0.20L1	0.25L1	0.30L1	0.35L1	0.40L1	0.45L1	0.50L1	0.55L1	0.60L1	0.65L1	0.70L1	0.75L1	FS-1	0.80L1	0.85L1	0.90L1	0.95L1	℄ BRG. PIER 1	0.05L2	0.10L2	0.15L2	0.20L2	FS-2	0.25L2	0.30L2	0.35L2	0.40L2	0.45L2	0.50L2	0.55L2	0.60L2	0.65L2	0.70L2	FS-3	0.75L2	0.80L2	0.85L2	0.90L2	0.95L2	℄ BRG. PIER 2
GIRDER 4	DLS	0	1/8	1/4	3/8	1/2	9/16	11/16	11/16	3/4	3/4	3/4	11/16	5/8	9/16	1/2	3/8	3/8	5/16	3/16	1/8	1/16	0	0	0	0	1/16	1/16	1/8	1/8	3/16	3/16	1/4	1/4	3/16	3/16	1/8	1/8	1/16	1/16	0	0	-1/16	-1/16	0
	DLC	0	1/2	1	1 7/16	1 13/16	2 3/16	2 7/16	2 5/8	2 3/4	2 3/4	2 11/16	2 9/16	2 5/16	2 1/8	1 13/16	1 1/2	1 3/8	1 1/8	3/4	7/16	3/16	0	-1/16	-1/16	1/16	3/16	5/16	3/8	9/16	11/16	13/16	7/8	15/16	7/8	3/4	5/8	7/16	5/16	1/4	1/16	-1/16	-1/8	-1/8	0
	SDL	0	1/8	3/16	1/4	5/16	3/8	7/16	1/2	1/2	1/2	1/2	7/16	7/16	3/8	5/16	1/4	1/4	3/16	1/8	1/16	0	0	0	0	0	1/16	1/16	1/8	1/8	3/16	3/16	3/16	3/16	3/16	3/16	1/8	1/8	1/16	1/16	0	0	0	0	0
	TD&C	0	3/4	1 7/16	2 1/16	2 5/8	3 1/8	3 9/16	3 13/16	4	4	3 15/16	3 11/16	3 7/16	3 1/16	2 5/8	2 1/8	2	1 5/8	1 1/16	5/8	1/4	0	-1/16	-1/16	1/16	5/16	7/16	5/8	13/16	1 1/16	1 3/16	1 3/16	1 3/8	1 1/4	1 1/8	7/8	11/16	7/16	3/8	1/16	-1/16	-3/16	-3/16	0
	VCO	0	3/8	11/16	15/16	1 1/4	1 1/2	1 11/16	1 7/8	1 7/8	1 15/16	2	1 7/8	1 13/16	1 3/4	1 11/16	1 1/2	1 3/8	1 1/4	15/16	5/8	5/16	0	9/16	15/16	1 3/8	1 3/4	2	2 1/16	2 1/4	2 7/16	2 9/16	2 5/8	2 11/16	2 5/8	2 9/16	2 1/2	2 5/16	2 1/8	2	1 11/16	1 3/8	1	9/16	0
	TRC	0	1 1/8	2 1/8	3	3 7/8	4 5/8	5 1/4	5 11/16	5 7/8	5 15/16	5 15/16	5 5/16	5 3/8	4 13/16	4 5/16	3 5/8	3 3/8	2 7/8	2	1 1/4	9/16	0	1/2	7/8	1 7/16	2 1/16	2 7/16	2 11/16	3 1/16	3 1/2	3 3/4	3 15/16	4 1/16	3 7/8	3 11/16	3 3/8	3	2 9/16	2 3/8	1 3/4	1 5/16	11/16	3/8	0

LOCATION		℄ BRG. ABUT. A	0.05L1	0.10L1	0.15L1	0.20L1	0.25L1	0.30L1	0.35L1	0.40L1	0.45L1	0.50L1	0.55L1	0.60L1	0.65L1	0.70L1	0.75L1	FS-1	0.80L1	0.85L1	0.90L1	0.95L1	℄ BRG. PIER 1	0.05L2	0.10L2	0.15L2	0.20L2	FS-2	0.25L2	0.30L2	0.35L2	0.40L2	0.45L2	0.50L2	0.55L2	0.60L2	0.65L2	0.70L2	FS-3	0.75L2	0.80L2	0.85L2	0.90L2	0.95L2	℄ BRG. PIER 2
GIRDER 5	DLS	0	1/8	5/16	7/16	1/2	5/8	11/16	3/4	3/4	13/16	3/4	3/4	11/16	5/8	1/2	7/16	3/8	5/16	3/16	1/8	1/16	0	0	0	0	1/16	1/16	1/16	1/8	3/16	3/16	3/16	3/16	3/16	3/16	1/8	1/16	1/16	0	0	-1/16	-1/16	-1/16	0
	DLC	0	9/16	1 1/16	1 1/2	1 7/8	2 1/4	2 1/2	2 11/16	2 13/16	2 13/16	2 13/16	2 5/8	2 7/16	2 3/16	1 7/8	1 9/16	1 3/8	1 3/16	13/16	1/2	3/16	0	-1/16	-1/16	0	1/8	1/4	5/16	1/2	5/8	3/4	7/8	7/8	13/16	3/4	9/16	7/16	1/4	3/16	1/16	-1/8	-3/16	-1/8	0
	SDL	0	1/8	3/16	1/4	3/8	7/16	7/16	1/2	1/2	1/2	1/2	1/2	7/16	3/8	5/16	1/4	1/4	3/16	1/8	1/16	1/16	0	0	0	0	1/16	1/16	1/8	1/8	3/16	3/16	3/16	3/16	3/16	3/16	1/8	1/8	1/16	1/16	0	0	0	0	0
	TD&C	0	13/16	1 9/16	2 3/16	2 3/4	3 5/16	3 5/8	3 15/16	4 1/16	4 1/8	4 1/16	3 7/8	3 9/16	3 3/16	2 11/16	2 1/4	2	1 11/16	1 1/8	11/16	5/16	0	-1/16	-1/16	0	1/4	3/8	1/2	3/4	1	1 1/8	1 1/4	1 1/4	1 3/16	1 1/8	13/16	5/8	3/8	1/4	1/16	-3/16	-1/4	-3/16	0
	VCO	0	3/8	11/16	1 1/16	1 1/4	1 1/2	1 11/16	1 7/8	1 7/8	1 15/16	2	2	1 15/16	1 3/4	1 11/16	1 1/2	1 3/8	1 1/4	15/16	3/4	5/16	0	9/16	15/16	1 3/8	1 3/4	1 15/16	2 1/16	2 1/4	2 7/16	2 9/16	2 5/8	2 11/16	2 3/4	2 9/16	2 1/2	2 5/16	2 1/8	2	1 11/16	1 3/8	1	9/16	0
	TRC	0	1 3/16	2 1/4	3 1/4	4	4 13/16	5 3/16	5 13/16	5 15/16	6 1/16	6 1/16	5 7/8	5 1/2	4 15/16	4 3/8	3 3/4	3 3/8	2 15/16	2 1/16	1 7/16	5/8	0	1/2	7/8	1 3/8	2	2 5/16	2 9/16	3	3 7/16	3 11/16	3 7/8	3 15/16	3 15/16	3 11/16	3 3/16	2 15/16	2 1/2	2 1/4	1 3/4	1 3/16	3/4	3/8	0

NOTES:

1. ALL GIRDERS OF ALL SPANS SHALL BE CAMBERED FOR DEAD LOAD DEFLECTION TO THE DIMENSIONS SHOWN ON THIS PLAN. THE CAMBER TOLERANCE IS NOTHING UNDER TO 3/4 INCH OVER.
2. CAMBERS ARE SHOWN IN INCHES.
3. POSITIVE DEFLECTIONS ARE MEASURED IN THE DOWNWARD DIRECTION. POSITIVE VERTICAL CURVE ORDINATE AND POSITIVE CAMBER ARE MEASURED IN THE UPWARD DIRECTION.

LEGEND:

DLS - DENOTES DEFLECTION DUE TO STRUCTURAL STEEL

DLC - DENOTES DEFLECTION DUE TO CONCRETE SLAB

SDL - DENOTES DEFLECTION DUE TO PARAPET AND FUTURE WEARING SURFACE

TD&C - DENOTES TOTAL DEAD LOAD DEFLECTION AND CAMBER

VCO - DENOTES CAMBER FOR VERTICAL CURVE ORDINATE DUE TO ROADWAY PROFILE

TRC - TOTAL REQUIRED CAMBER = TD&C + VCO

DRAFT
NOT FOR BIDDING
AUGUST 2015

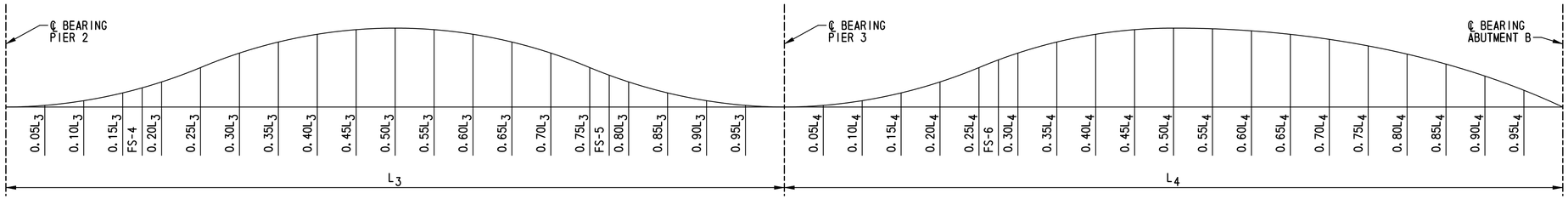

DEFLECTION AND TOTAL CAMBERS (IN.)

LOCATION		℄ BRG. PIER 2	0.05L3	0.10L3	0.15L3	FS-4	0.20L3	0.25L3	0.30L3	0.35L3	0.40L3	0.45L3	0.50L3	0.55L3	0.60L3	0.65L3	0.70L3	0.75L3	FS-5	0.80L3	0.85L3	0.90L3	0.95L3	℄ BRG. PIER 3	0.05L4	0.10L4	0.15L4	0.20L4	0.25L4	FS-6	0.30L4	0.35L4	0.40L4	0.45L4	0.50L4	0.55L4	0.60L4	0.65L4	0.70L4	0.75L4	0.80L4	0.85L4	0.90L4	0.95L4	℄ BRG. ABUT. B
GIRDER 1	DLS	0	1/16	3/16	5/16	7/16	1/2	5/8	3/4	7/8	15/16	1	1	15/16	7/8	3/4	5/8	1/2	1/2	3/8	3/16	1/16	0	0	1/16	1/8	3/16	5/16	7/16	9/16	9/16	11/16	13/16	15/16	1	1	1 1/16	1	15/16	7/8	3/4	9/16	3/8	3/16	0
	DLC	0	5/16	11/16	1 3/16	1 11/16	1 11/16	2 3/16	2 11/16	3 1/16	3 3/8	3 1/2	3 1/2	3 3/8	3 1/8	2 13/16	2 5/16	1 13/16	1 3/4	1 1/4	13/16	3/8	1/8	0	1/16	1/4	9/16	15/16	1 3/8	1 13/16	1 13/16	2 1/4	2 5/8	2 15/16	3 3/16	3 5/16	3 5/16	3 1/4	3 1/16	2 3/4	2 5/16	1 7/8	1 1/4	11/16	0
	SDL	0	1/16	1/8	1/4	5/16	3/8	7/16	9/16	5/8	11/16	11/16	11/16	11/16	5/8	9/16	1/2	3/8	3/8	1/4	3/16	1/16	0	0	0	1/16	1/8	3/16	5/16	3/8	3/8	1/2	9/16	5/8	11/16	11/16	11/16	11/16	5/8	9/16	1/2	3/8	1/4	1/8	0
	TD&C	0	7/16	1	1 3/4	2 7/16	2 9/16	3 1/4	4	4 9/16	5	5 3/16	5 3/16	5	4 5/8	4 1/8	3 7/16	2 11/16	2 5/8	1 7/8	1 9/16	1/2	1/8	0	1/8	1/16	7/8	1 7/16	2 1/8	2 3/4	2 3/4	3 7/16	4	4 1/2	4 7/8	5	5 1/16	4 15/16	4 5/8	4 3/16	3 9/16	2 13/16	1 7/8	1	0
	VCO	0	3/4	1 3/8	1 15/16	2 7/16	2 7/16	3	3 1/4	3 9/16	3 13/16	3 7/8	3 7/8	3 13/16	3 3/4	3 9/16	3 1/4	2 15/16	2 7/8	2 1/2	2 1/16	1 3/8	11/16	0	1/2	1	1 1/2	1 7/8	2 1/8	2 3/8	2 3/8	2 5/8	2 3/4	2 7/8	2 7/8	2 3/4	2 13/16	2 9/16	2 1/16	2 1/16	1 7/8	1 3/8	1 1/16	7/16	0
	TRC	0	1 3/16	2 3/8	3 11/16	4 7/8	5	6 1/4	7 1/4	8 1/8	8 13/16	9 1/16	9 1/16	8 13/16	8 3/8	7 11/16	6 11/16	5 5/8	5 1/2	4 3/8	3 1/4	1 7/8	11/16	0	5/8	1 7/16	2 3/8	3 3/16	4 1/4	5 1/8	5 1/8	6 1/16	6 3/4	7 3/8	7 3/4	7 3/4	7 7/8	7 1/2	7 1/16	6 5/16	5 7/16	4 3/16	2 15/16	1 7/16	0

LOCATION		℄ BRG. PIER 2	0.05L3	0.10L3	0.15L3	FS-4	0.20L3	0.25L3	0.30L3	0.35L3	0.40L3	0.45L3	0.50L3	0.55L3	0.60L3	0.65L3	0.70L3	0.75L3	FS-5	0.80L3	0.85L3	0.90L3	0.95L3	℄ BRG. PIER 3	0.05L4	0.10L4	0.15L4	0.20L4	0.25L4	FS-6	0.30L4	0.35L4	0.40L4	0.45L4	0.50L4	0.55L4	0.60L4	0.65L4	0.70L4	0.75L4	0.80L4	0.85L4	0.90L4	0.95L4	℄ BRG. ABUT. B
GIRDER 2	DLS	0	1/16	3/16	3/8	1/2	1/2	11/16	13/16	15/16	1	1 1/16	1 1/16	1	15/16	13/16	11/16	1/2	1/2	3/8	1/4	1/8	0	0	1/16	1/8	3/16	3/16	1/2	5/8	5/8	3/4	7/8	1	1 1/16	1 1/8	1 1/8	1 1/16	1	15/16	3/4	5/8	7/16	1/4	0
	DLC	0	5/16	3/4	1 1/4	1 3/4	1 13/16	2 3/8	2 7/8	3 1/4	3 3/16	3 11/16	3 3/4	3 5/8	3 5/16	2 15/16	2 1/16	1 15/16	1 7/8	1 5/16	13/16	3/8	1/8	0	1/16	5/16	5/8	1	1 1/2	1 15/16	1 15/16	2 3/8	2 13/16	3 1/8	3 3/8	3 1/2	3 13/16	3 7/16	3 1/4	2 15/16	2 1/2	2	1 3/8	11/16	0
	SDL	0	1/16	1/8	1/4	3/8	3/8	1/2	9/16	5/8	11/16	3/4	3/4	3/4	11/16	9/16	1/2	3/8	3/8	1/4	3/16	1/16	0	0	0	1/16	1/8	1/4	5/16	7/16	7/16	1/2	5/8	11/16	11/16	3/4	3/4	3/4	11/16	5/8	1/2	7/16	5/16	1/8	0
	TD&C	0	7/16	1 1/16	1 7/8	2 5/8	2 11/16	3 13/16	4 1/4	4 13/16	5 1/4	5 1/2	5 9/16	5 3/8	4 15/16	4 3/16	3 5/8	2 13/16	2 3/4	1 15/16	1 1/4	9/16	1/8	0	1/8	1/2	15/16	1 9/16	2 3/16	3	3	3 5/8	4 3/16	4 13/16	5 1/8	5 3/8	5 7/16	5 1/4	4 15/16	4 1/2	3 3/4	3 1/16	2 1/8	1 1/16	0
	VCO	0	3/4	1 3/8	2 1/16	2 1/2	2 9/16	3	3 1/4	3 9/16	3 7/8	3 7/8	3 9/16	3 3/4	3 9/16	3 3/8	2 15/16	2 7/8	2 3/4	2 1/2	2 1/16	1 3/8	11/16	0	1/2	1	1 1/2	1 7/8	2 1/8	2 5/8	2 3/8	2 5/8	2 3/4	2 7/8	2 7/8	2 13/16	2 9/16	2 1/16	2 1/16	1 7/8	1 3/8	1 1/16	5/16	0
	TRC	0	1 3/16	2 1/16	3 5/16	5 1/8	5 1/4	6 5/16	7 1/2	8 3/8	9 1/16	9 3/8	9 7/16	9 3/16	8 11/16	7 7/8	7	5 3/4	5 5/8	4 7/16	3 5/16	1 15/16	15/16	0	5/8	1 1/2	2 7/16	3 7/16	4 7/16	5 5/16	5 3/8	6 1/4	7 1/16	7 11/16	8	8 1/4	8 1/4	7 11/16	7 3/8	6 5/8	5 5/8	4 7/16	3 3/16	1 5/8	0

LOCATION		℄ BRG. PIER 2	0.05L3	0.10L3	0.15L3	FS-4	0.20L3	0.25L3	0.30L3	0.35L3	0.40L3	0.45L3	0.50L3	0.55L3	0.60L3	0.65L3	0.70L3	0.75L3	FS-5	0.80L3	0.85L3	0.90L3	0.95L3	℄ BRG. PIER 3	0.05L4	0.10L4	0.15L4	0.20L4	0.25L4	FS-6	0.30L4	0.35L4	0.40L4	0.45L4	0.50L4	0.55L4	0.60L4	0.65L4	0.70L4	0.75L4	0.80L4	0.85L4	0.90L4	0.95L4	℄ BRG. ABUT. B
GIRDER 3	DLS	0	1/8	1/4	3/8	9/16	9/16	11/16	7/8	1	1 1/16	1 1/8	1 1/8	1 1/8	1	7/8	13/16	9/16	1/2	3/8	1/4	1/8	0	0	1/16	1/8	1/4	3/8	1/2	5/8	11/16	13/16	15/16	1 1/16	1 1/8	1 1/8	1 1/8	1 1/8	1 1/8	15/16	13/16	5/8	7/16	1/4	0
	DLC	0	5/16	3/4	1 3/8	1 7/8	1 15/16	2 1/2	3	3 1/16	3 3/4	3 7/8	3 15/16	3 3/4	3 1/2	3 1/16	2 13/16	2	1 15/16	1 3/8	7/8	3/8	1/8	0	1/8	5/16	5/8	1 1/16	1 9/16	2	2 1/16	2 9/16	3	3 5/16	3 9/16	3 11/16	3 3/4	3 5/8	3 7/16	3 1/16	2 5/8	2 1/16	1 7/16	3/4	0
	SDL	0	1/16	1/8	1/4	3/8	3/8	1/2	5/8	11/16	3/4	3/4	3/4	3/4	11/16	5/8	1/2	3/8	3/8	1/4	3/16	1/16	0	0	0	1/16	1/8	1/4	5/16	7/16	7/16	1/2	5/8	11/16	3/4	3/4	3/4	3/4	11/16	5/8	9/16	7/16	5/16	1/8	0
	TD&C	0	1/2	1 1/8	2	2 13/16	2 7/8	3 11/16	4 1/2	5 1/8	5 9/16	5 3/4	5 13/16	5 9/16	5 7/16	4 9/16	3 3/4	2 15/16	2 13/16	2	1 5/16	9/16	1/8	0	3/16	1/2	1	1 11/16	2 3/8	3 1/16	3 3/16	3 7/8	4 9/16	5 1/16	5 7/16	5 5/8	5 11/16	5 1/2	5 3/16	4 5/8	4	3 1/8	2 3/16	1 1/8	0
	VCO	0	3/4	1 3/8	2 1/16	2 1/2	2 9/16	3	3 3/8	3 5/8	3 11/16	3 7/8	3 7/8	3 15/16	3 3/4	3 9/16	3 3/8	2 15/16	2 7/8	2 1/2	2 1/16	1 1/2	11/16	0	5/8	1	1 1/2	1 7/8	2 1/4	2 7/16	2 1/2	2 5/8	2 3/4	2 7/8	2 7/8	2 7/8	2 11/16	2 11/16	2 1/16	2 1/4	1 7/8	1 1/2	1 1/16	9/16	0
	TRC	0	1 1/4	2 1/2	4 1/16	5 5/16	5 7/16	6 11/16	7 7/8	8 3/4	9 3/8	9 5/8	9 11/16	9 1/2	8 15/16	8 1/8	7 1/8	5 7/8	5 11/16	4 1/2	3 3/8	2 1/16	15/16	0	11/16	1 1/2	2 1/2	3 3/16	4 5/8	5 1/2	5 11/16	6 1/2	7 3/16	7 15/16	8 5/16	8 1/2	8 1/2	8 3/16	7 5/8	6 7/8	5 7/8	4 5/8	3 1/4	1 11/16	0

LOCATION		℄ BRG. PIER 2	0.05L3	0.10L3	0.15L3	FS-4	0.20L3	0.25L3	0.30L3	0.35L3	0.40L3	0.45L3	0.50L3	0.55L3	0.60L3	0.65L3	0.70L3	0.75L3	FS-5	0.80L3	0.85L3	0.90L3	0.95L3	℄ BRG. PIER 3	0.05L4	0.10L4	0.15L4	0.20L4	0.25L4	FS-6	0.30L4	0.35L4	0.40L4	0.45L4	0.50L4	0.55L4	0.60L4	0.65L4	0.70L4	0.75L4	0.80L4	0.85L4	0.90L4	0.95L4	℄ BRG. ABUT. B
GIRDER 4	DLS	0	1/8	1/4	7/16	9/16	9/16	3/4	15/16	1 1/16	1 1/8	1 3/16	1 3/16	1 1/8	1 1/16	15/16	3/4	9/16	9/16	3/8	1/4	1/8	0	0	1/16	1/8	1/4	3/8	9/16	11/16	11/16	7/8	1	1 1/8	1 3/16	1 1/4	1 1/4	1 3/16	1 1/8	1	7/8	11/16	1/2	1/4	0
	DLC	0	3/8	13/16	1 7/16	1 15/16	2	2 9/16	3 1/8	3 9/16	3 7/8	4 1/16	4 1/16	3 15/16	3 5/8	3 3/16	2 5/8	2 1/16	1 15/16	1 7/16	7/8	3/8	1/8	0	1/8	5/16	11/16	1 1/8	1 5/8	2 1/8	2 3/16	2 5/8	3 1/8	3 7/16	3 3/4	3 7/8	3 7/8	3 11/16	3 9/16	3 3/16	2 3/4	2 1/16	1 1/2	3/4	0
	SDL	0	1/16	3/16	1/4	3/8	3/8	1/2	5/8	11/16	3/4	13/16	13/16	3/4	3/4	5/8	1/2	7/16	3/8	5/16	3/16	1/16	0	0	0	1/16	1/8	1/4	5/16	7/16	7/16	9/16	5/8	11/16	3/4	13/16	13/16	3/4	3/4	5/8	9/16	7/16	5/16	3/16	0
	TD&C	0	9/16	1 1/4	2 1/8	2 7/8	2 15/16	3 13/16	4 11/16	5 5/16	5 3/4	6 1/16	6 1/16	5 15/16	5 7/16	4 3/4	3 7/8	3 1/16	2 7/8	2 1/8	1 5/16	9/16	1/8	0	3/16	1/2	1 1/16	1 3/4	2 1/2	3 1/4	3 5/16	4 1/16	4 3/4	5 1/4	5 11/16	5 9/16	5 9/16	5 3/4	5 1/16	4 13/16	4 3/16	3 5/16	2 5/16	1 3/16	0
	VCO	0	3/4	1 3/8	2 1/16	2 1/2	2 9/16	3	3 3/8	3 5/8	3 11/16	4	4	3 15/16	3 7/8	3 11/16	3 3/8	3	2 15/16	2 9/16	2 1/16	1 1/2	11/16	0	5/8	1 1/8	1 1/2	1 7/8	2 1/4	2 7/16	2 1/2	2 5/8	2 3/4	2 7/8	2 7/8	2 7/8	2 11/16	2 11/16	2 1/16	2 1/4	1 7/8	1 1/2	1 1/16	9/16	0
	TRC	0	1 5/16	2 5/8	4 3/16	5 3/8	5 1/2	6 13/16	8 1/16	8 15/16	9 9/16	10 1/16	10 1/16	9 3/4	9 5/16	8 7/16	7 1/4	6 1/16	5 11/16	4 11/16	3 3/8	2 1/16	15/16	0	11/16	1 5/8	2 9/16	3 5/8	4 3/4	5 11/16	5 13/16	6 11/16	7 1/2	8 1/8	8 9/16	8 13/16	8 3/4	8 1/16	7 7/8	7 1/16	6 1/16	4 15/16	3 3/8	1 3/4	0

LOCATION		℄ BRG. PIER 2	0.05L3	0.10L3	0.15L3	FS-4	0.20L3	0.25L3	0.30L3	0.35L3	0.40L3	0.45L3	0.50L3	0.55L3	0.60L3	0.65L3	0.70L3	0.75L3	FS-5	0.80L3	0.85L3	0.90L3	0.95L3	℄ BRG. PIER 3	0.05L4	0.10L4	0.15L4	0.20L4	0.25L4	FS-6	0.30L4	0.35L4	0.40L4	0.45L4	0.50L4	0.55L4	0.60L4	0.65L4	0.70L4	0.75L4	0.80L4	0.85L4	0.90L4	0.95L4	℄ BRG. ABUT. B
GIRDER 5	DLS	0	1/8	1/4	7/16	5/8	5/8	11/16	1	1 1/8	1 3/16	1 1/4	1 1/4	1 3/16	1 1/16	15/16	3/4	5/8	9/16	3/8	1/4	1/8	0	0	1/16	1/8	1/4	7/16	9/16	3/4	3/4	15/16	1 1/16	1 3/16	1 1/4	1 3/16	1 5/16	1 1/4	1 3/16	1 1/16	15/16	3/4	1/2	1/4	0
	DLC	0	3/8	7/8	1 7/16	2	2 1/16	2 11/16	3 1/4	3 11/16	4	4 3/16	4 3/16	4 1/16	3 11/16	3 1/4	2 11/16	2 1/8	2	1 7/16	7/8	3/8	1/8	0	1/8	3/8	11/16	1 3/16	1 11/16	2 3/16	2 1/4	2 3/4	3 1/4	3 9/16	3 7/8	4	4 1/16	3 15/16	3 11/16	3 3/16	2 13/16	2 1/4	1 9/16	13/16	0
	SDL	0	1/16	3/16	5/16	3/8	7/16	9/16	5/8	3/4	13/16	13/16	13/16	13/16	3/4	11/16	9/16	7/16	3/8	5/16	3/16	1/16	0	0	0	1/16	1/8	1/4	3/8	7/16	1/2	9/16	11/16	3/4	13/16	13/16	13/16	13/16	3/4	11/16	9/16	7/16	5/16	3/16	0
	TD&C	0	9/16	1 5/16	2 3/16	3	3 1/16	4 1/16	4 7/8	5 5/16	6	6 1/4	6 1/4	6 1/16	5 1/2	4 7/8	4	3 3/16	2 15/16	2 1/8	1 5/16	9/16	1/8	0	3/16	9/16	1 1/16	1 7/8	2 5/8	3 3/8	3 1/2	4 1/4	5	5 1/2	5 5/16	6 1/8	6 3/16	6	5 5/8	5 1/16	4 5/16	3 7/16	2 3/8	1 1/4	0
	VCO	0	3/4	1 3/8	2 1/16	2 1/2	2 9/16	3	3 3/8	3 5/8	3 11/16	4	4	3 15/16	3 7/8	3 11/16	3 3/8	3	2 15/16	2 9/16	2 1/16	1 1/2	11/16	0	5/8	1 1/8	1 1/2	1 7/8	2 1/4	2 7/16	2 1/2	2 5/8	2 3/4	2 7/8	2 7/8	2 7/8	2 11/16	2 11/16	2 1/16	2 1/4	1 7/8	1 1/2	1 1/16	9/16	0
	TRC	0	1 5/16	2 11/16	4 1/4	5 1/2	5 11/16	7 1/16	8 1/4	9 3/16	9 13/16	10 1/4	10 1/4	10	9 3/8	8 3/16	7 3/8	6 3/16	5 7/8	4 11/16	3 3/8	2 1/16	15/16	0	11/16	1 11/16	2 9/16	3 3/4	4 7/8	5 13/16	6	6 7/8	7 7/8	8 3/8	8 13/16	9	9	8 11/16	8 1/16	7 3/16	6 3/16	4 15/16	3 7/16	1 13/16	0

NOTES:

1. ALL GIRDERS OF ALL SPANS SHALL BE CAMBERED FOR DEAD LOAD DEFLECTION TO THE DIMENSIONS SHOWN ON THIS PLAN. THE CAMBER TOLERANCE IS NOTHING UNDER TO 3/4 INCH OVER.
2. CAMBERS ARE SHOWN IN INCHES.
3. POSITIVE DEFLECTIONS ARE MEASURED IN THE DOWNWARD DIRECTION. POSITIVE VERTICAL CURVE ORDINATE AND POSITIVE CAMBER ARE MEASURED IN THE UPWARD DIRECTION.

LEGEND:

DLS - DENOTES DEFLECTION DUE TO STRUCTURAL STEEL

DLC - DENOTES DEFLECTION DUE TO CONCRETE SLAB

SDL - DENOTES DEFLECTION DUE TO PARAPET AND FUTURE WEARING SURFACE

TD&C - DENOTES TOTAL DEAD LOAD DEFLECTION AND CAMBER

VCO - DENOTES CAMBER FOR VERTICAL CURVE ORDINATE DUE TO ROADWAY PROFILE

TRC - TOTAL REQUIRED CAMBER = TD&C + VCO

DRAFT
NOT FOR BIDDING
AUGUST 2015

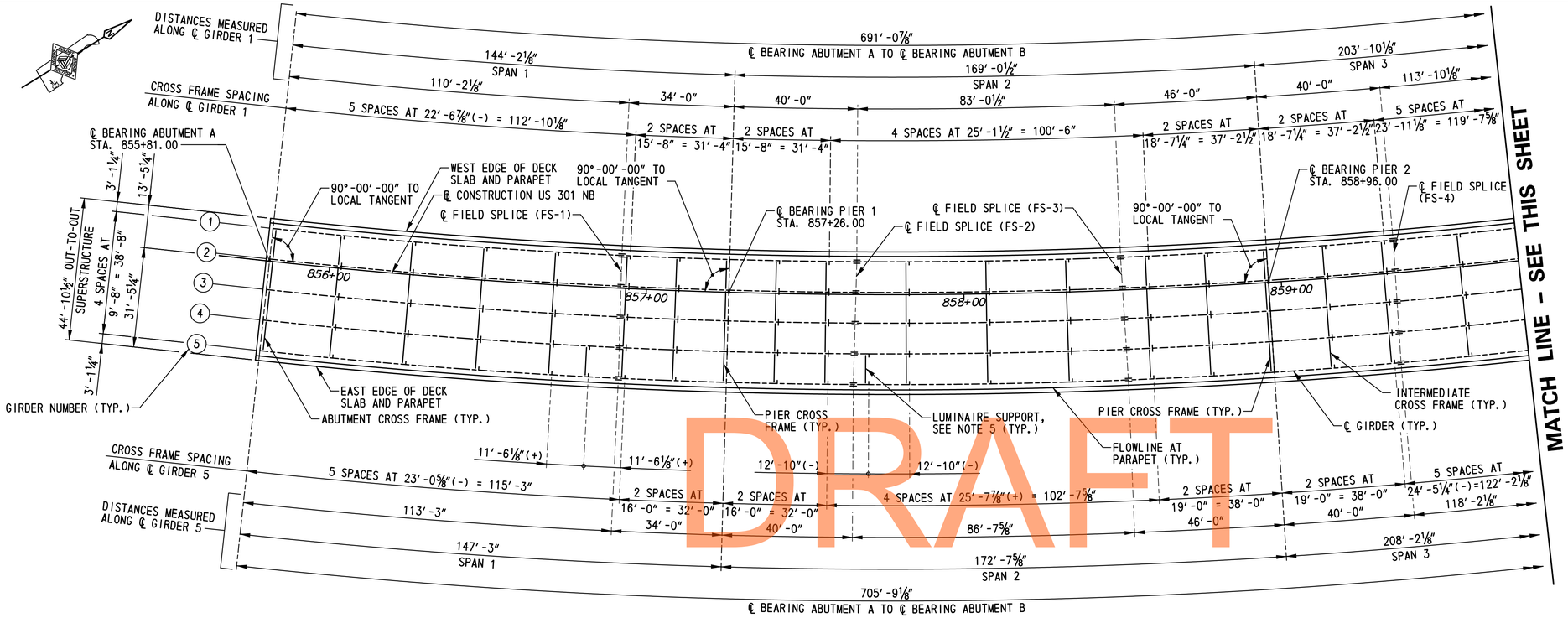

FRAMING PLAN

SCALE: 1"=20'-0"

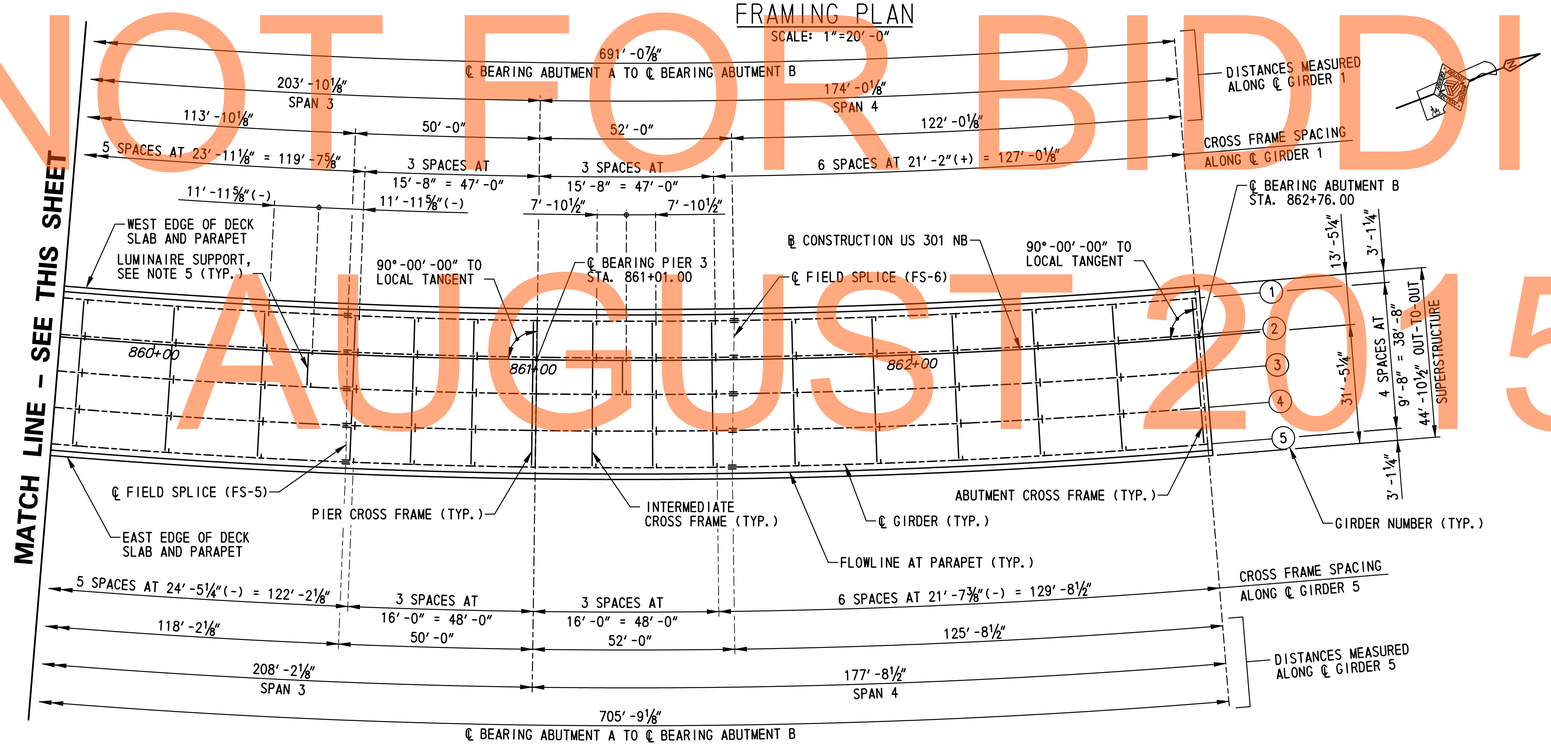

FRAMING PLAN

SCALE: 1"=20'-0"

GIRDER RADII TABLE	
GIRDER NUMBER	RADIUS
1	1819.67
2	1829.33
3	1839.00
4	1848.67
5	1858.33

NOTES:

1. ALL GIRDERS ARE CONCENTRIC TO THE ℄ CONSTRUCTION.
2. INTERMEDIATE, ABUTMENT AND PIER CROSS FRAMES AND LUMINAIRE SUPPORTS ARE RADIAL TO THE ℄ CONSTRUCTION US 301 NB.
3. FOR CROSS FRAME DETAILS, SEE DWG. NO. BM-03.
4. FOR FIELD SPLICE DETAILS, SEE DWG. NOS. BM-05 THRU BM-08.
5. LUMINAIRE SUPPORT SPACING AT LUMINAIRES LOCATED BETWEEN GIRDERS 4 AND 5 IS MEASURED ALONG GIRDER 5. LUMINAIRE SUPPORT SPACING LOCATED BETWEEN GIRDERS 2 AND 3 IS MEASURED ALONG GIRDER 2. FOR LUMINAIRE SUPPORT DETAILS, SEE DWG. NO. BM-04. FOR ADDITIONAL INFORMATION ON LUMINAIRE AND ASSOCIATED ELECTRICAL CONDUIT, SEE DWG. NOS. LI-13 AND LI-14.

NOT FOR BIDDING
AUGUST 2015
DRAFT

BR1-3
FR-01

DELAWARE DEPARTMENT OF TRANSPORTATION

ADDENDUMS / REVISIONS

SCALE 0 20 40 60 FEET

US 301 & SR 1 INTERCHANGE

CONTRACT	BRIDGE NO.	1-433
T200911302	DESIGNED BY: A.D.D.	
COUNTY		
NEW CASTLE	CHECKED BY: B.K.B.	

FRAMING PLAN

SHEET NO. 272
TOTAL SHTS. 491

N:\31653-000\Contract 1B\CADD\Bridge\Br_No433\FR01_br1-433.dgn
2/5/2015 10:59:23 AM

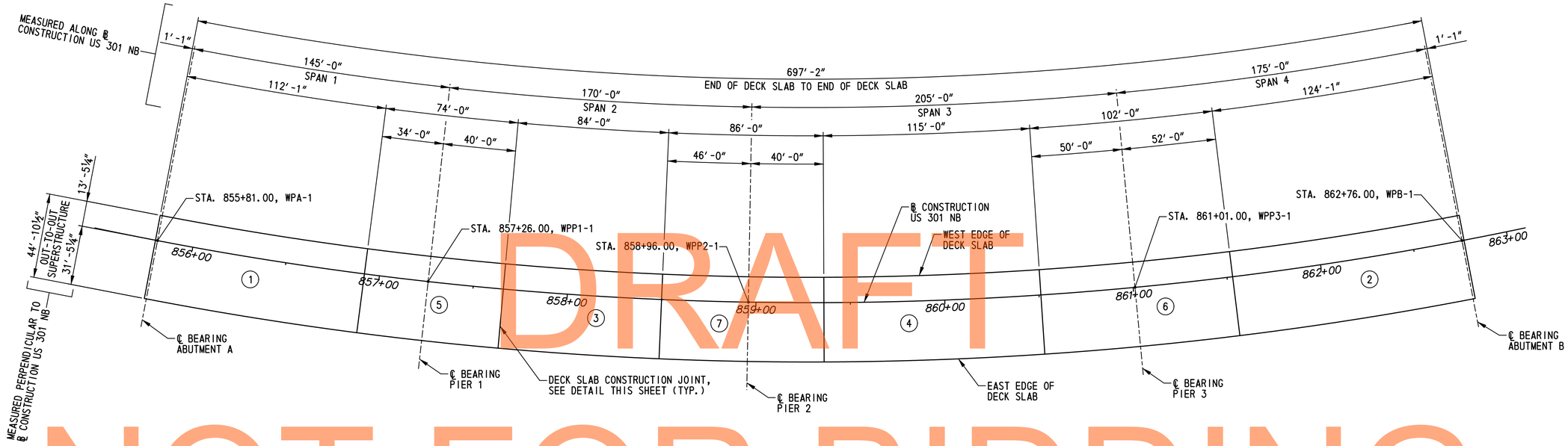

DECK SLAB POURING SEQUENCE PLAN

SCALE: 1"=30'-0"

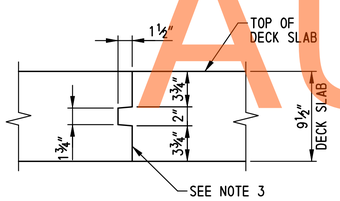

DECK SLAB CONSTRUCTION JOINT DETAIL

SCALE: 1½"=1'-0"

NOTES:

1. THE POURING SEQUENCE FOR THE DECK SLAB SHALL BE MADE IN THE NUMBERED ORDER INDICATED. THERE MUST BE AT LEAST FORTY (40) HOURS BETWEEN THE COMPLETION OF ONE NUMBERED POUR AND THE START OF THE NEXT NUMBERED POUR EXCEPT THAT THERE MAY BE SIXTEEN (16) HOURS BETWEEN POURS NUMBERED 5, 6 AND 7. THE CONTRACTOR MAY REVERSE THE ORDER OF POURS NUMBERED 1 AND 2 AND 3 AND 4. THE CONTRACTOR MAY COMPLETE IN ANY ORDER POURS NUMBERED 5, 6 AND 7.
2. THE CONTRACTOR SHALL FOLLOW THE POURING SEQUENCE SHOWN ON THESE PLANS. NO OTHER ALTERNATE POURING SEQUENCE WILL BE ALLOWED FOR THIS PROJECT.
3. ENTIRE FACE OF CONSTRUCTION JOINT SHALL BE COATED WITH AN APPROVED EPOXY BONDING COMPOUND.
4. FOR FINISHED ROADWAY ELEVATIONS, SEE DWG. NOS. RE-01 AND RE-02.
5. FOR DECK SLAB REINFORCEMENT, SEE DWG. NOS. DK-01 THRU DK-04.

DRAFT
NOT FOR BIDDING
AUGUST 2015

N:\31653-000\Contract 1B\CADD\Bridge\Br_No433\PS01_br1-433.dgn
2/5/2013 11:02:13 AM

DELAWARE DEPARTMENT OF TRANSPORTATION	ADDENDUMS / REVISIONS	SCALE: AS SHOWN	US 301 & SR 1 INTERCHANGE	CONTRACT T200911302	BRIDGE NO. 1-433	DECK SLAB POURING SEQUENCE	BR1-3 PS-01
				COUNTY NEW CASTLE	DESIGNED BY: W.T.R.		SHEET NO. 273
					CHECKED BY: B.K.B.		TOTAL SHTS. 491

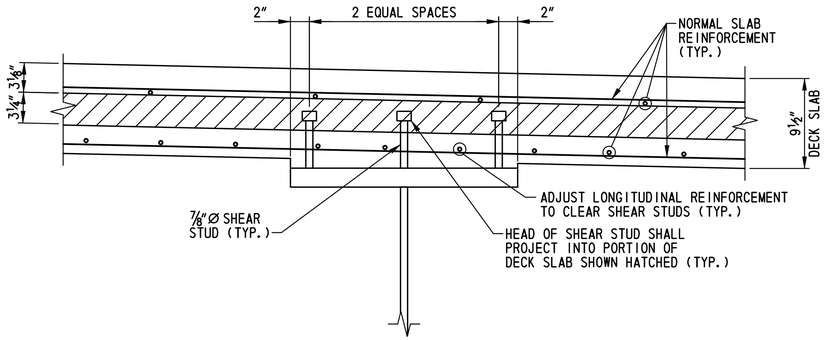

SHEAR STUD DETAIL

SCALE: 1½"=1'-0"

NOTES:

1. S.I.P. FORMS NOT SHOWN FOR CLARITY.
2. FOR LONGITUDINAL SPACING OF SHEAR STUDS SEE DWG. NO. BM-01.

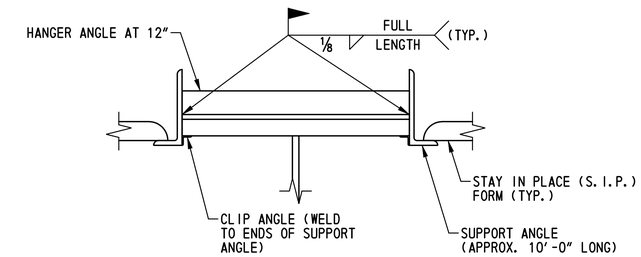

TENSION FLANGE S.I.P. FORM ATTACHMENT DETAIL

SCALE: 1½"=1'-0"

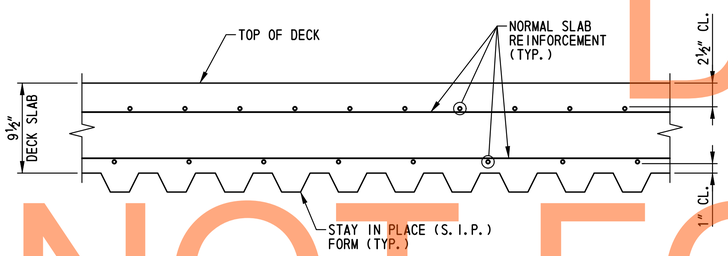

S.I.P. FORM PLACEMENT DETAIL

SCALE: 1½"=1'-0"

STAY IN PLACE FORM NOTES:

1. STAY IN PLACE FORMS SHALL CONFORM TO 602.03.
2. NO WELDING OF STAY IN PLACE FORMS TO TENSION FLANGES IS PERMITTED.
3. STAY IN PLACE FORMS SHALL BE VERTICALLY ADJUSTED TO ATTAIN FINISHED LINES AND GRADES REQUIRED ON THE PLANS.
4. ANY PERMANENTLY EXPOSED FORM METAL WHERE THE GALVANIZED COATING HAS BEEN DAMAGED SHALL BE THOROUGHLY CLEANED, WIRE BRUSHED, AND PAINTED WITH TWO COATS OF ZINC-OXIDE DUST PRIMER, FEDERAL SPECIFICATION TT-P-641D, TYPE II, NO COLOR ADDED, TO THE SATISFACTION OF THE ENGINEER. MINOR HEAT DISCOLORATION IN AREAS OF WELDS NEED NOT BE TOUCHED UP.

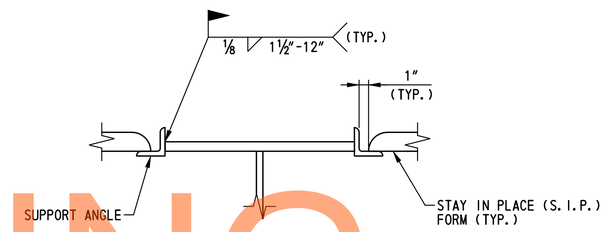

COMPRESSION FLANGE S.I.P. FORM ATTACHMENT DETAIL

SCALE: 1½"=1'-0"

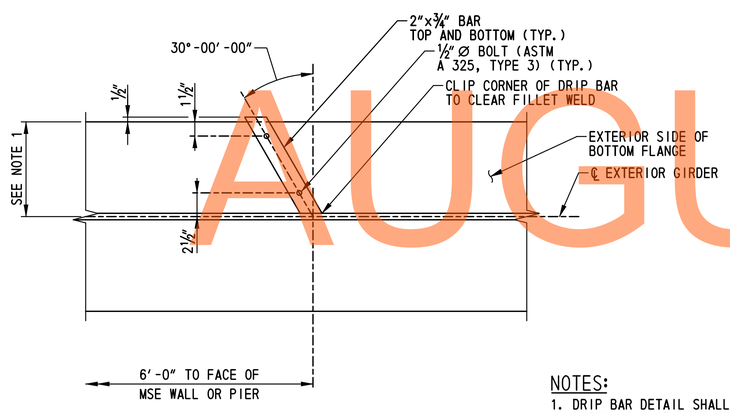

DRIP BAR DETAIL

SCALE: 1½"=1'-0"

NOTES:

1. DRIP BAR DETAIL SHALL BE PLACED ON BOTTOM FLANGE. PROVIDE DRIP BAR FOR EXTERIOR FACE OF GIRDER NOS. 1 AND 5 ONLY.
2. DRIP BARS ARE PLACED ADJACENT TO SUPPORTS TO PREVENT WATER FLOW ONTO SUPPORT.
3. DRIP BARS SHALL BE CAULKED AGAINST FLANGE, WEB AND FILLET WELD WITH AN APPROVED NONHARDENING CAULKING COMPOUND.

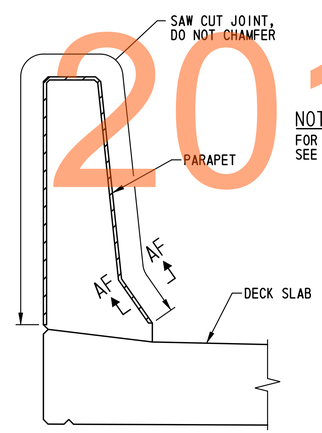

PARAPET CONTROL JOINT DETAIL

SCALE: 1"=1'-0"

NOTE:

FOR PARAPET CONTROL JOINT LOCATIONS, SEE DWG. NOS. PE-01 AND PE-02.

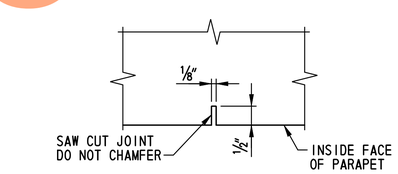

SECTION AF-AF

NOT TO SCALE

DRAFT
NOT FOR BIDDING
AUGUST 2015

N:\31653-000\Contract 1B\CADD\Bridge\Br_No433\S001_br1-433.dgn
2/5/2013 11:02:50 AM

DELAWARE DEPARTMENT OF TRANSPORTATION	ADDENDUMS / REVISIONS	SCALE: AS SHOWN	US 301 & SR 1 INTERCHANGE	CONTRACT T200911302	BRIDGE NO. 1-433	SUPERSTRUCTURE DETAILS	BR1-3 SD-01
				COUNTY NEW CASTLE	DESIGNED BY: W.T.R.		SHEET NO. 274
					CHECKED BY: B.K.B.		TOTAL SHTS. 491

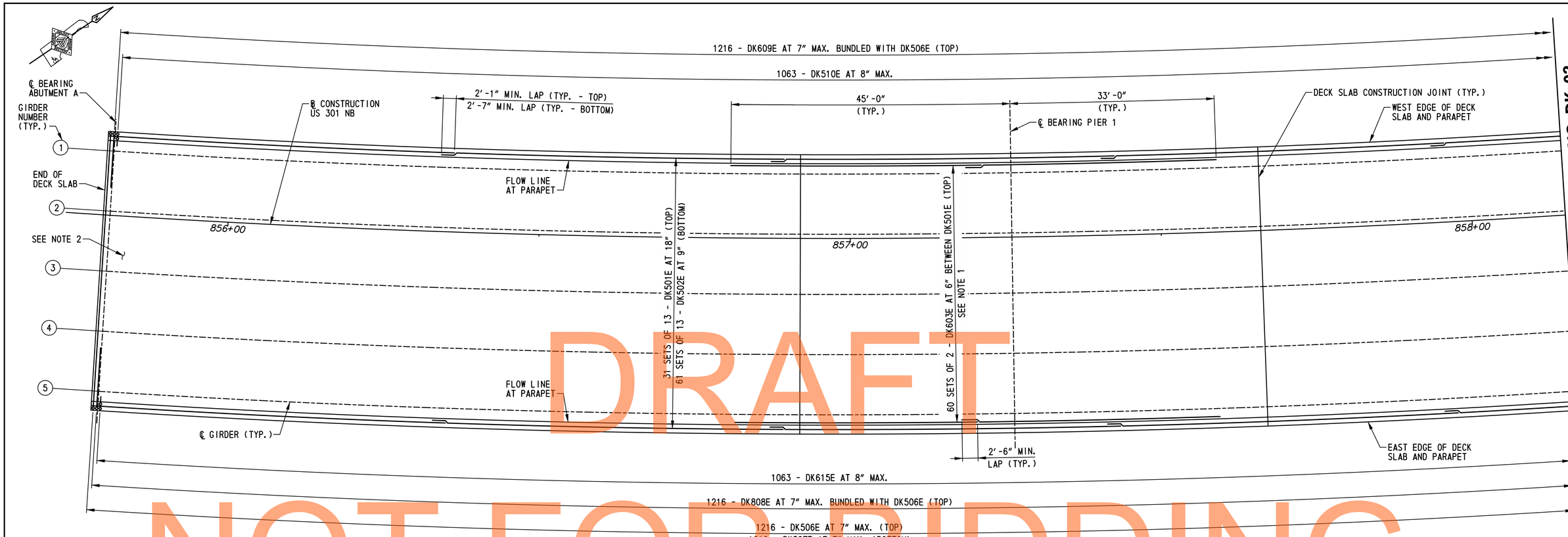

DECK SLAB REINFORCEMENT PLAN
SCALE: 1/8"=1'-0"

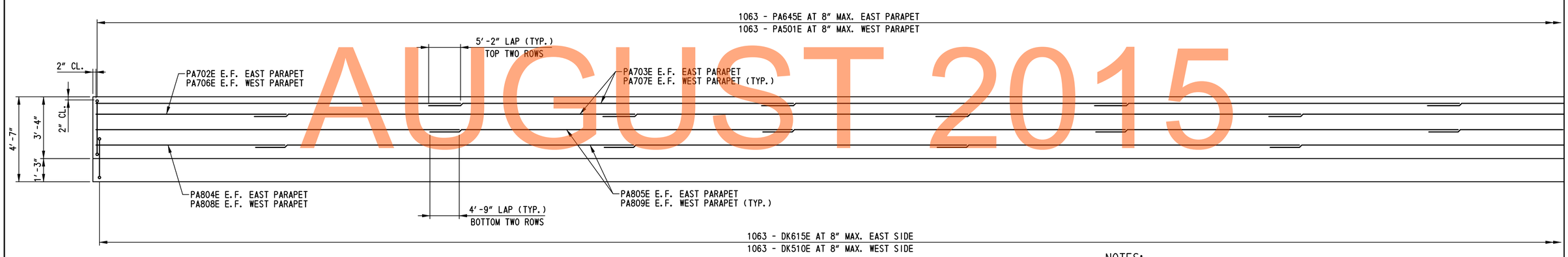

NOTE:
EAST PARAPET SHOWN LOOKING WEST.
WEST PARAPET SIMILAR LOOKING EAST.

PARAPET REINFORCEMENT ELEVATION
HORIZONTAL SCALE: 1/8"=1'-0"
VERTICAL SCALE: 3/8"=1'-0"

NOTES:
1. FOR ADDITIONAL INFORMATION ON PLACEMENT OF S501E AND S603E, SEE DECK SLAB TYPICAL REINFORCEMENT SECTION ON DWG. NO. DK-04.
2. FOR ADDITIONAL REINFORCEMENT IN END HAUNCH, SEE DWG. NO. DK-04.
3. FOR ADDITIONAL DECK SLAB AND PARAPET REINFORCEMENT DETAILS, SEE DWG. NO. DK-04.
4. FOR DECK SLAB CONSTRUCTION JOINT LOCATIONS AND DECK SLAB POURING SEQUENCE, SEE DWG. NO. PS-01.
5. PARAPET CONTROL JOINTS NOT SHOWN FOR CLARITY. FOR PARAPET CONTROL JOINT LOCATIONS, SEE DWG. NOS. PE-01 AND PE-02. FOR PARAPET CONTROL JOINT DETAILS, SEE DWG. NO. SD-01.

MATCH LINE STA. 858+15.00 – SEE DWG. NO. DK-02

MATCH LINE STA. 858+15.00 – SEE DWG. NO. DK-02

DRAFT
NOT FOR BIDDING
AUGUST 2015

DELAWARE DEPARTMENT OF TRANSPORTATION	ADDENDUMS / REVISIONS	SCALE: AS NOTED	US 301 & SR 1 INTERCHANGE	CONTRACT T200911302	BRIDGE NO. 1-433	DECK SLAB AND PARAPET REINFORCEMENT – 1
				COUNTY NEW CASTLE	DESIGNED BY: B.K.B.	SHEET NO. 275
					CHECKED BY: W.A.G.	TOTAL SHTS. 491

BR1-3
DK-01

N:\31653-000\Contract 1B\CADD\Bridge\Br_No433\DK01_br1-433.dgn
2/5/2015 11:05:16 AM

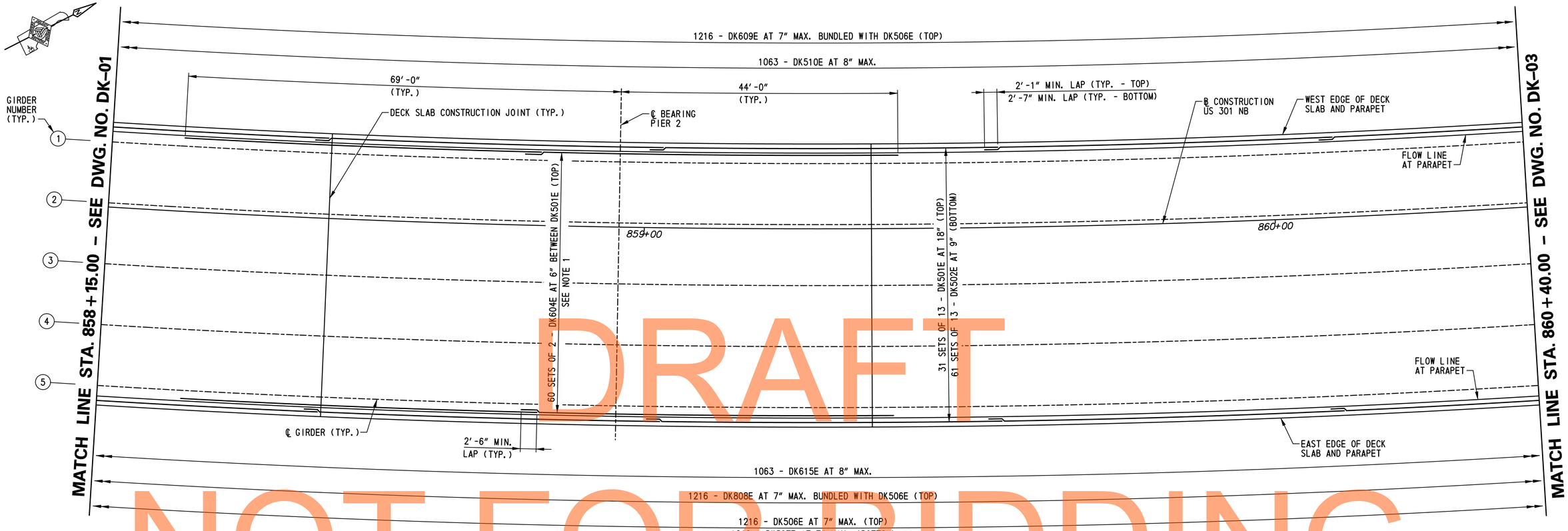

DECK SLAB REINFORCEMENT PLAN

SCALE: 1/8"=1'-0"

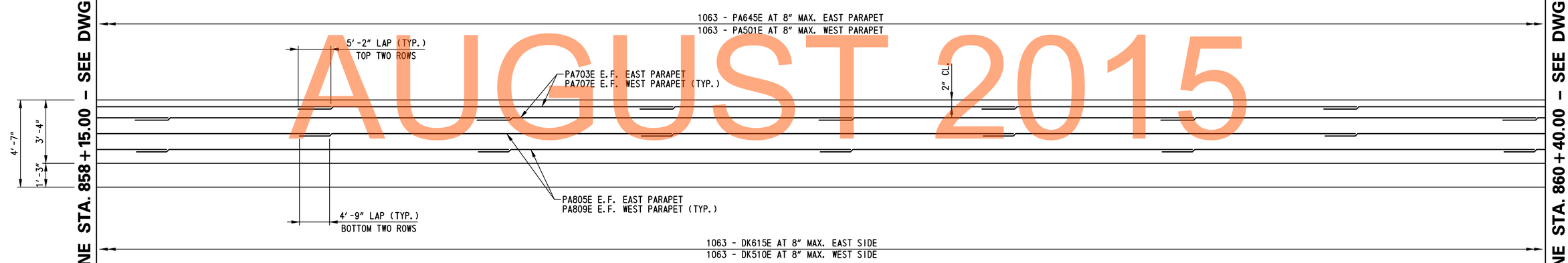

PARAPET REINFORCEMENT ELEVATION

HORIZONTAL SCALE: 1/8"=1'-0"
VERTICAL SCALE: 3/8"=1'-0"

NOTE:

EAST PARAPET SHOWN LOOKING WEST.
WEST PARAPET SIMILAR LOOKING EAST.

NOTES:

1. FOR ADDITIONAL INFORMATION ON PLACEMENT OF S501E AND S604E, SEE DECK SLAB TYPICAL REINFORCEMENT SECTION ON DWG. NO. DK-04.
2. FOR ADDITIONAL DECK SLAB AND PARAPET REINFORCEMENT DETAILS, SEE DWG. NO. DK-04.
3. FOR DECK SLAB CONSTRUCTION JOINT LOCATIONS AND DECK SLAB POURING SEQUENCE, SEE DWG. NO. PS-01.
4. PARAPET CONTROL JOINTS NOT SHOWN FOR CLARITY. FOR PARAPET CONTROL JOINT LOCATIONS, SEE DWG. NOS. PE-01 AND PE-02. FOR PARAPET CONTROL JOINT DETAILS, SEE DWG. NO. SD-01.

DRAFT
NOT FOR BIDDING
AUGUST 2015

BR1-3
DK-02

DELAWARE DEPARTMENT OF TRANSPORTATION

ADDENDUMS / REVISIONS

SCALE: AS NOTED

US 301 & SR 1 INTERCHANGE

CONTRACT	BRIDGE NO.	1-433
T200911302	DESIGNED BY: B.K.B.	
COUNTY		
NEW CASTLE	CHECKED BY: W.A.G.	

DECK SLAB AND PARAPET REINFORCEMENT - 2

SHEET NO. 276
TOTAL SHTS. 491

N:\31653-000\Contract 1B\CADD\Bridge\Br_No433\DK02_br1-433.dgn
2/5/2015 11:07:37 AM

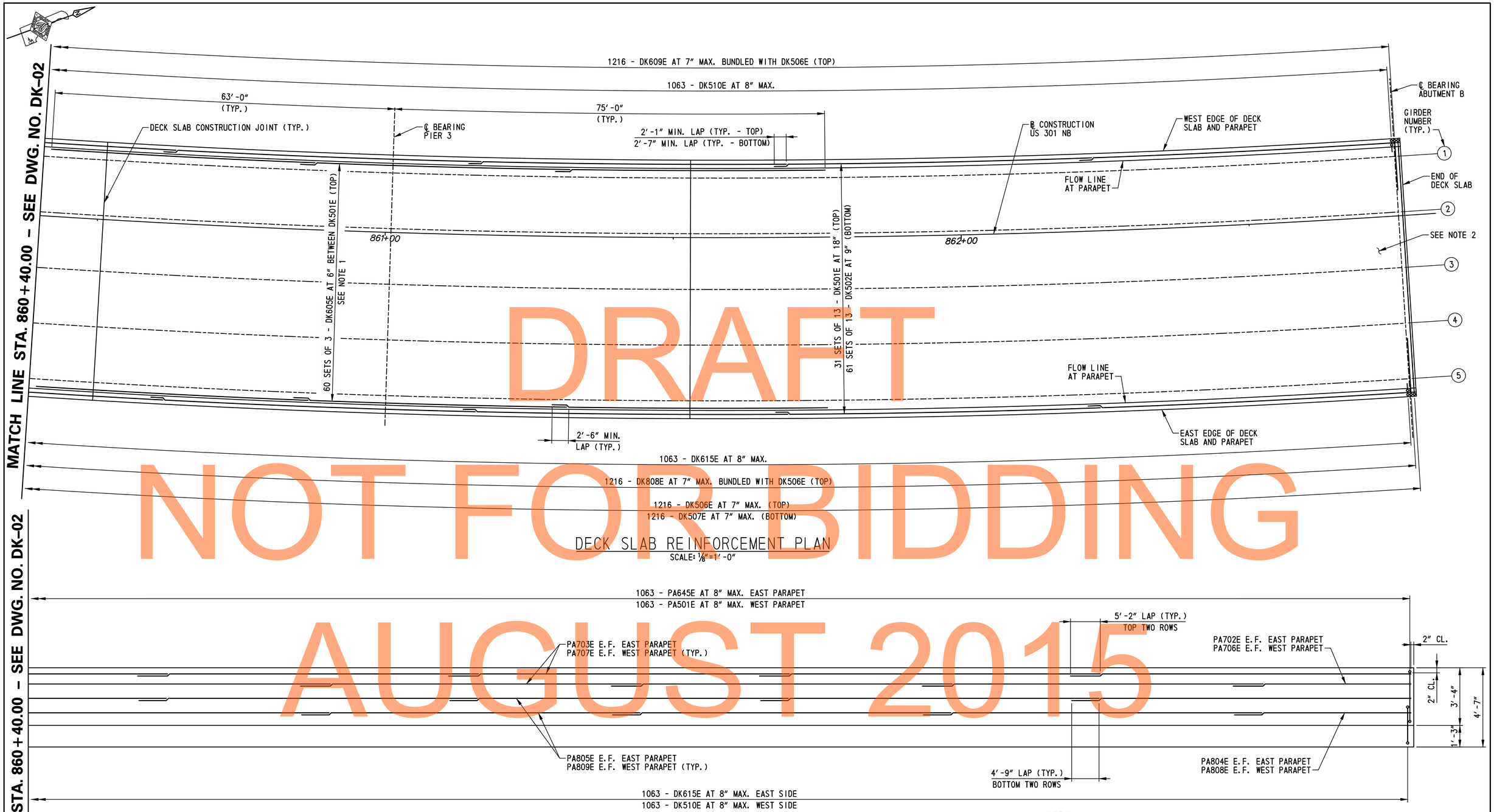

DRAFT
NOT FOR BIDDING
AUGUST 2015

DECK SLAB REINFORCEMENT PLAN

SCALE: 1/8"=1'-0"

PARAPET REINFORCEMENT ELEVATION

HORIZONTAL SCALE: 1/8"=1'-0"
VERTICAL SCALE: 3/8"=1'-0"

NOTE:
EAST PARAPET SHOWN LOOKING WEST.
WEST PARAPET SIMILAR LOOKING EAST.

NOTES:

1. FOR ADDITIONAL INFORMATION ON PLACEMENT OF S501E AND S605E, SEE DECK SLAB TYPICAL REINFORCEMENT SECTION ON DWG. NO. DK-04.
2. FOR ADDITIONAL REINFORCEMENT IN END HAUNCH, SEE DWG. NO. DK-04.
3. FOR ADDITIONAL DECK SLAB AND PARAPET REINFORCEMENT DETAILS, SEE DWG. NO. DK-04.
4. FOR DECK SLAB CONSTRUCTION JOINT LOCATIONS AND DECK SLAB POURING SEQUENCE, SEE DWG. NO. PS-01.
5. PARAPET CONTROL JOINTS NOT SHOWN FOR CLARITY. FOR PARAPET CONTROL JOINT LOCATIONS, SEE DWG. NOS. PE-01 AND PE-02. FOR PARAPET CONTROL JOINT DETAILS, SEE DWG. NO. SD-01.

BR1-3
DK-03

MATCH LINE STA. 860+40.00 - SEE DWG. NO. DK-02

N:\31653-000\Contract 1B\CADD\Bridge\Br_No433\DK03_br1-433.dgn
2/5/2015 11:08:22 AM

DELAWARE DEPARTMENT OF TRANSPORTATION	ADDENDUMS / REVISIONS	SCALE: AS SHOWN	US 301 & SR 1 INTERCHANGE	CONTRACT T200911302 / COUNTY NEW CASTLE	BRIDGE NO. 1-433 / DESIGNED BY: B.K.B. / CHECKED BY: W.A.G.
DECK SLAB AND PARAPET REINFORCEMENT - 3	SHEET NO. 277 / TOTAL SHTS. 491				

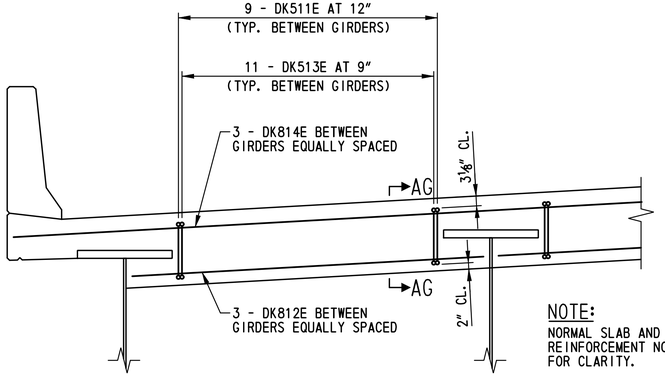

NOTE:
NORMAL SLAB AND PARAPET REINFORCEMENT NOT SHOWN FOR CLARITY.

CONCRETE END HAUNCH TYPICAL REINFORCEMENT SECTION
SCALE: ½"=1'-0"

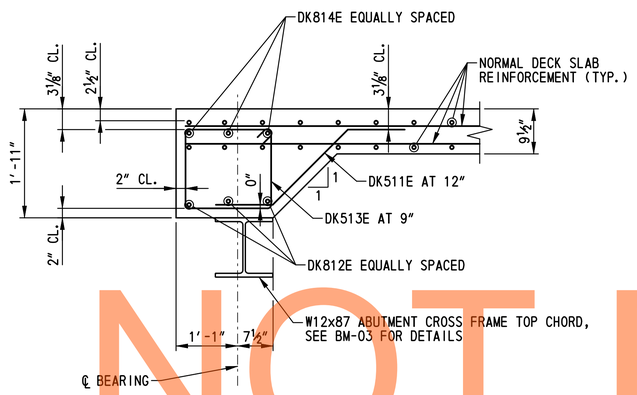

SECTION AG-AG
SCALE: ¾"=1'-0"

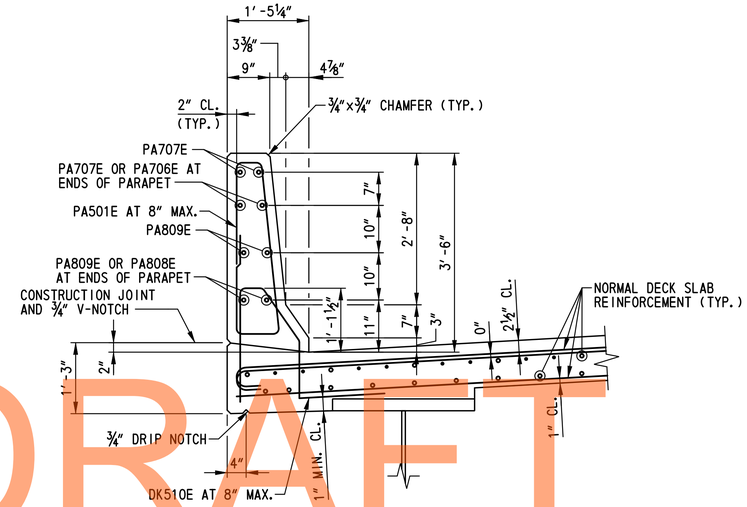

WEST PARAPET TYPICAL REINFORCEMENT SECTION
SCALE: ¾"=1'-0"

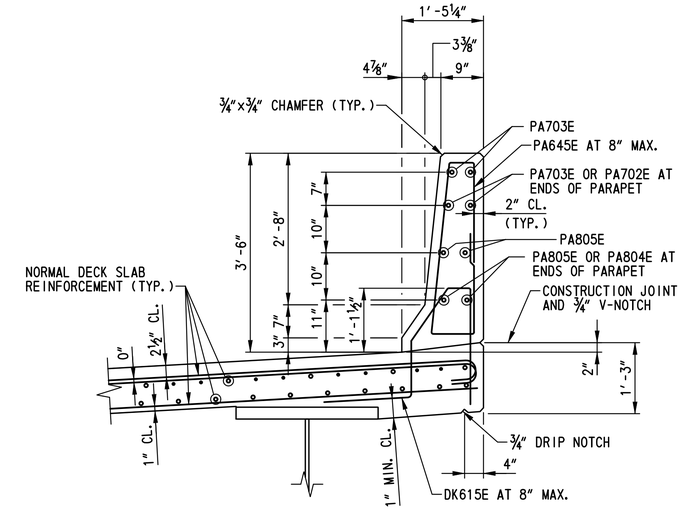

EAST PARAPET TYPICAL REINFORCEMENT SECTION
SCALE: ¾"=1'-0"

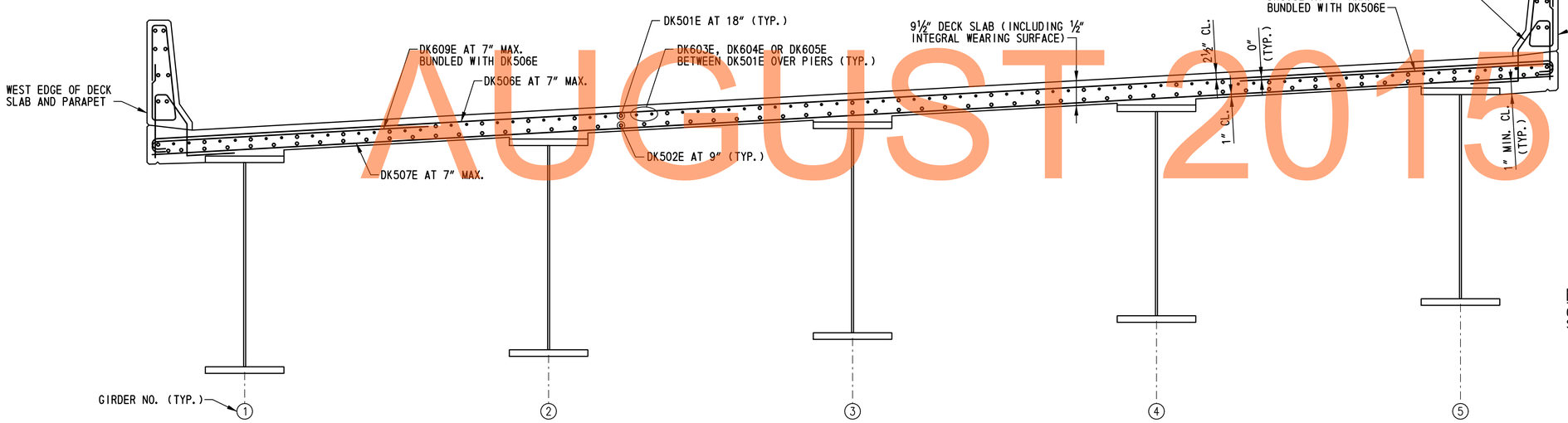

NOTE:
CROSS FRAMES AND SHEAR STUDS NOT SHOWN FOR CLARITY.

DECK SLAB TYPICAL REINFORCEMENT SECTION
SCALE: ½"=1'-0"

DRAFT
NOT FOR BIDDING
AUGUST 2015

N:\31653-000\Contract 1B\CADD\Bridge\Br_No433\DK04_br1-433.dgn
2/5/2015 11:09:21 AM

DELAWARE DEPARTMENT OF TRANSPORTATION	ADDENDUMS / REVISIONS	SCALE: AS SHOWN	US 301 & SR 1 INTERCHANGE	CONTRACT T200911302	BRIDGE NO. 1-433	DECK SLAB AND PARAPET REINFORCEMENT DETAILS	BR1-3 DK-04
				COUNTY NEW CASTLE	DESIGNED BY: B.K.B.		SHEET NO. 278
					CHECKED BY: W.A.G.		TOTAL SHTS. 491

① ANY MARK NUMBER WITH SUFFIX 'E' DENOTES EPOXY COATED REINFORCING STEEL.

② ALL MARK 'LOCATION PREFIXES' SHALL CONSIST OF TWO LETTERS AND ARE AS FOLLOWS: AB = ABUTMENT, AS = APPROACH SLAB, BC = BOX CULVERT, BW = BACKWALL, CL = COLUMN, DK = DECK, DL = DOWEL, FT = FOOTING, HW = HEADWALL, MS = MISC. BARS, PA = PARAPET, PR = PIER, SC = SHEETPILE CAP, SL = SLAB, TW = TOEWALL, WL = WALL (UNIQUE LOCATION), WW = WINGWALL

SPECIFICATIONS					BENDING DIMENSIONS (FEET-INCHES /QUARTER INCH)										
QTY.	SIZE	LENGTH	MARK	TYPE	A	B	C	D	E	F/R	G	H	J	K	O
DECK SLAB															
403	5	56-05 1	DK501E	STR		56-05 1									
793	5	56-10 3	DK502E	STR		56-10 3									
120	6	40-03 0	DK603E	STR		40-03 0									
120	6	57-09 0	DK604E	STR		57-09 0									
180	6	47-08 0	DK605E	STR		47-08 0									
1216	5	45-08 2	DK506E	1	0-07 0	44-06 2					0-07 0		0-05 0		
1216	5	44-06 2	DK507E	STR		44-06 2									
1216	8	10-10 1	DK808E	1	0-11 0	9-11 1							0-08 0		
1216	6	9-05 1	DK609E	1	0-08 0	8-09 1							0-06 0		
1063	5	5-06 2	DK510E	T15		2-00 0	0-05 1	1-01 1	1-00 0	1-00 0		1-00 0	0-07 1	0-11 0	1-00 2
72	5	3-11 0	DK511E	6		1-00 0	1-11 0	1-00 0				1-04 1		1-04 1	3-04 1
24	8	9-04 0	DK812E	STR		9-04 0									
88	5	6-11 2	DK513E	T1	0-05 2	1-06 2	1-05 3	1-06 2	1-05 3		0-05 2				
6	8	44-06 2	DK814E	STR		44-06 2									
1063	6	5-06 2	DK615E	T15		2-00 0	0-05 1	1-01 1	1-00 0	1-00 0		1-00 0	0-07 1	0-11 0	1-00 2
1063	5	9-03 1	PA501E	PA		2-06 2	0-09 0	3-00 1	0-05 0	2-06 2		3-00 0		0-04 0	
4	7	32-02 3	PA702E	STR		32-02 3									
50	7	59-03 2	PA703E	STR		59-03 2									
4	8	31-10 0	PA804E	STR		31-10 0									
50	8	58-10 3	PA805E	STR		58-10 3									
4	7	31-07 0	PA706E	STR		31-07 0									
50	7	58-00 0	PA707E	STR		58-00 0									
4	8	31-02 1	PA808E	STR		31-02 1									
50	8	57-07 2	PA809E	STR		57-07 2									
1063	6	9-08 1	PA645E	PA		2-09 0	0-09 0	3-00 1	0-05 0	2-09 0		3-00 0		0-04 0	

SPECIFICATIONS					BENDING DIMENSIONS (FEET-INCHES /QUARTER INCH)										
QTY.	SIZE	LENGTH	MARK	TYPE	A	B	C	D	E	F/R	G	H	J	K	O

SPECIFICATIONS					BENDING DIMENSIONS (FEET-INCHES /QUARTER INCH)										
QTY.	SIZE	LENGTH	MARK	TYPE	A	B	C	D	E	F/R	G	H	J	K	O

DRAFT
NOT FOR BIDDING
AUGUST 2015

ASTM STANDARD ENGLISH REINFORCING BARS				RECOMMENDED END HOOKS, APPLICABLE TO ALL GRADES				STIRRUP AND TIE HOOKS, APPLICABLE TO ALL GRADES			
	NOMINAL DIMENSIONS				180° HOOKS		90° HOOKS		90° HOOK	135° HOOK	
BAR SIZE	DIAMETER (INCHES)	AREA (INCHES²)	WEIGHT (LBS./FT.)	D	A OR G	J	A OR G	D	A OR G	A OR G	H
3	0.375	0.110	0.376	2¼"	5"	3"	6"	1½"	4"	4"	2½"
4	0.500	0.200	0.668	3"	6"	4"	8"	2"	4½"	4½"	3"
5	0.625	0.310	1.043	3¾"	7"	5"	10"	2½"	6"	5½"	3¾"
6	0.750	0.440	1.502	4½"	8"	6"	1-0"	4½"	1-0"	8"	4½"
7	0.875	0.600	2.044	5¼"	10"	7"	1-2"	5¼"	1-2"	9"	5¼"
8	1.000	0.790	2.670	6"	11"	8"	1-4"	6"	1-4"	10½"	6"
9	1.128	1.000	3.400	9½"	1-3"	11¾"	1-7"				
10	1.270	1.270	4.303	10¾"	1-5"	1-1¼"	1-10"				
11	1.410	1.560	5.313	1-0"	1-7"	1-2¾"	2-0"				
14	1.693	2.250	7.650	1-6¼"	2-3"	1-9¾"	2-7"				
18	2.257	4.000	13.600	2-0"	3-0"	2-4½"	3-5"				

NOTES:

1. FIGURES SHOWN IN CIRCLES REPRESENT BAR BEND TYPES.
2. STANDARD BAR BENDS INCLUDE ONLY THOSE TYPES BELOW, INDICATED AS SUCH.
3. ALL DIMENSIONS OUT-TO-OUT, EXCEPT "A" AND "G" ON STD. 180° AND 135° HOOKS.
4. "J" DIMENSIONS ON 180° HOOKS TO BE SHOWN ONLY WHERE NECESSARY TO RESTRICT HOOK SIZE, OTHERWISE STANDARD 'ACI' HOOKS ARE TO BE USED.
5. WHERE "J" IS NOT SHOWN, "J" WILL BE KEPT EQUAL TO OR LESS THAN "H" ON TYPES 3, 5 AND 22. WHERE "J" CAN EXCEED "H", IT SHALL BE SHOWN.
6. "H" DIMENSIONS OF STIRRUPS TO BE SHOWN AS NEEDED TO FIT WITHIN THE CONCRETE.
7. UNLESS OTHERWISE NOTED, DIAMETER "D" IS THE SAME FOR ALL BENDS AND HOOKS ON A BAR (EXCEPT FOR BEND TYPES 11 AND 13).
8. WHERE SLOPE DIFFERS FROM 45° OFFSET, "H" AND "K" MUST BE SHOWN.
9. WHERE BARS ARE TO BE BENT MORE ACCURATELY THAN STANDARD BENDING TOLERANCES, BENDING DIMENSIONS REQUIRING CLOSER FABRICATION SHOULD HAVE LIMITS INDICATED.
10. FOR RECOMMENDED DIAMETER "D", OF BENDS, HOOKS, ETC., REFER TO TABLE ABOVE, 'CRSI' OR 'ACI' TABLES WHERE APPLICABLE AND REQUIRED.
11. TYPE S1-S6, S11, T1-T3 AND T6-T9 APPLICABLE TO BAR SIZES #3 THROUGH #8.

STANDARD BAR BENDS

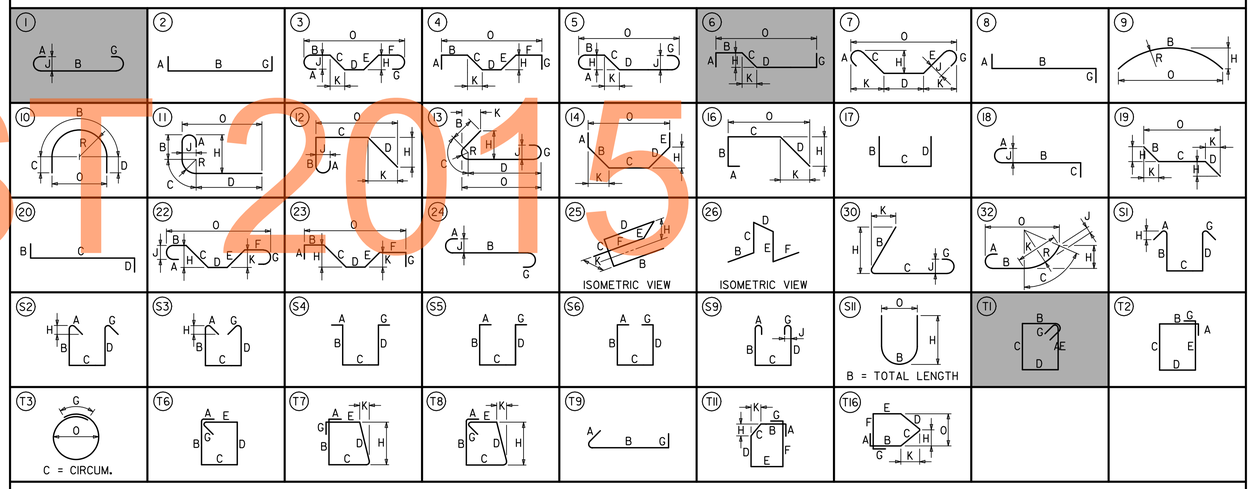

SPECIAL BAR BENDS

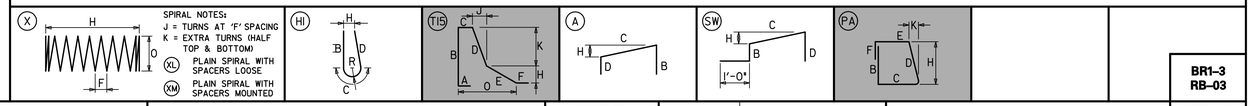

STIRRUP AND TIE HOOKS

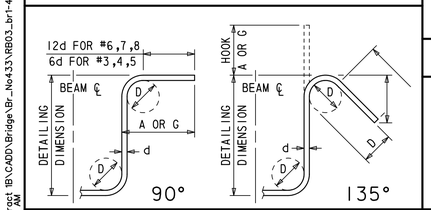

180° AND 90° END HOOKS

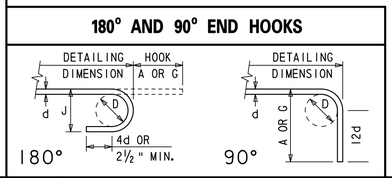

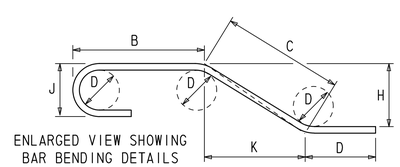

ADDENDUMS / REVISIONS	

NOT TO SCALE

US 301 & SR 1 INTERCHANGE

CONTRACT	BRIDGE NO. 1-433
T200911302	DESIGNED BY: W.T.R.
COUNTY	CHECKED BY: B.K.B.
NEW CASTLE	

SUPERSTRUCTURE REINFORCEMENT LIST

BR1-3
RB-03

SHEET NO. 279
TOTAL SHTS. 491

DELAWARE DEPARTMENT OF TRANSPORTATION

N:\31653-000\Contract T$\CADD\Bridge\Br_No433\RB03_br1-433.dgn
2/5/2013 11:10:10 AM

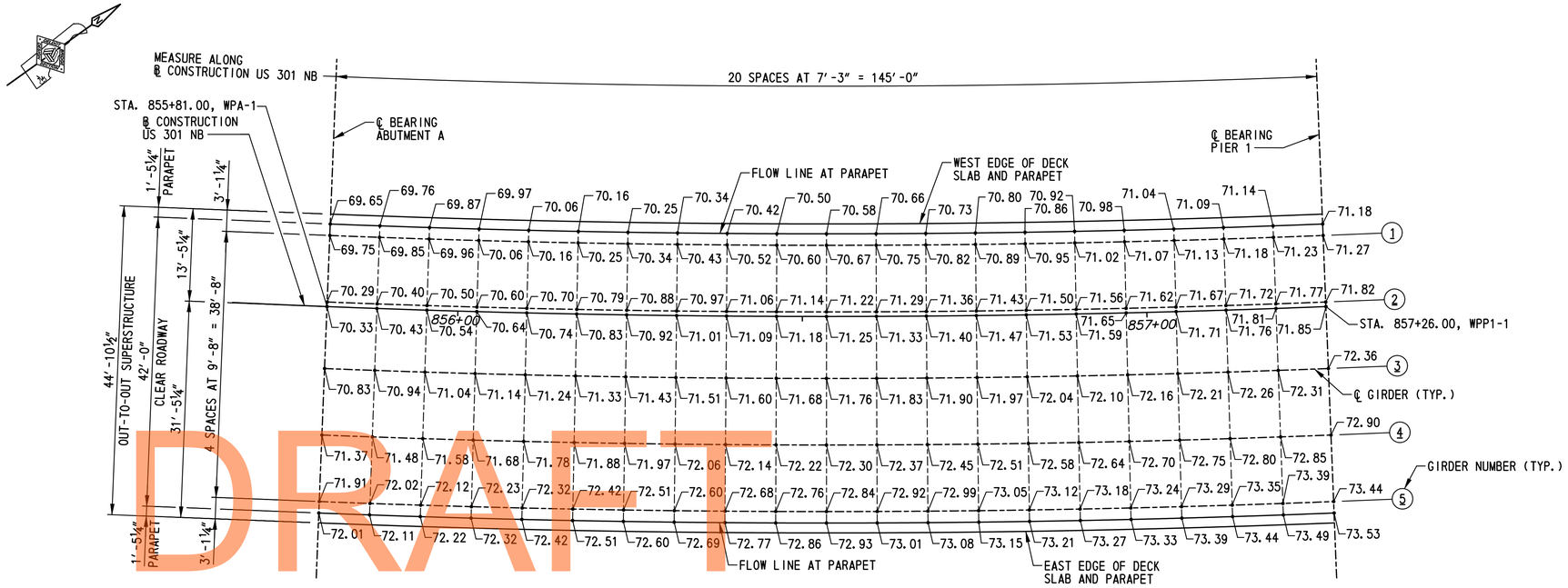

DRAFT

NOTES:

1. FINISHED ROADWAY ELEVATIONS SHOWN ARE TOP OF PROPOSED CONCRETE DECK SLAB.
2. FOR VERTICAL CURVE DATA, SEE DWG. NO. PE-02.
3. ALL LINES OF ELEVATIONS SHOWN ARE RADIAL TO ℄ CONSTRUCTION.

FINISHED ROADWAY ELEVATIONS - SPAN 1

SCALE: 1"=10'-0"

NOT FOR BIDDING

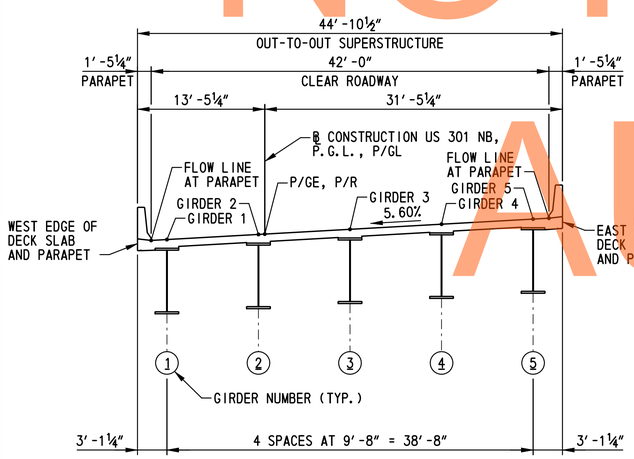

LOCATION OF FINISHED ROADWAY ELEVATIONS

SCALE: ⅛"=1'-0"

NOTE:

ALL DIMENSIONS SHOWN MEASURED RADIAL TO ℄ CONSTRUCTION US 301 NB.

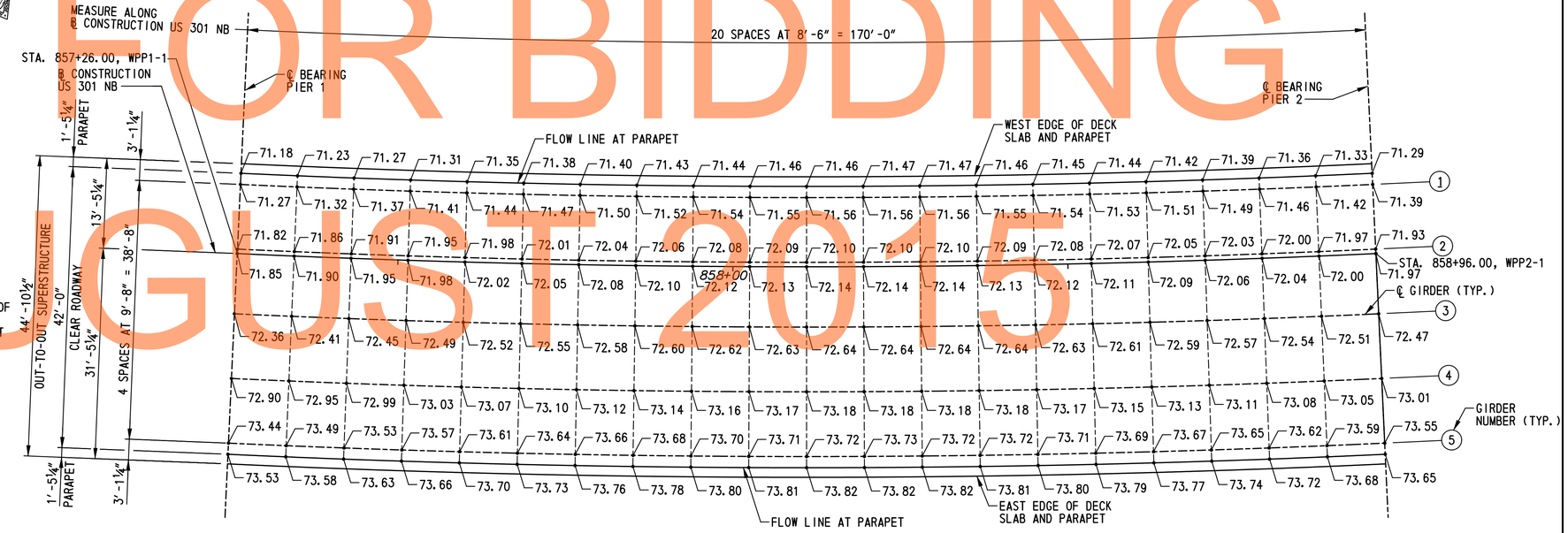

FINISHED ROADWAY ELEVATIONS - SPAN 2

SCALE: 1"=10'-0"

AUGUST 2015

DELAWARE DEPARTMENT OF TRANSPORTATION	ADDENDUMS / REVISIONS	SCALE: AS SHOWN	US 301 & SR 1 INTERCHANGE	CONTRACT T200911302	BRIDGE NO. 1-433	FINISHED ROADWAY ELEVATIONS – 1	BR1-3 RE-01
				COUNTY NEW CASTLE	DESIGNED BY: B.K.B.		SHEET NO. 280
					CHECKED BY: W.A.G.		TOTAL SHTS. 491

N:\31653-000\Contract 1B\CADD\Bridge\Br_No433\RE01_br1-433.dgn
2/5/2013 11:10:59 AM

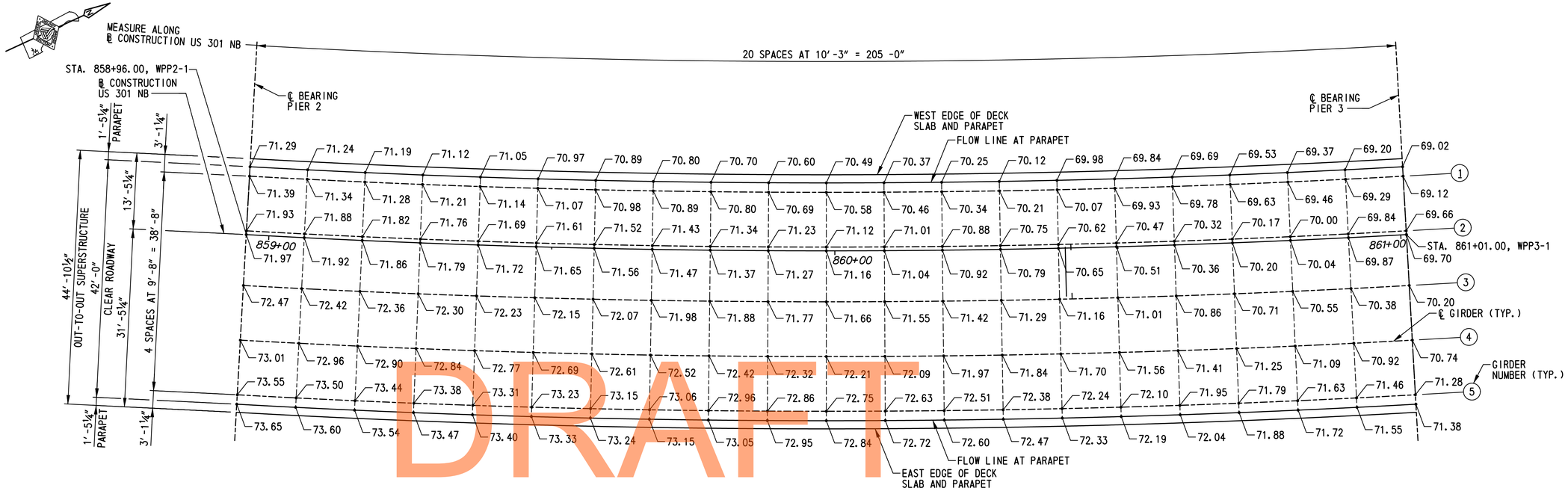

FINISHED ROADWAY ELEVATIONS - SPAN 3

SCALE: 1"=10'-0"

NOTES:

1. FINISHED ROADWAY ELEVATIONS SHOWN ARE TOP OF PROPOSED CONCRETE DECK SLAB.
2. FOR VERTICAL CURVE DATA, SEE DWG. NO. PE-02.
3. ALL LINES OF ELEVATIONS SHOWN ARE RADIAL TO ℄ CONSTRUCTION.

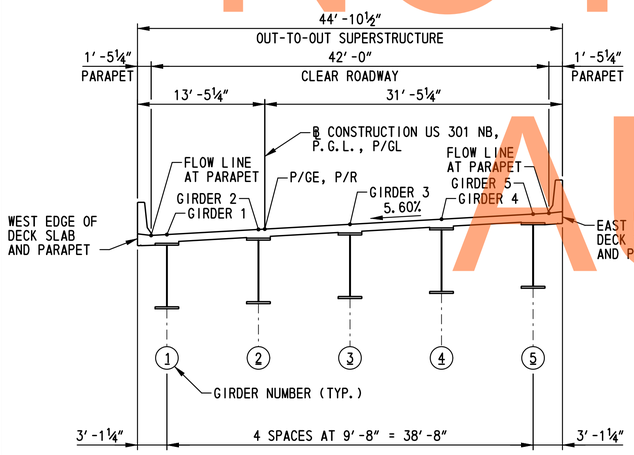

LOCATION OF FINISHED ROADWAY ELEVATIONS

SCALE: ⅛"=1'-0"

NOTE:

ALL DIMENSIONS SHOWN MEASURED RADIAL TO ℄ CONSTRUCTION US 301 NB.

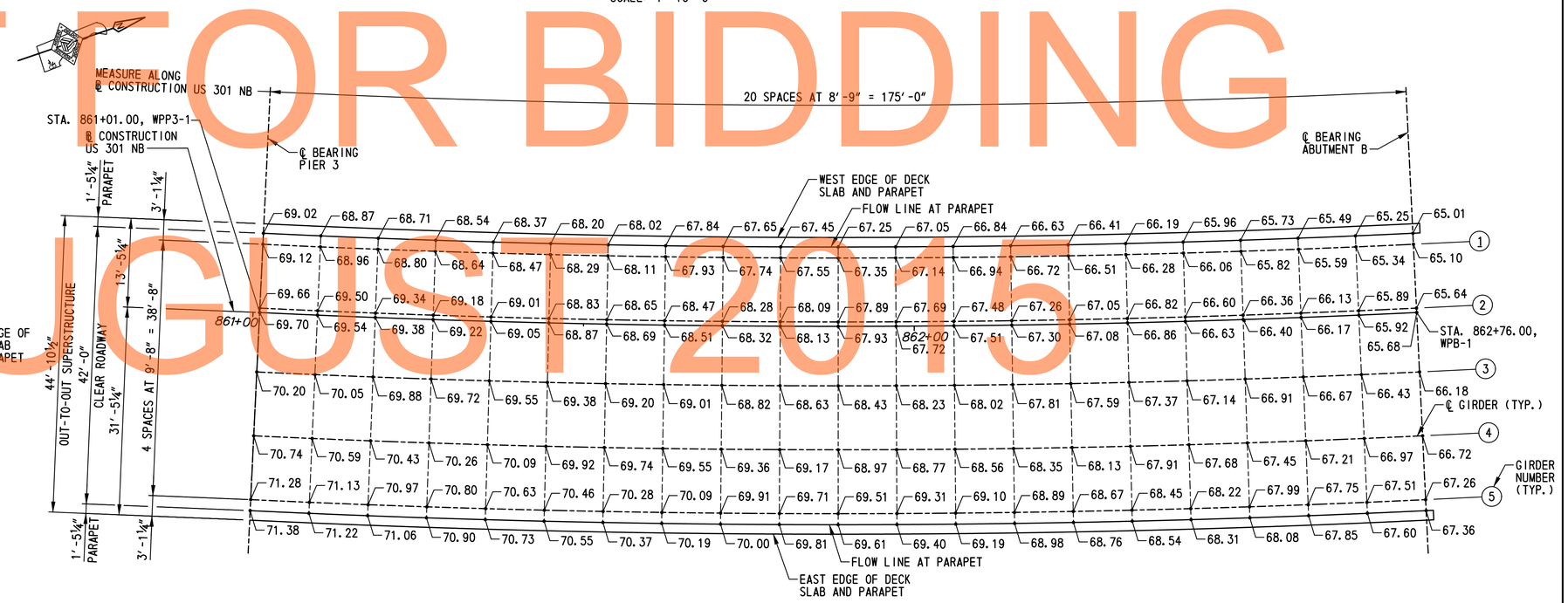

FINISHED ROADWAY ELEVATIONS - SPAN 4

SCALE: 1"=10'-0"

NOT FOR BIDDING
AUGUST 2015
DRAFT

DELAWARE DEPARTMENT OF TRANSPORTATION	ADDENDUMS / REVISIONS	SCALE: AS SHOWN	US 301 & SR 1 INTERCHANGE	CONTRACT T200911302	BRIDGE NO. 1-433	FINISHED ROADWAY ELEVATIONS – 2	BR1-3 RE-02
				COUNTY NEW CASTLE	DESIGNED BY: B.K.B.		SHEET NO. 281
					CHECKED BY: W.A.G.		TOTAL SHTS. 491

N:\31653-000\Contract 1B\CADD\Bridge\Br_No433\RE02_br1-433.dgn
2/5/2015 11:11:36 AM

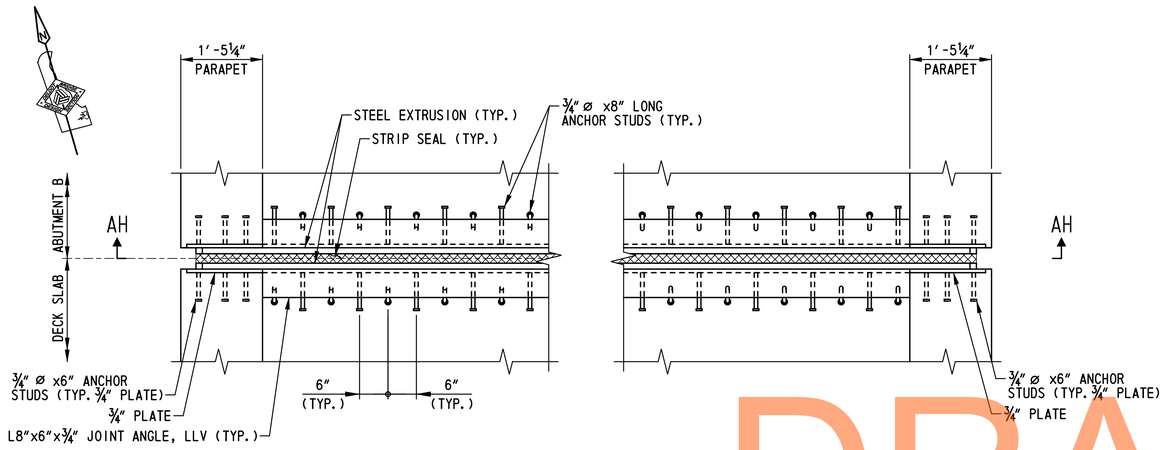

ARMORED STRIP SEAL JOINT PLAN

SCALE: ¾"=1'-0"

NOTE:
JOINT AT APPROACH SLAB B SHOWN.
JOINT AT APPROACH SLAB A SIMILAR.

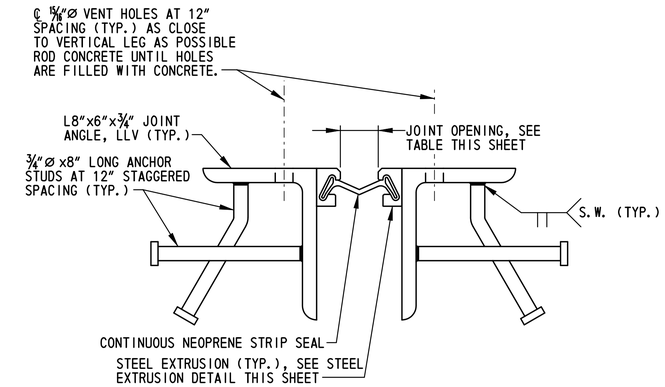

ARMORED STRIP SEAL JOINT ASSEMBLY DETAIL

SCALE: 3"=1'-0"

JOINT OPENING TABLE													
LOCATION	TEMPERATURE (°F)												
	0	10	20	30	40	50	60	70	80	90	100	110	120
ABUTMENT A	4"	3¾"	3½"	3¼"	3"	2¾"	2½"	2¼"	2"	1¾"	1½"	1¼"	1"
ABUTMENT B	4⅜"	4⅛"	3¾"	3⅞"	3⅛"	2⅝"	2½"	2⅜"	1⅞"	1⅝"	1¼"	⅝"	⅝"

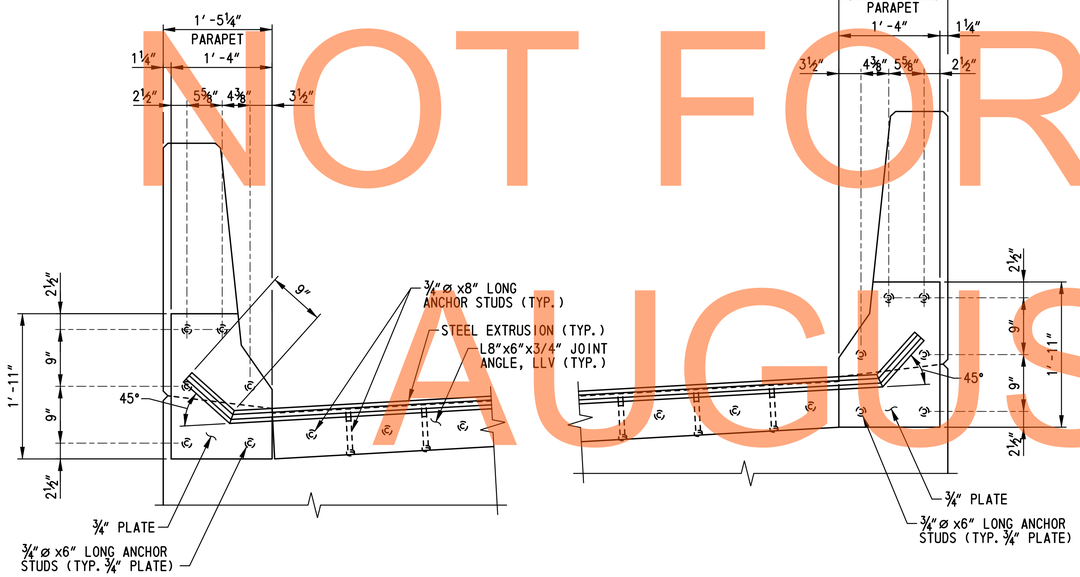

SECTION AH-AH

SCALE: 1"=1'-0"

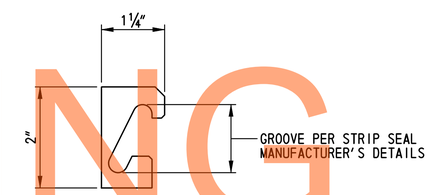

STEEL EXTRUSION DETAIL

NOT TO SCALE

NOTE:
PAYMENT FOR CONSTRUCTION OF THE ARMORED STRIP SEAL JOINT WILL BE MADE UNDER ITEM NO. 605512 - PREFABRICATED EXPANSION JOINT SYSTEM 4". SEE THE SPECIAL PROVISIONS FOR ADDITIONAL INFORMATION AND REQUIREMENTS.

DRAFT
NOT FOR BIDDING
AUGUST 2015

N:\33653-000\Contract 1B\CADD\Bridge\Br_No433\EX01_br1-433.dgn
2/5/2015 11:12:14 AM

DELAWARE DEPARTMENT OF TRANSPORTATION	ADDENDUMS / REVISIONS	SCALE: AS SHOWN	US 301 & SR 1 INTERCHANGE	CONTRACT T200911302	BRIDGE NO. 1-433	ARMORED STRIP SEAL JOINT DETAIL	BR1-3 EX-01
				COUNTY NEW CASTLE	DESIGNED BY: B.K.B.		SHEET NO. 282
					CHECKED BY: W.A.G.		TOTAL SHTS. 491

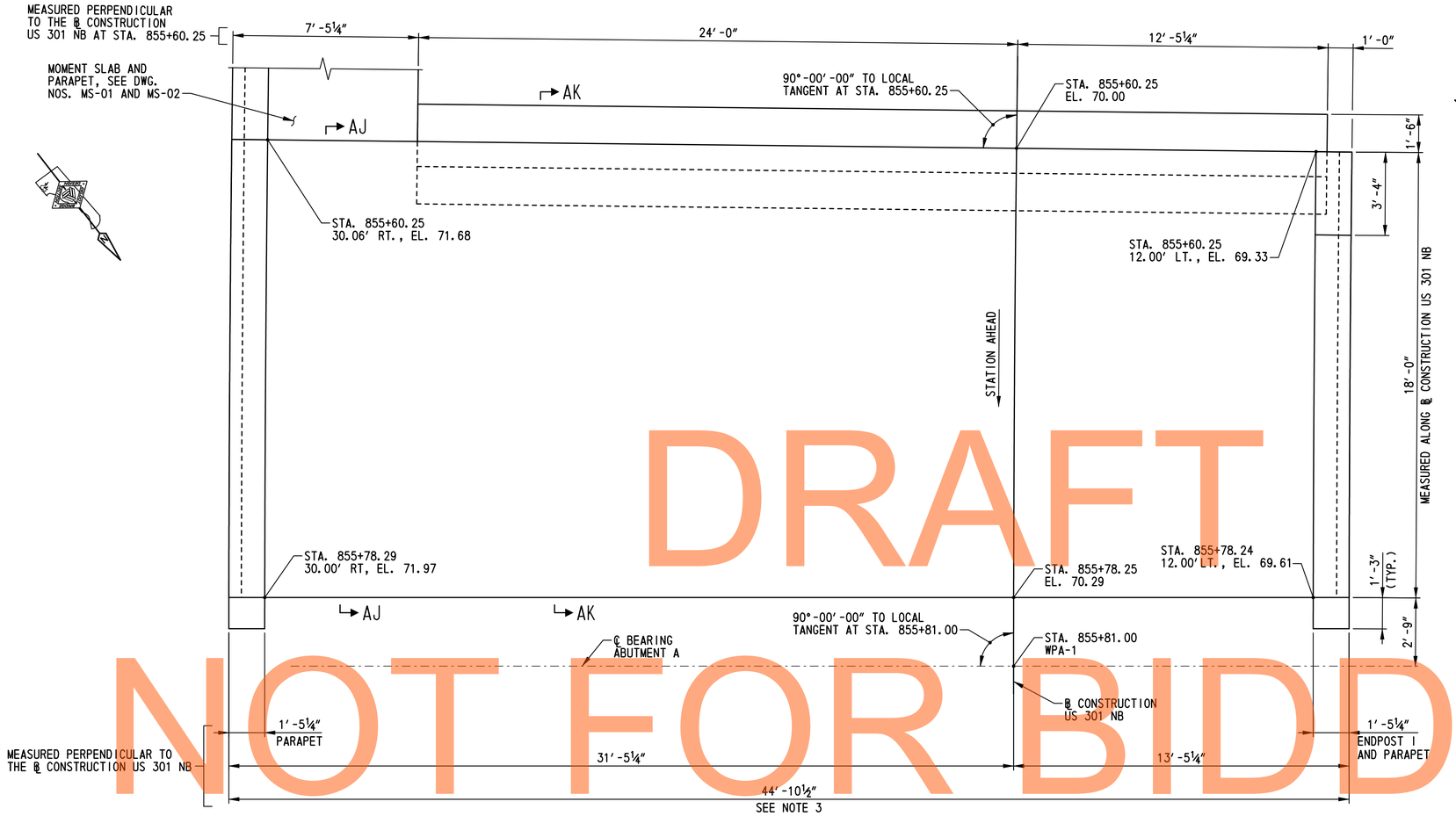

APPROACH SLAB A PLAN

SCALE: ⅜″=1′-0″

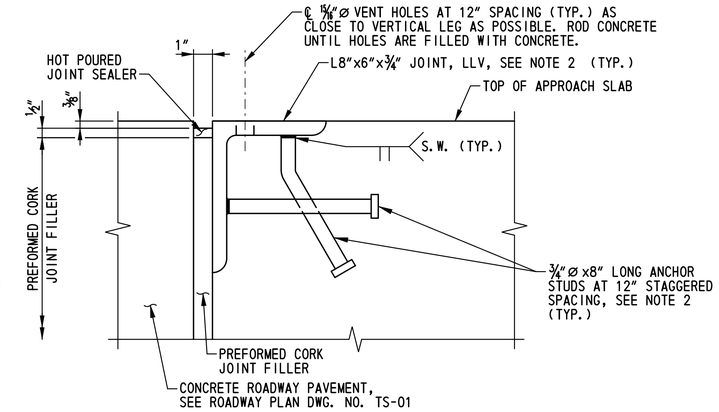

DETAIL F

SCALE: 3″=1′-0″

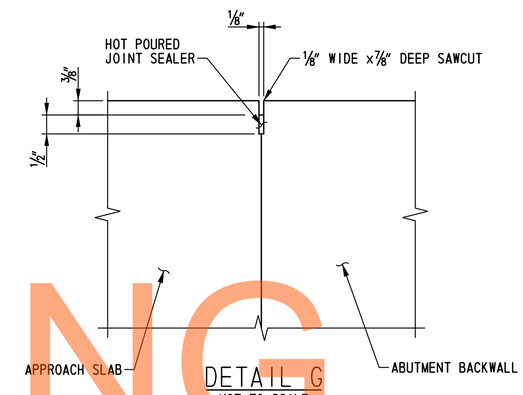

DETAIL G

NOT TO SCALE

NOTES:

1. FOR APPROACH SLAB A REINFORCEMENT, SEE DWG. NOS. AS-02 AND AS-05.
2. PAYMENT FOR INSTALLATION OF PREFORMED CORK JOINT FILLER, HOT POURED JOINT SEALER, ANGLES AND STUDS AT APPROACH PAVEMENT EDGE OF APPROACH SLAB AND HOT POURED JOINT SEALER BETWEEN APPROACH SLAB AND DECK SLAB SHALL BE INCIDENTAL TO ITEM NO. 602014 - PORTLAND CEMENT CONCRETE MASONRY, APPROACH SLAB, CLASS D.
3. RUMBLE STRIPS SHALL BE LOCATED IN THE APPROACH SLAB AT EACH SHOULDER. FOR LANE AND SHOULDER CONFIGURATION, SEE DWG. NO. TS-01. FOR RUMBLE STRIP DETAIL, SEE DWG. NO. DT-01.

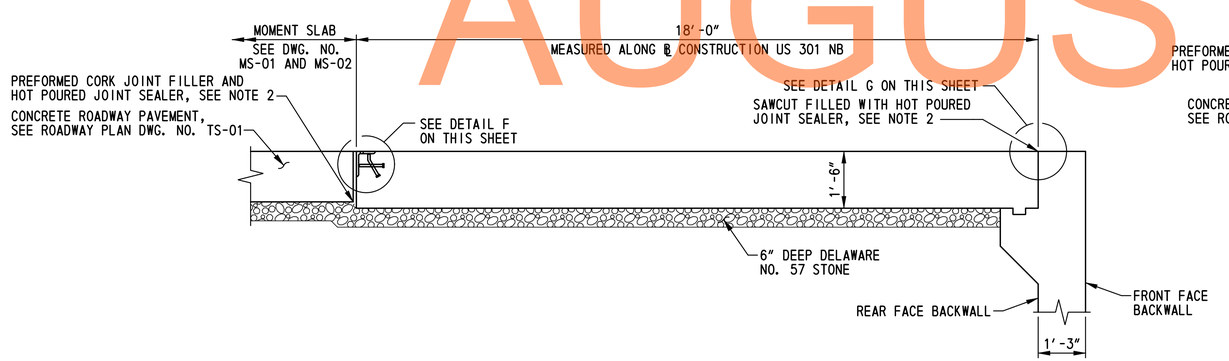

APPROACH SLAB A TYPICAL SECTION AJ-AJ

SCALE: ½″=1′-0″

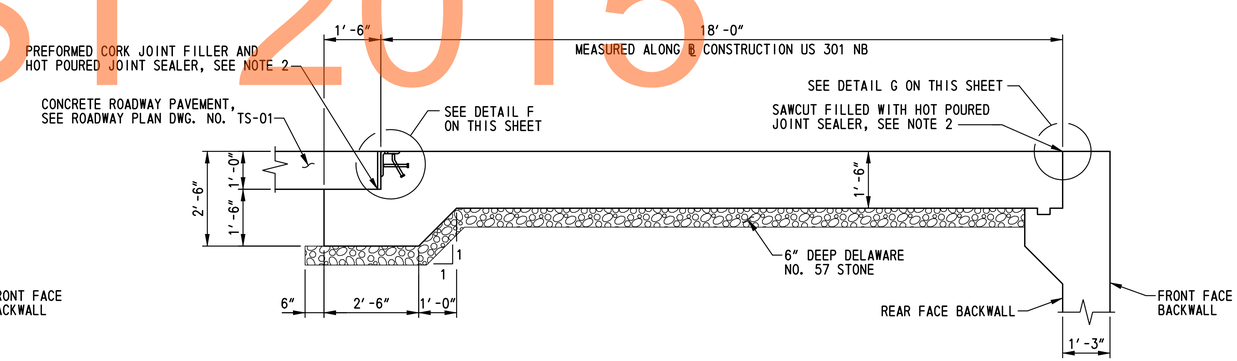

APPROACH SLAB A TYPICAL SECTION AK-AK

SCALE: ½″=1′-0″

DRAFT
NOT FOR BIDDING
AUGUST 2015

N:\31653-000\Contract 1B\CADD\Bridge\Br_No433\AS01_br1-433.dgn
2/5/2013 11:52:24 AM

DELAWARE DEPARTMENT OF TRANSPORTATION	ADDENDUMS / REVISIONS	SCALE: AS SHOWN	US 301 & SR 1 INTERCHANGE	CONTRACT T200911302	BRIDGE NO. 1-433	APPROACH SLAB A DETAILS - 1	BR1-3 AS-01
				COUNTY NEW CASTLE	DESIGNED BY: W.T.R.		SHEET NO. 283
					CHECKED BY: B.K.B.		TOTAL SHTS. 491

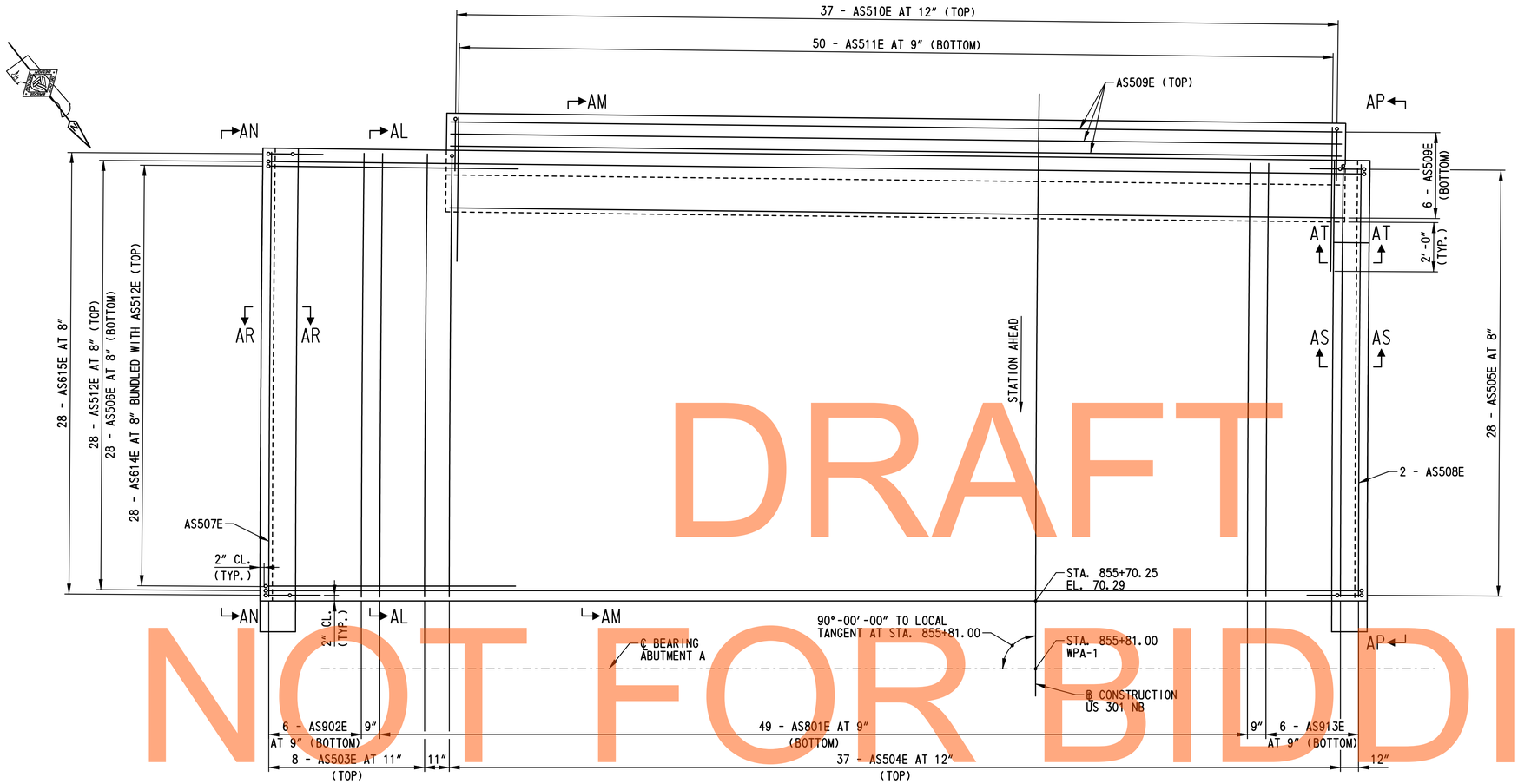

NOTE:
FOR VIEWS AN-AN AND AP-AP AND SECTIONS AR-AR, AS-AS AND AT-AT, SEE DWG. NO. AS-05.

APPROACH SLAB A REINFORCEMENT PLAN

SCALE: 3/8"=1'-0"

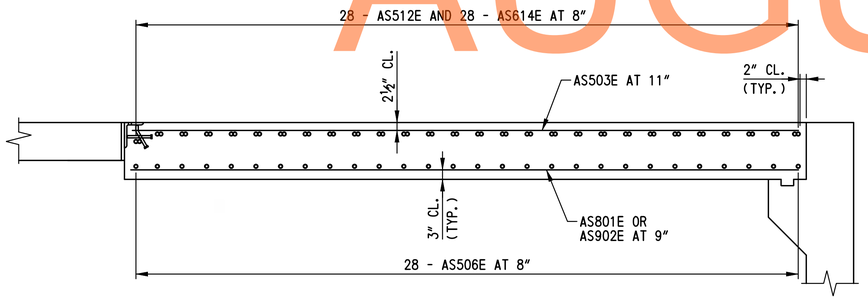

APPROACH SLAB A TYPICAL REINFORCEMENT SECTION AL-AL

SCALE: ½"=1'-0"

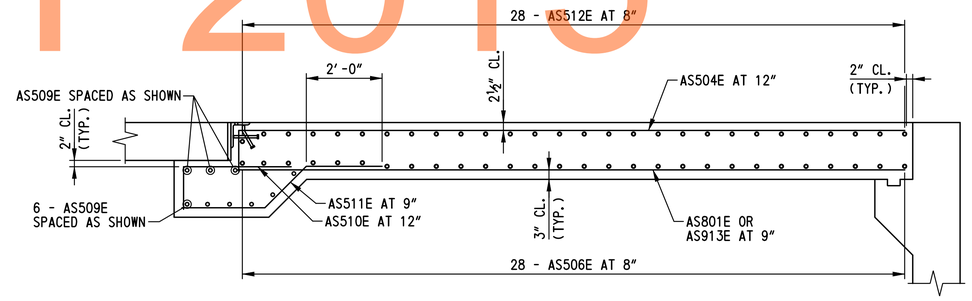

APPROACH SLAB A TYPICAL REINFORCEMENT SECTION AM-AM

SCALE: ½"=1'-0"

DRAFT
NOT FOR BIDDING
AUGUST 2015

N:\31653-000\Contract 1B\CADD\Bridge\Br_No433\AS02_br1-433.dgn
2/5/2013 11:15:46 AM

DELAWARE DEPARTMENT OF TRANSPORTATION	ADDENDUMS / REVISIONS	SCALE: AS SHOWN	US 301 & SR 1 INTERCHANGE	CONTRACT T200911302	BRIDGE NO. 1-433	APPROACH SLAB A DETAILS - 2	BR1-3 AS-02
				COUNTY NEW CASTLE	DESIGNED BY: W.T.R.		SHEET NO. 284
					CHECKED BY: B.K.B.		TOTAL SHTS. 491

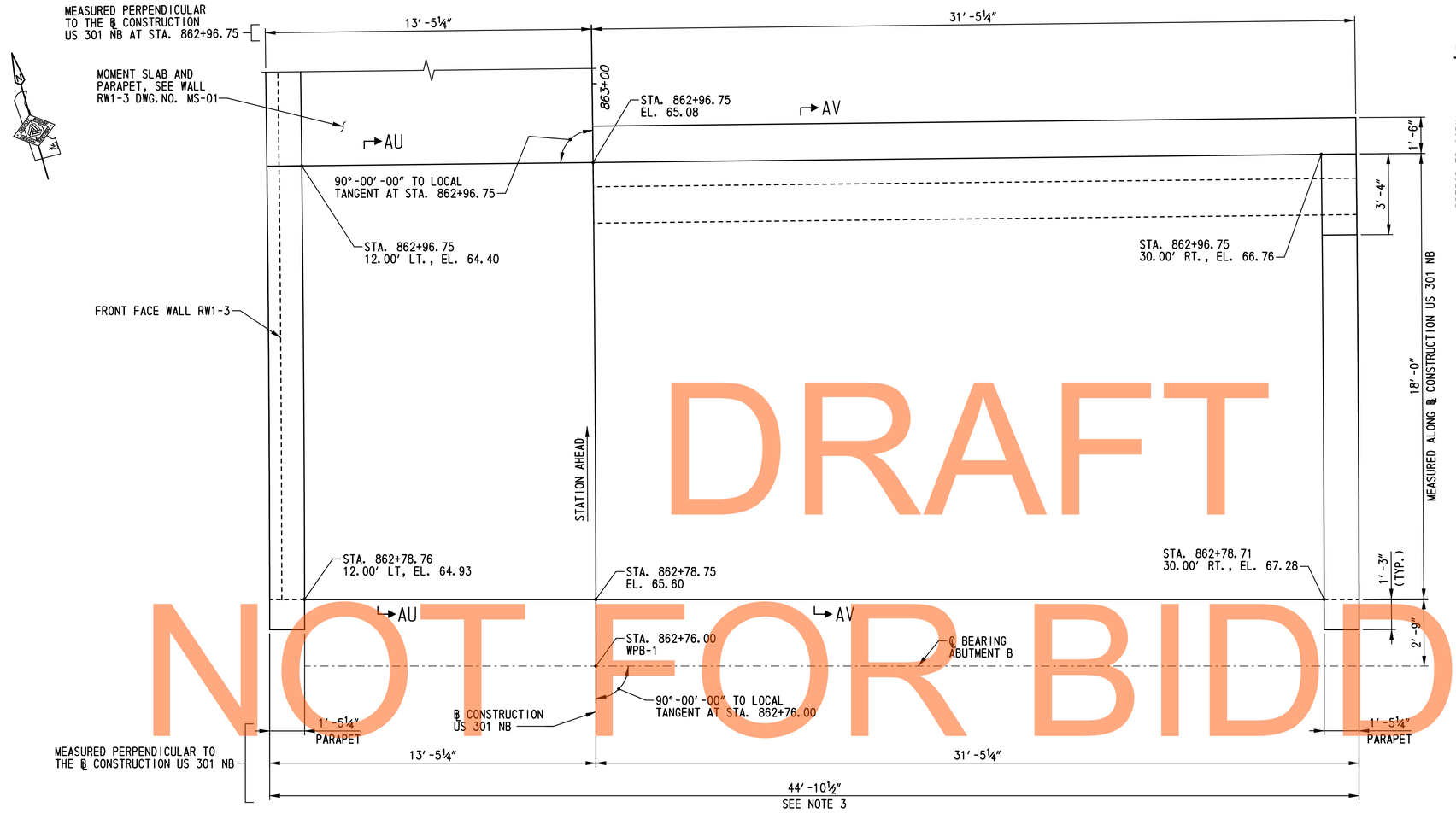

APPROACH SLAB B PLAN
SCALE: ⅜″=1′-0″

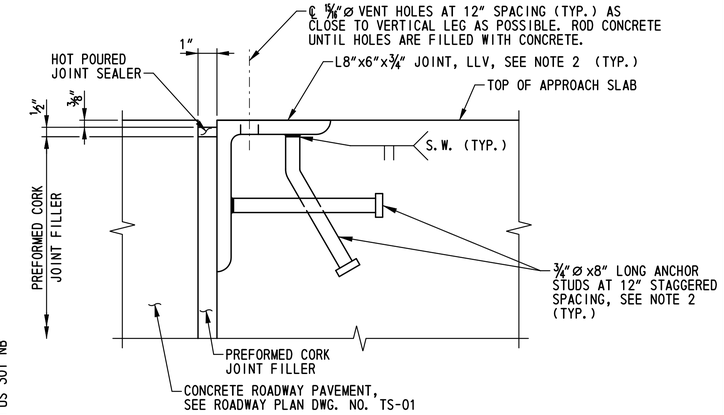

DETAIL H
SCALE: 3″=1′-0″

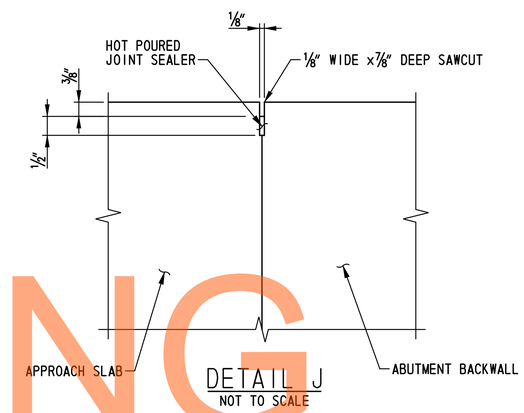

DETAIL J
NOT TO SCALE

NOTES:

1. FOR APPROACH SLAB B REINFORCEMENT, SEE DWG. NOS. AS-04 AND AS-05.
2. PAYMENT FOR INSTALLATION OF PREFORMED CORK JOINT FILLER, HOT POURED JOINT SEALER, ANGLES AND STUDS AT APPROACH PAVEMENT EDGE OF APPROACH SLAB AND HOT POURED JOINT SEALER BETWEEN APPROACH SLAB AND DECK SLAB SHALL BE INCIDENTAL TO ITEM NO. 602014 - PORTLAND CEMENT CONCRETE MASONRY, APPROACH SLAB, CLASS D.
3. RUMBLE STRIPS SHALL BE LOCATED IN THE APPROACH SLAB AT EACH SHOULDER. FOR LANE AND SHOULDER CONFIGURATION, SEE DWG. NO. TS-01. FOR RUMBLE STRIP DETAIL, SEE DWG. NO. DT-01.

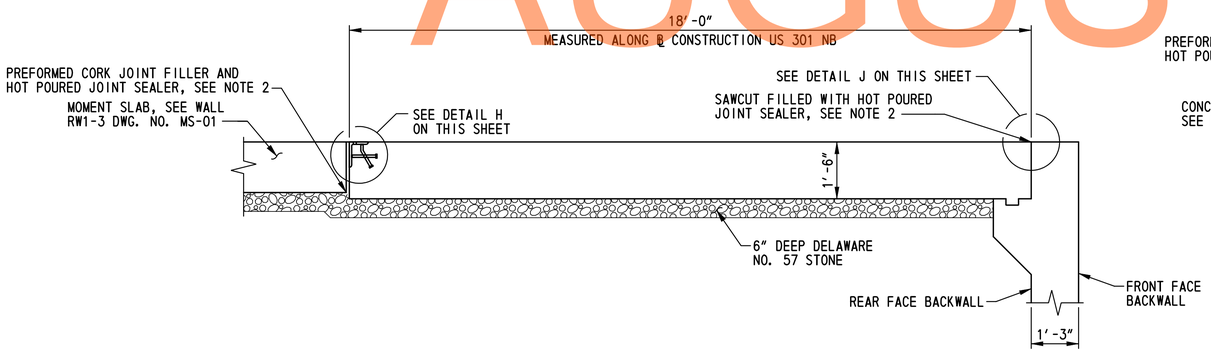

APPROACH SLAB B TYPICAL SECTION AU-AU
SCALE: ½″=1′-0″

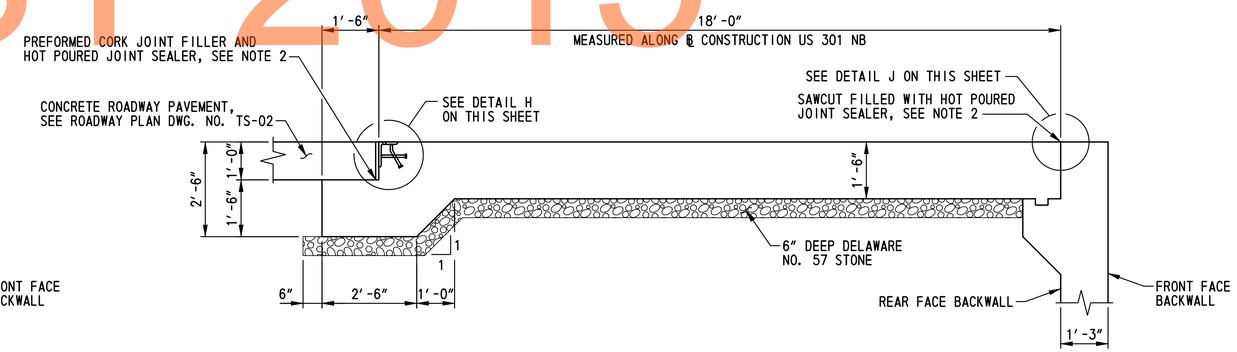

APPROACH SLAB B TYPICAL SECTION AV-AV
SCALE: ½″=1′-0″

DRAFT
NOT FOR BIDDING
AUGUST 2015

N:\31653-000\Contract 1B\CADD\Bridge\Br_No433\AS03_br1-433.dgn
2/5/2013 11:14:44 AM

DELAWARE DEPARTMENT OF TRANSPORTATION	ADDENDUMS / REVISIONS	SCALE: AS SHOWN	US 301 & SR 1 INTERCHANGE	CONTRACT T200911302	BRIDGE NO. 1-433	APPROACH SLAB B DETAILS - 1	BR1-3 AS-03
				COUNTY NEW CASTLE	DESIGNED BY: W.T.R.		SHEET NO. 285
					CHECKED BY: B.K.B.		TOTAL SHTS. 491

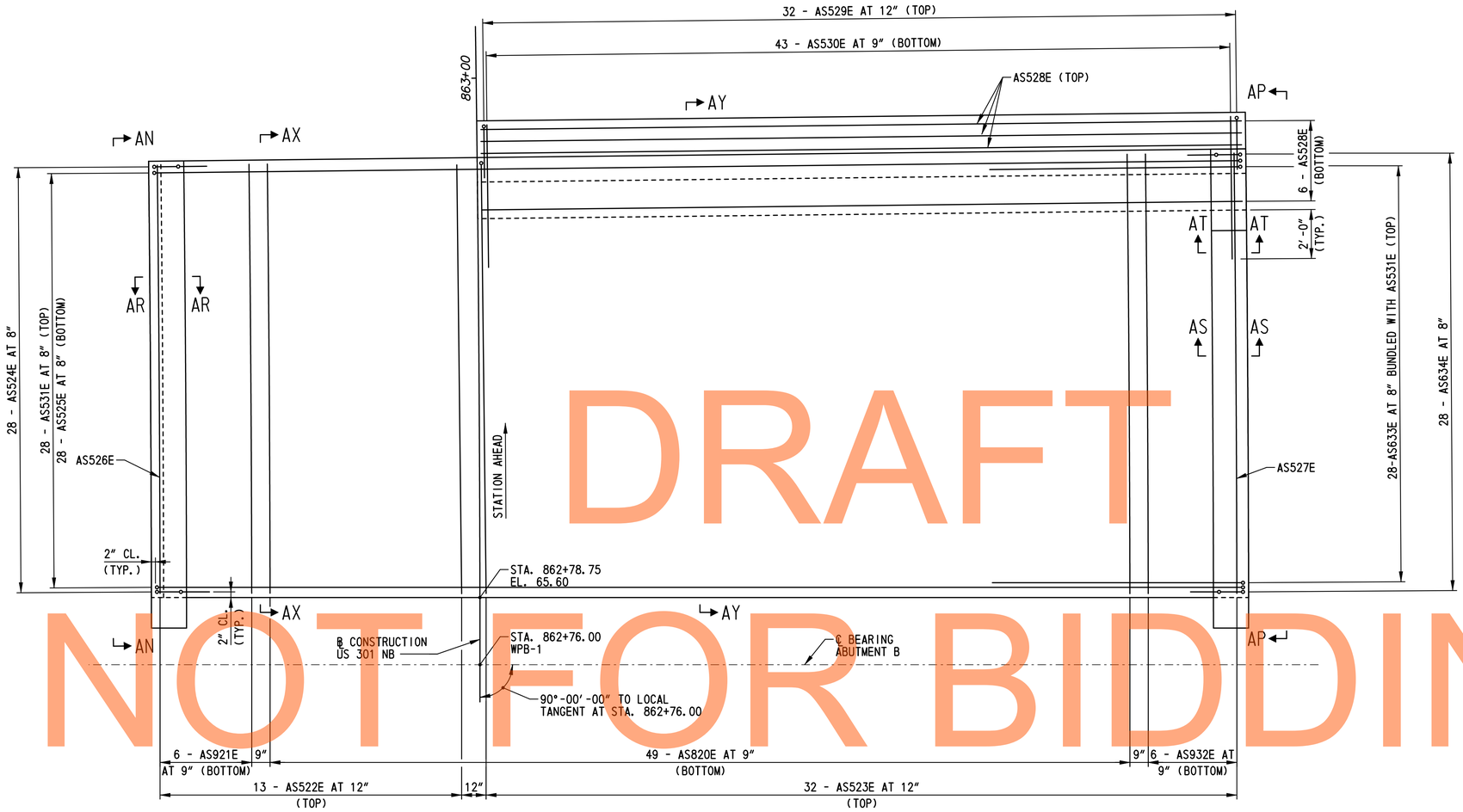

NOTE:
FOR VIEWS AN-AN AND AP-AP AND SECTIONS AR-AR, AS-AS AND AT-AT, SEE DWG. NO. AS-05.

APPROACH SLAB B REINFORCEMENT PLAN

SCALE: ⅜"=1'-0"

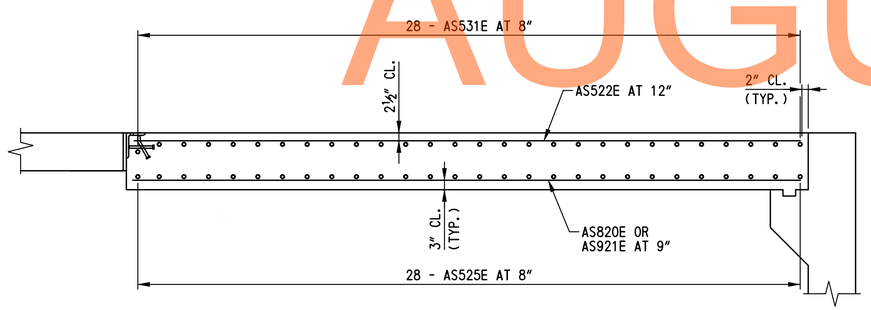

APPROACH SLAB B TYPICAL REINFORCEMENT SECTION AX-AX

SCALE: ½"=1'-0"

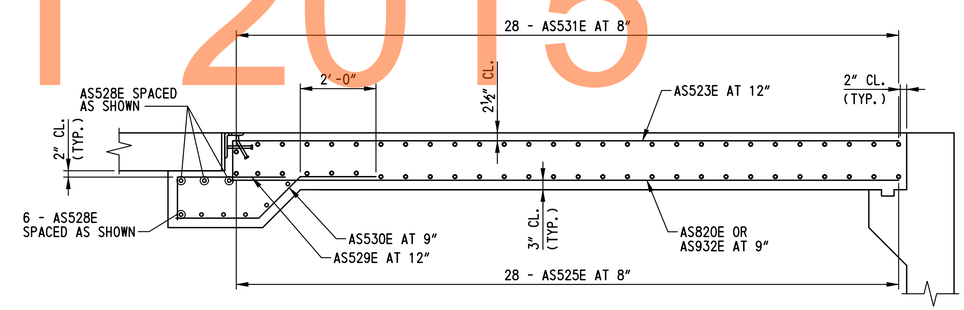

APPROACH SLAB B TYPICAL REINFORCEMENT SECTION AY-AY

SCALE: ½"=1'-0"

DRAFT
NOT FOR BIDDING
AUGUST 2015

N:\33653-000\Contract 1B\CADD\Bridge\Br_No433\AS04_Br1-433.dgn
2/5/2015 11:15:19 AM

DELAWARE DEPARTMENT OF TRANSPORTATION	ADDENDUMS / REVISIONS	SCALE: AS SHOWN	US 301 & SR 1 INTERCHANGE	CONTRACT T200911302	BRIDGE NO. 1-433	APPROACH SLAB B DETAILS – 2
				COUNTY NEW CASTLE	DESIGNED BY: W.T.R.	
					CHECKED BY: B.K.B.	

BR1-3
AS-04

SHEET NO. 286
TOTAL SHTS. 491

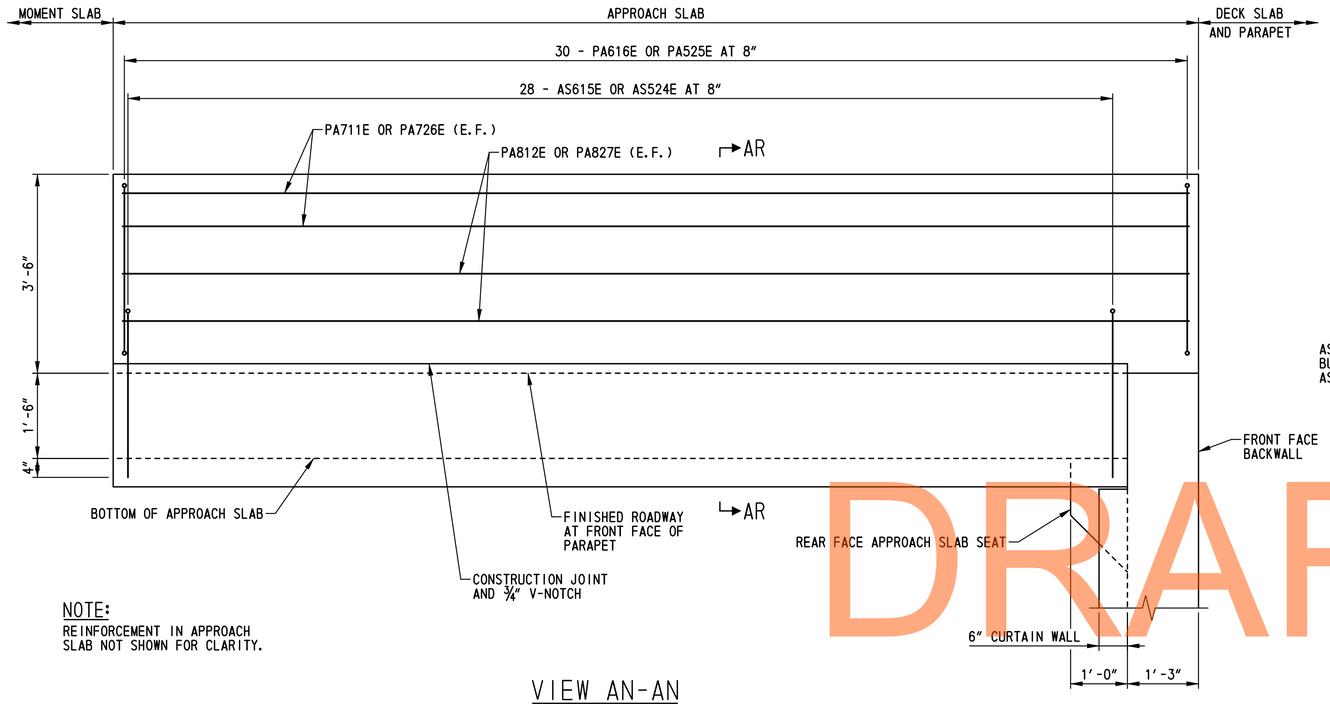

NOTE:
REINFORCEMENT IN APPROACH SLAB NOT SHOWN FOR CLARITY.

VIEW AN-AN
SCALE: ¾"=1'-0"

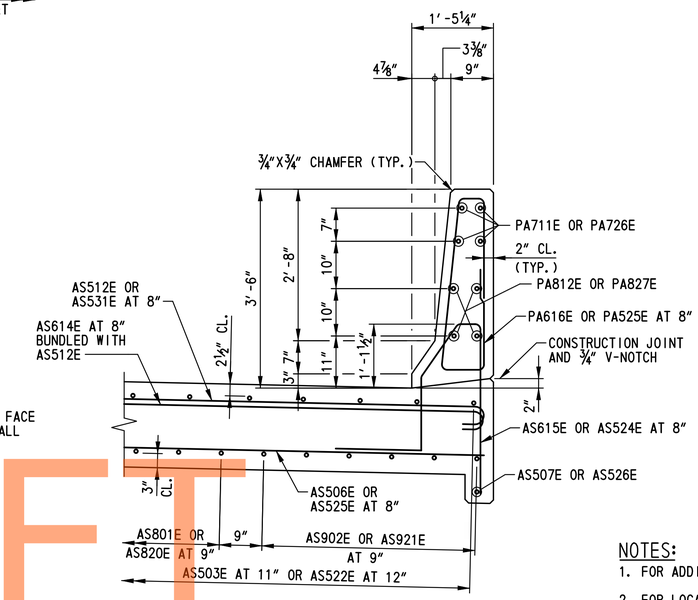

SECTION AR-AR
SCALE: ¾"=1'-0"

NOTES:
1. FOR ADDITIONAL REINFORCEMENT DETAILS, SEE DWG. AS-02 AND AS-04.
2. FOR LOCATION OF VIEWS AN-AN AND AP-AP, SEE DWG. NOS. AS-02 AND AS-04.

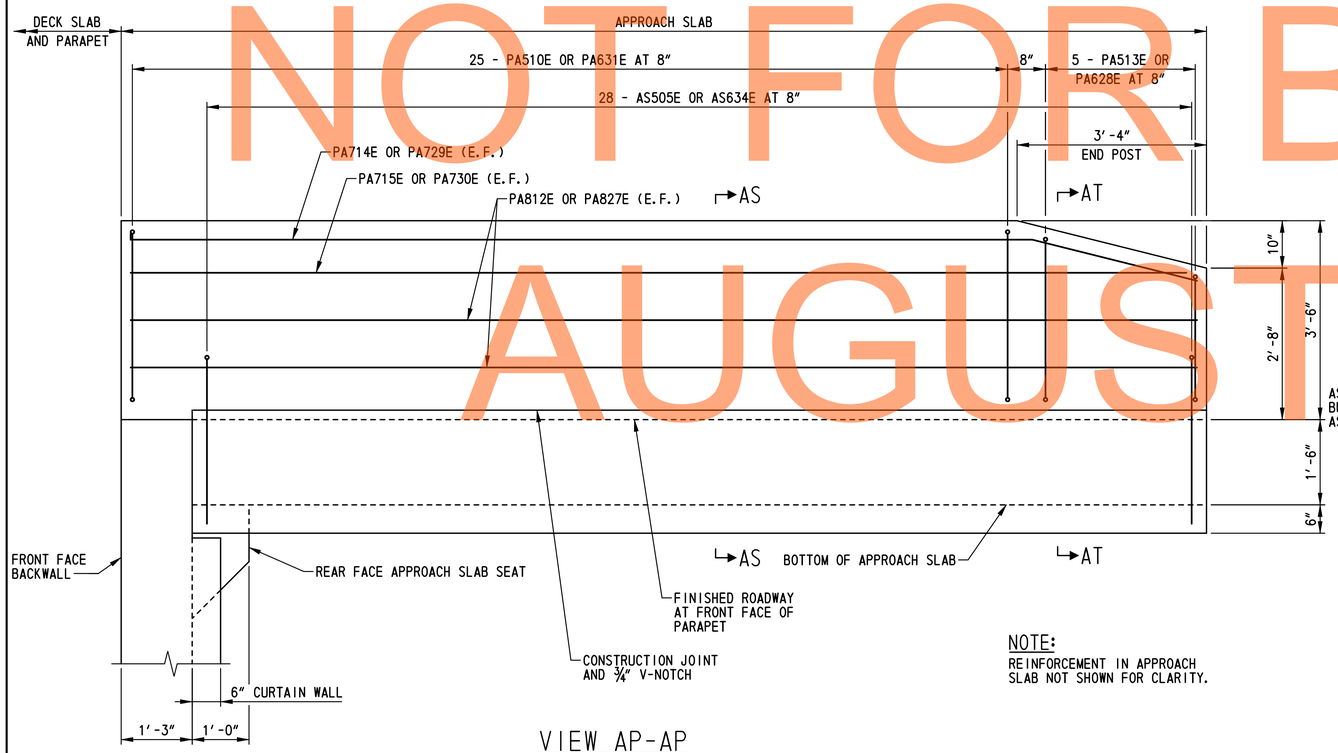

NOTE:
REINFORCEMENT IN APPROACH SLAB NOT SHOWN FOR CLARITY.

VIEW AP-AP
SCALE: ¾"=1'-0"

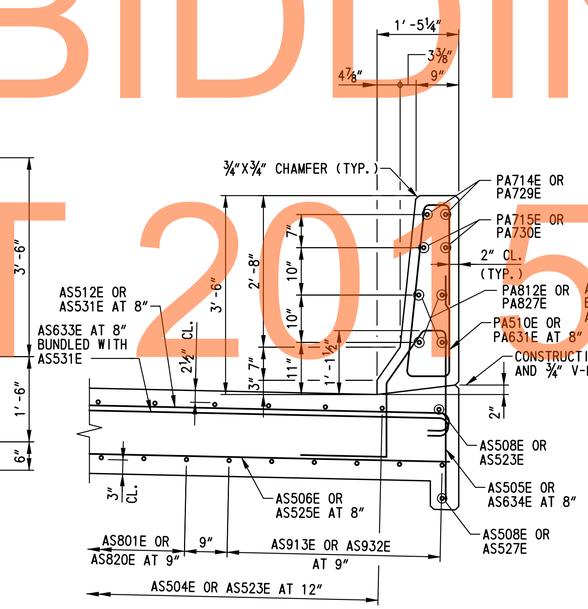

SECTION AS-AS
SCALE: ¾"=1'-0"

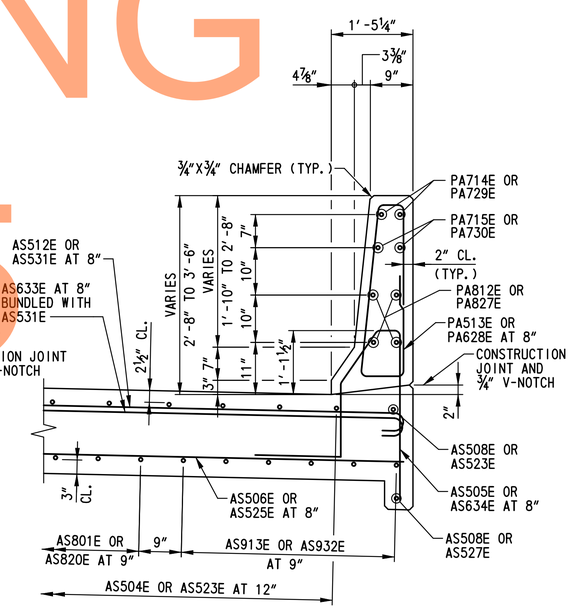

SECTION AT-AT
SCALE: ¾"=1'-0"

DRAFT
NOT FOR BIDDING
AUGUST 2015

N:\31653-000\Contract 1B\CADD\Bridge\Br_No433\AS05_br1-433.dgn
2/5/2013 11:15:46 AM

DELAWARE DEPARTMENT OF TRANSPORTATION	ADDENDUMS / REVISIONS	SCALE: AS SHOWN	US 301 & SR 1 INTERCHANGE	CONTRACT T200911302	BRIDGE NO. 1-433	APPROACH SLAB DETAILS	BR1-3 AS-05
				COUNTY NEW CASTLE	DESIGNED BY: W.T.R.		SHEET NO. 287
					CHECKED BY: B.K.B.		TOTAL SHTS. 491

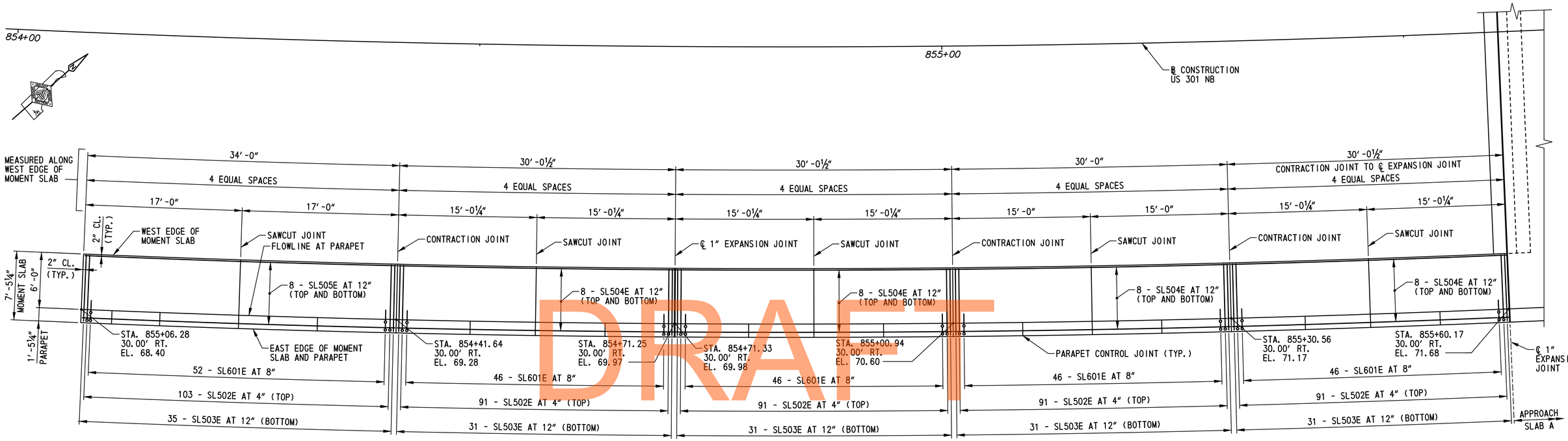

MOMENT SLAB REINFORCEMENT PLAN

SCALE: 3/16″=1′-0″

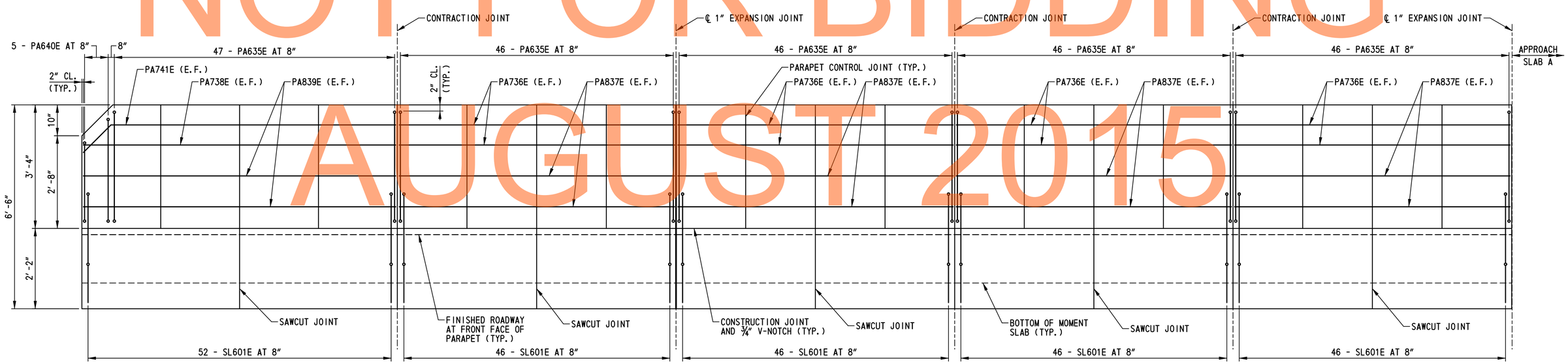

MOMENT SLAB PARAPET REINFORCEMENT ELEVATION

HORIZONTAL SCALE: 3/16″=1′-0″
VERTICAL SCALE: ¾″=1′-0″

NOTE:

FOR ADDITIONAL INFORMATION ON MOMENT SLABS INCLUDING TYPICAL SECTION, REINFORCEMENT, DETAILS AND NOTES, SEE DWG NO. MS-02.

DRAFT
NOT FOR BIDDING
AUGUST 2015

BR1-3
MS-01

N:\31653-000\Contract 1B\CADD\Bridge\Br_No433\MS01_br1-433.dgn
2/5/2013 11:16:19 AM

DELAWARE DEPARTMENT OF TRANSPORTATION	ADDENDUMS / REVISIONS	SCALE: AS SHOWN	US 301 & SR 1 INTERCHANGE	CONTRACT T200911302	BRIDGE NO. 1-433	MOMENT SLAB AND PARAPET REINFORCEMENT – 1	SHEET NO. 288
				COUNTY NEW CASTLE	DESIGNED BY: B.K.B.		TOTAL SHTS. 491
					CHECKED BY: W.A.G.		

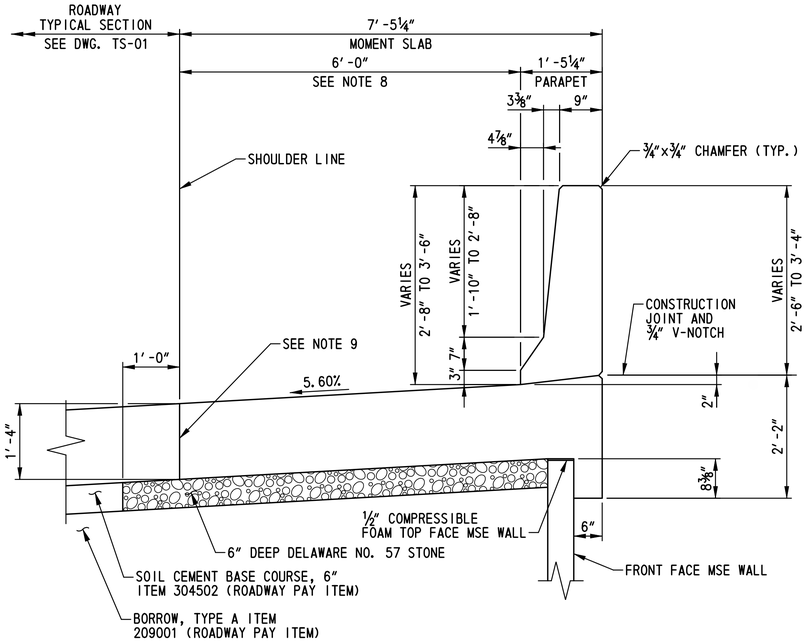

MOMENT SLAB TYPICAL SECTION

SCALE: ¾″=1′-0″

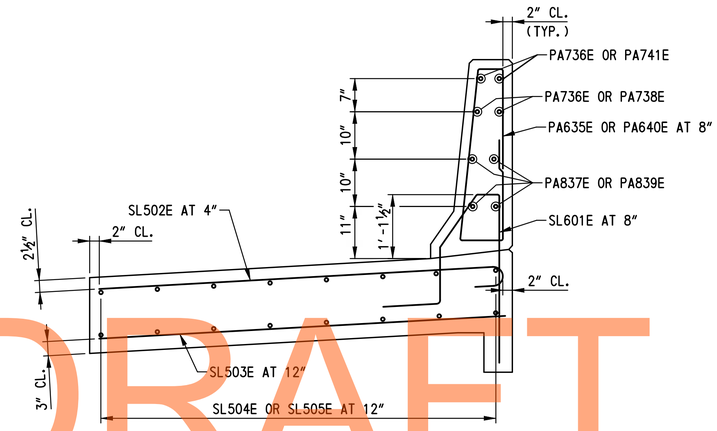

MOMENT SLAB REINFORCEMENT TYPICAL SECTION

SCALE: ¾″=1′-0″

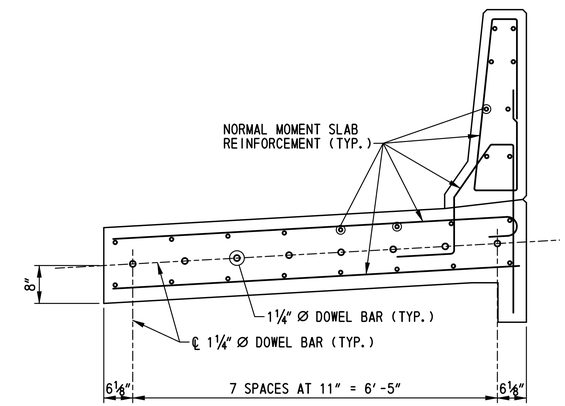

MOMENT SLAB JOINT TYPICAL SECTION

SCALE: ¾″=1′-0″

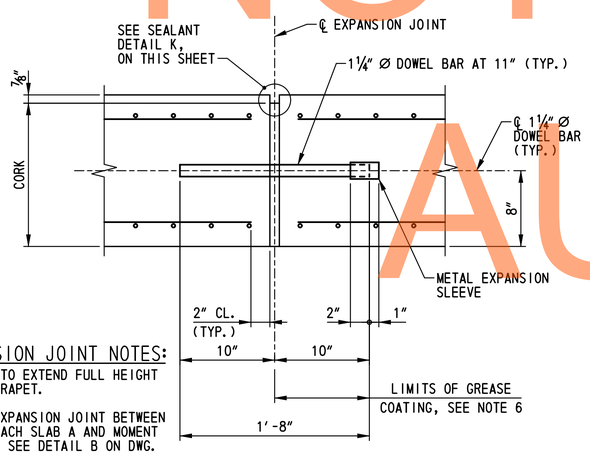

EXPANSION JOINT NOTES:

1. CORK TO EXTEND FULL HEIGHT OF PARAPET.
2. FOR EXPANSION JOINT BETWEEN APPROACH SLAB A AND MOMENT SLAB, SEE DETAIL B ON DWG. NO. AS-01.

EXPANSION JOINT SECTION

SCALE: 1½″=1′-0″

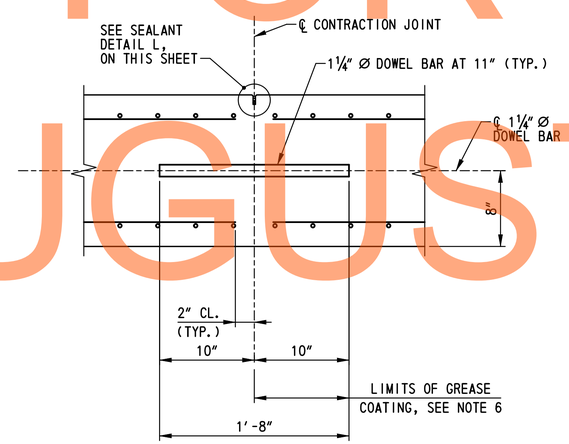

TYPICAL CONTRACTION JOINT SECTION

SCALE: 1½″=1′-0″

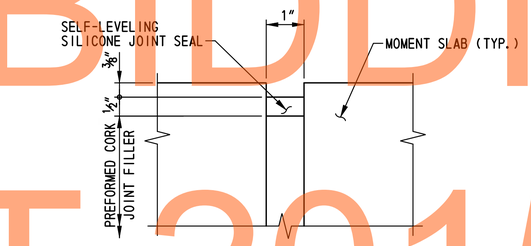

SEALANT DETAIL K

NOT TO SCALE

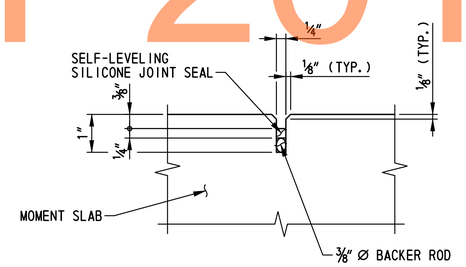

SEALANT DETAIL L

NOT TO SCALE

NOTES:

1. TOLERANCE ON ALL JOINT SEALANT DETAILS DIMENSIONS SHOWN WITHOUT RANGES SHALL BE PLUS 1/16″, MINUS 0″.
2. PAYMENT FOR CONSTRUCTION OF MOMENT SLAB WILL BE MADE UNDER ITEM NO. 602014 - PORTLAND CEMENT CONCRETE MASONRY, APPROACH SLAB, CLASS D. PAYMENT FOR THE PREFORMED CORK JOINT FILLER, SILICONE SEALER, DOWEL BARS AND METAL EXPANSION SLEEVES SHALL BE INCIDENTAL TO THIS ITEM.
3. DOWEL BARS SHALL CONFORM TO 824.02(G).
4. DOWELS SHALL BE ASSEMBLED IN A RIGID FRAMEWORK, SEE STANDARD P-1. THE EXPANSION JOINT FRAME WORK SHALL PROVIDE ADEQUATE SUPPORT TO MAINTAIN THE PREFORMED JOINT FILLER IN PROPER HORIZONTAL AND VERTICAL ALIGNMENT.
5. ANCHOR PINS SHALL BE USED TO SECURE THE FORMWORK ALONG THE SUBGRADE.
6. THE FREE MOVING OR UNANCHORED END OF ALL DOWEL BARS IN BOTH CONTRACTION AND EXPANSION JOINTS SHALL BE COATED AFTER INSTALLATION OF THE DEVICE UPON THE SUBGRADE AND IMMEDIATELY PRIOR TO THE POURING OF THE CONCRETE WITH GRAPHITE GREASE APPLIED WITH A GLOVED HAND. THIS SAME END OF ALL EXPANSION JOINT DOWELS SHALL BE CAPPED WITH A SNUG FITTING, CLOSED END METAL EXPANSION SLEEVE TEMPORARILY SECURED TO THE BAR SO AS TO PROVIDE A 1″ LONG OPEN SOCKET BEYOND THE BAR END AND TO LAP BACK 2″ ON THE BAR AT THE TIME OF INSTALLATION.
7. THE SILICONE SEALER SHALL BE ABLE TO ADHERE TO CONCRETE SUBSTRATES AND CONFORM TO FOLLOWING CRITERIA AFTER 21 DAYS AT 77° F:

ELONGATION, MINIMUM (PERCENT)	1400
JOINT MODULUS, AT 50 PERCENT ELONGATION, MAXIMUM (PSI)	7
JOINT MODULUS, AT 100 PERCENT ELONGATION, MAXIMUM (PSI)	8
JOINT MODULUS, AT 150 PERCENT ELONGATION, MAXIMUM (PSI)	9
ADHESION TO CONCRETE, MINIMUM ELONGATION, (PERCENT)	+600
ADHESION TO ASPHALT, MINIMUM ELONGATION, (PERCENT)	+600
JOINT MOVEMENT CAPABILITY, +100/-50, 10 CYCLES	NO FAILURE

8. RUMBLE STRIPS SHALL BE LOCATED IN THE MOMENT SLAB ADJACENT TO THE SHOULDER LINE. FOR RUMBLE STRIP DETAIL, SEE DWG. NO. DT-01.
9. PRIOR TO PLACING MOMENT SLAB CONCRETE ADJACENT TO EXISTING CONCRETE PAVEMENT, OR PRIOR TO PLACING CONCRETE PAVEMENT ADJACENT TO EXISTING MOMENT SLAB CONCRETE, AN APPROVED BOND BREAKER SHALL BE APPLIED TO THE EXISTING CONCRETE VERTICAL FACE. THIS LONGITUDINAL JOINT AT THE INTERFACE BETWEEN THE CONCRETE PAVEMENT AND THE MOMENT SLAB CONCRETE SHALL NOT BE SEALED. VERTICAL CRACKS IN THE EXISTING CONCRETE FACE SHALL BE COVERED OR SEALED AS APPROVED BY THE ENGINEER TO PREVENT INTRUSION OF THE NEW CONCRETE INTO THE EXISTING CONCRETE. ALL WORK SHALL BE INCIDENTAL TO ITEM NO. 602014 - PORTLAND CEMENT CONCRETE MASONRY, APPROACH SLAB, CLASS D.
10. REFLECTORS SHALL BE INSTALLED ALONG THE PARAPET. SEE DWG. NO. DT-05 FOR DETAILS.

BR1-3
MS-02

DRAFT
NOT FOR BIDDING
AUGUST 2015

N:\31653-000\Contract 1B\CADD\Bridge\Br_No433\MS02_br1-433.dgn
2/5/2013 11:16:50 AM

DELAWARE DEPARTMENT OF TRANSPORTATION

ADDENDUMS / REVISIONS

SCALE: AS SHOWN

US 301 & SR 1 INTERCHANGE

CONTRACT	BRIDGE NO.	1-433
T200911302	DESIGNED BY: B.K.B.	
COUNTY		
NEW CASTLE	CHECKED BY: W.A.G.	

MOMENT SLAB AND PARAPET REINFORCEMENT – 2

SHEET NO. 289

TOTAL SHTS. 491

① ANY MARK NUMBER WITH SUFFIX 'E' DENOTES EPOXY COATED REINFORCING STEEL.

② ALL MARK 'LOCATION PREFIXES' SHALL CONSIST OF TWO LETTERS AND ARE AS FOLLOWS: AB = ABUTMENT, AS = APPROACH SLAB, BC = BOX CULVERT, BW = BACKWALL, CL = COLUMN, DK = DECK, DL = DOWEL, FT = FOOTING, HW = HEADWALL, MS = MISC. BARS, PA = PARAPET, PR = PIER, SC = SHEETPILE CAP, SL = SLAB, TW = TOEWALL, WL = WALL (UNIQUE LOCATION), WW = WINGWALL

SPECIFICATIONS					BENDING DIMENSIONS (FEET-INCHES /QUARTER INCH)											
QTY.	SIZE	LENGTH	MARK	TYPE	A	B	C	D	E	F/R	G	H	J	K	O
APPROACH SLAB A															
49	8	17-06 3	AS801E	STR		17-06 3									
		T0				T0									
		17-11 3				17-11 3									
6	9	17-11 3	AS902E	STR		17-11 3									
8	5	17-11 1	AS503E	STR		17-11 1									
		T0				T0									
		18-00 1				18-00 1									
37	5	19-00 1	AS504E	T15		1-06 0	17-06 1								
		T0					T0								
		19-05 1					17-11 1								
28	5	6-10 1	AS505E	T15		2-11 2	0-05 1	1-01 3	1-03 3	1-00 0		1-03 3	0-08 1	0-11 0	
28	5	44-06 2	AS506E	STR		44-06 2									
1	5	18-00 1	AS507E	STR		18-00 1									
2	5	17-06 1	AS508E	STR		17-06 1									
9	5	36-01 1	AS509E	STR		36-01 1									
37	5	3-07 0	AS510E	17		1-01 0	2-06 0								
50	5	5-07 0	AS511E	6		2-00 0	1-05 0	2-02 0				1-00 0		1-00 0	
28	5	45-08 2	AS512E	1	0-07 0	44-06 2					0-07 0		0-05 0		
6	9	17-06 1	AS913E	STR		17-06 1									
28	6	10-08 0	AS614E	1	0-08 0	10-00 0							0-06 0		
28	6	6-10 1	AS615E	T15		2-11 2	0-05 1	1-01 3	1-03 3	1-00 0		1-03 3	0-08 1	0-11 0	
25	5	9-03 1	PA510E	PA		2-06 2	0-09 0	3-00 1	0-05 0	2-06 2		3-00 0		0-04 0	
4	7	18-11 0	PA711E	STR		18-11 0									
8	8	18-11 0	PA812E	STR		18-11 0							0-06 0		
5	5	7-08 2	PA513E	PA		2-01 3	0-09 0	2-03 0	0-05 0	2-01 3		2-02 2		0-04 0	
		T0				T0		T0		T0		T0			
		9-00 1				2-05 3		2-10 3		2-05 3		2-10 2			
2	7	18-10 2	PA714E	6		15-06 3	3-03 3					0-09 2		3-02 2	
2	7	17-05 1	PA715E	STR		17-05 1									
30	6	9-03 1	PA616E	PA		2-06 2	0-09 0	3-00 1	0-05 0	2-06 2		3-00 0		0-04 0	

SPECIFICATIONS					BENDING DIMENSIONS (FEET-INCHES /QUARTER INCH)											
QTY.	SIZE	LENGTH	MARK	TYPE	A	B	C	D	E	F/R	G	H	J	K	O
APPROACH SLAB B															
49	8	17-06 3	AS820E	STR		17-06 3									
		T0				T0									
		17-11 3				17-11 3									
6	9	17-06 1	AS921E	STR		17-06 1									
13	5	17-08 1	AS522E	STR		17-08 1									
		T0				T0									
		17-09 3				17-09 3									
32	5	19-02 0	AS523E	17		1-06 0	17-08 0								
		T0					T0								
		19-06 1					18-00 1								
28	5	6-10 1	AS524E	T15		2-11 2	0-05 1	1-01 3	1-03 3	1-00 0		1-03 3	0-08 1	0-11 0	
28	5	44-06 2	AS525E	STR		44-06 2									
1	5	17-08 1	AS526E	STR		17-08 1									
1	5	18-00 1	AS527E	STR		18-00 1									
9	5	31-01 1	AS528E	STR		31-01 1									
33	5	3-07 0	AS529E	17		1-01 0	2-06 0								
43	5	5-07 0	AS530E	6		2-00 0	1-05 0	2-02 0				1-00 0		1-00 0	
28	5	45-08 2	AS531E	1	0-07 0	44-06 2					0-07 0		0-05 0		
6	9	17-11 3	AS932E	STR		17-11 3									
28	6	10-08 0	AS633E	1	0-08	10-00 0							0-06 0		
28	6	6-10 1	AS634E	T15		2-11 2	0-05 1	1-01 3	1-03 3	1-00 0		1-03 3	0-08 1	0-11 0	
30	5	9-03 1	PA525E	PA		2-06 2	0-09 0	3-00 1	0-05 0	2-06 2		3-00 0		0-04 0	
4	7	18-11 0	PA726E	STR		18-11 0									
8	8	18-11 0	PA827E	STR		18-11 0									
5	6	7-08 2	PA628E	PA		2-01 3	0-09 0	2-03 0	0-05 0	2-01 3		2-02 2		0-04 0	
		T0				T0		T0		T0		T0			
		9-00 1				2-05 3		2-10 3		2-05 3		2-10 2			
2	7	18-10 2	PA729E	6		15-06 3	3-03 3					0-09 2		3-02 2	
2	7	17-05 1	PA730E	STR		17-05 1									
25	6	9-03 1	PA631E	PA		2-06 2	0-09 0	3-00 1	0-05 0	2-06 2		3-00 0		0-04 0	

SPECIFICATIONS					BENDING DIMENSIONS (FEET-INCHES /QUARTER INCH)											
QTY.	SIZE	LENGTH	MARK	TYPE	A	B	C	D	E	F/R	G	H	J	K	O
MOMENT SLAB															
236	6	6-06 0	SL601E	T15		2-11 0	0-05 2	1-01 2	1-00 0	1-00 0			0-07 3	0-11 0	1-01 1
467	5	7-08 1	SL502E	1	0-07 0	7-01 1							0-05 0		
159	5	7-01 1	SL503E	STR		7-01 1									
64	5	29-08 0	SL504E	STR		29-08 0									
16	5	33-08 0	SL505E	STR		33-08 0									
231	6	9-03 1	PA635E	PA		2-06 2	0-09 0	3-00 1	0-05 0	2-06 2		3-00 0		0-04 0	
16	7	29-09 0	PA736E	STR		29-09 0									
16	8	29-09 0	PA837E	STR		29-09 0									
2	7	33-09 0	PA738E	STR		33-09 0									
4	8	33-09 0	PA839E	STR		33-09 0									
5	6	7-08 2	PA640E	PA		2-01 3	0-09 0	2-03 0	0-05 0	2-01 3		2-02 2		0-04 0	
		T0				T0		T0		T0		T0			
		9-00 1				2-05 3		2-10 3		2-05 3		2-10 2			
2	7	33-09 1	PA741E	6		30-05 2	3-03 3					0-09 2		3-02 2	

ASTM STANDARD ENGLISH REINFORCING BARS				RECOMMENDED END HOOKS, APPLICABLE TO ALL GRADES				STIRRUP AND TIE HOOKS, APPLICABLE TO ALL GRADES			
	NOMINAL DIMENSIONS				180° HOOKS		90° HOOKS		90° HOOK	135° HOOK	
BAR SIZE	DIAMETER (INCHES)	AREA (INCHES²)	WEIGHT (LBS./FT.)	D	A OR G	J	A OR G	D	A OR G	A OR G	H
3	0.375	0.110	0.376	2¼"	5"	3"	6"	1½"	4"	4"	2½"
4	0.500	0.200	0.668	3"	6"	4"	8"	2"	4½"	4½"	3"
5	0.625	0.310	1.043	3¾"	7"	5"	10"	2½"	6"	5½"	3¾"
6	0.750	0.440	1.502	4½"	8"	6"	1-0"	4½"	1-0"	8"	4½"
7	0.875	0.600	2.044	5¼"	10"	7"	1-2"	5¼"	1-2"	9"	5¼"
8	1.000	0.790	2.670	6"	11"	8"	1-4"	6"	1-4"	10½"	6"
9	1.128	1.000	3.400	9½"	1-3"	11¾"	1-7"				
10	1.270	1.270	4.303	10¾"	1-5"	1-1¼"	1-10"				
11	1.410	1.560	5.313	1-0"	1-7"	1-2¾"	2-0"				
14	1.693	2.250	7.650	1-6¼"	2-3"	1-9¾"	2-7"				
18	2.257	4.000	13.600	2-0"	3-0"	2-4½"	3-5"				

NOTES:

1. FIGURES SHOWN IN CIRCLES REPRESENT BAR BEND TYPES.
2. STANDARD BAR BENDS INCLUDE ONLY THOSE TYPES BELOW, INDICATED AS SUCH.
3. ALL DIMENSIONS OUT-TO-OUT, EXCEPT "A" AND "G" ON STD. 180° AND 135° HOOKS.
4. "J" DIMENSIONS ON 180° HOOKS TO BE SHOWN ONLY WHERE NECESSARY TO RESTRICT HOOK SIZE, OTHERWISE STANDARD 'ACI' HOOKS ARE TO BE USED.
5. WHERE "J" IS NOT SHOWN, "J" WILL BE KEPT EQUAL TO OR LESS THAN "H" ON TYPES 3, 5 AND 22. WHERE "J" CAN EXCEED "H", IT SHALL BE SHOWN.
6. "H" DIMENSIONS OF STIRRUPS TO BE SHOWN AS NEEDED TO FIT WITHIN THE CONCRETE.
7. UNLESS OTHERWISE NOTED, DIAMETER "D" IS THE SAME FOR ALL BENDS AND HOOKS ON A BAR (EXCEPT FOR BEND TYPES 11 AND 13).
8. WHERE SLOPE DIFFERS FROM 45° OFFSET, "H" AND "K" MUST BE SHOWN.
9. WHERE BARS ARE TO BE BENT MORE ACCURATELY THAN STANDARD BENDING TOLERANCES, BENDING DIMENSIONS REQUIRING CLOSER FABRICATION SHOULD HAVE LIMITS INDICATED.
10. FOR RECOMMENDED DIAMETER "D", OF BENDS, HOOKS, ETC., REFER TO TABLE ABOVE, 'CRSI' OR 'ACI' TABLES WHERE APPLICABLE AND REQUIRED.
11. TYPE S1-S6, S11, T1-T3 AND T6-T9 APPLICABLE TO BAR SIZES #3 THROUGH #8.

STANDARD BAR BENDS

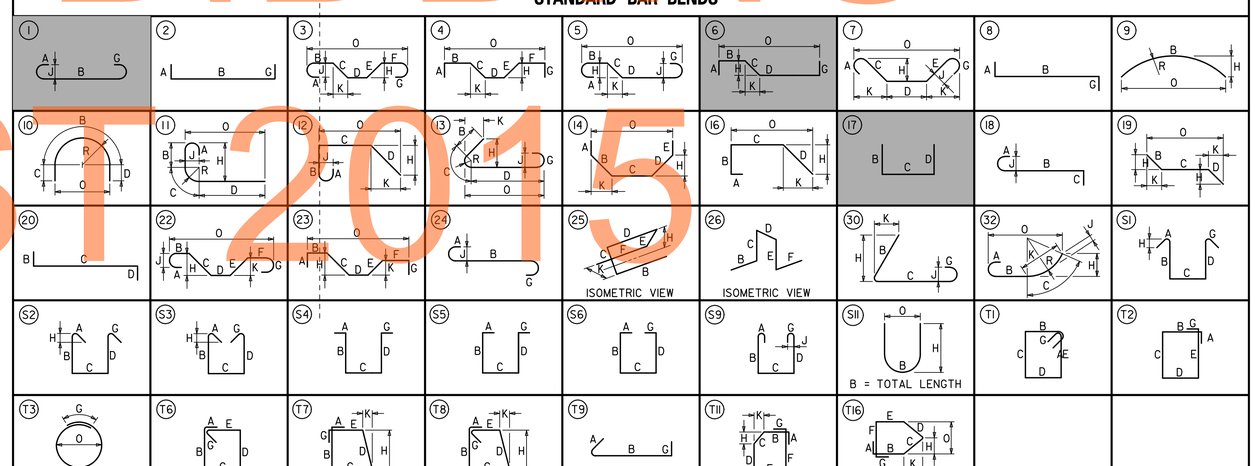

SPECIAL BAR BENDS

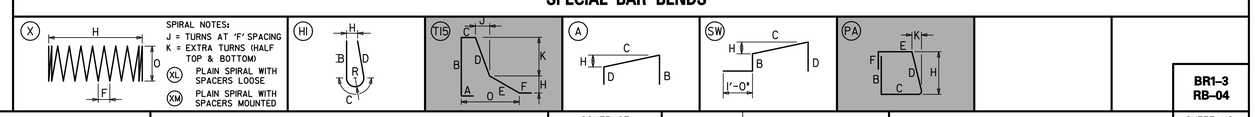

STIRRUP AND TIE HOOKS

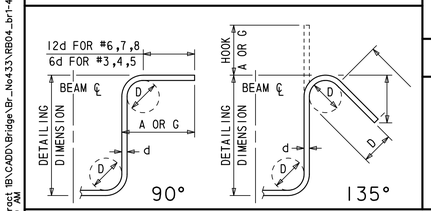

180° AND 90° END HOOKS

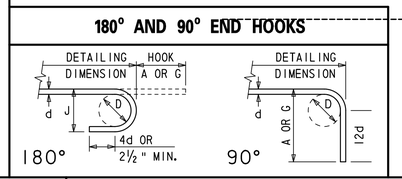

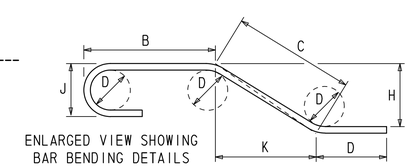

ENLARGED VIEW SHOWING BAR BENDING DETAILS

DRAFT
NOT FOR BIDDING
AUGUST 2015

N:\31653-000\Contract T$\CADD\Bridge\Br_No433\RB04_br1-433.dgn
2/5/2013 11:17:30 AM

DELAWARE DEPARTMENT OF TRANSPORTATION

ADDENDUMS / REVISIONS

NOT TO SCALE

US 301 & SR 1 INTERCHANGE

CONTRACT	BRIDGE NO.	1-433
T200911302	DESIGNED BY: W.T.R.	
COUNTY		
NEW CASTLE	CHECKED BY: B.K.B.	

APPROACH SLAB AND MOMENT SLAB REINFORCEMENT LIST

BR1-3
RB-04

SHEET NO. 290
TOTAL SHTS. 491

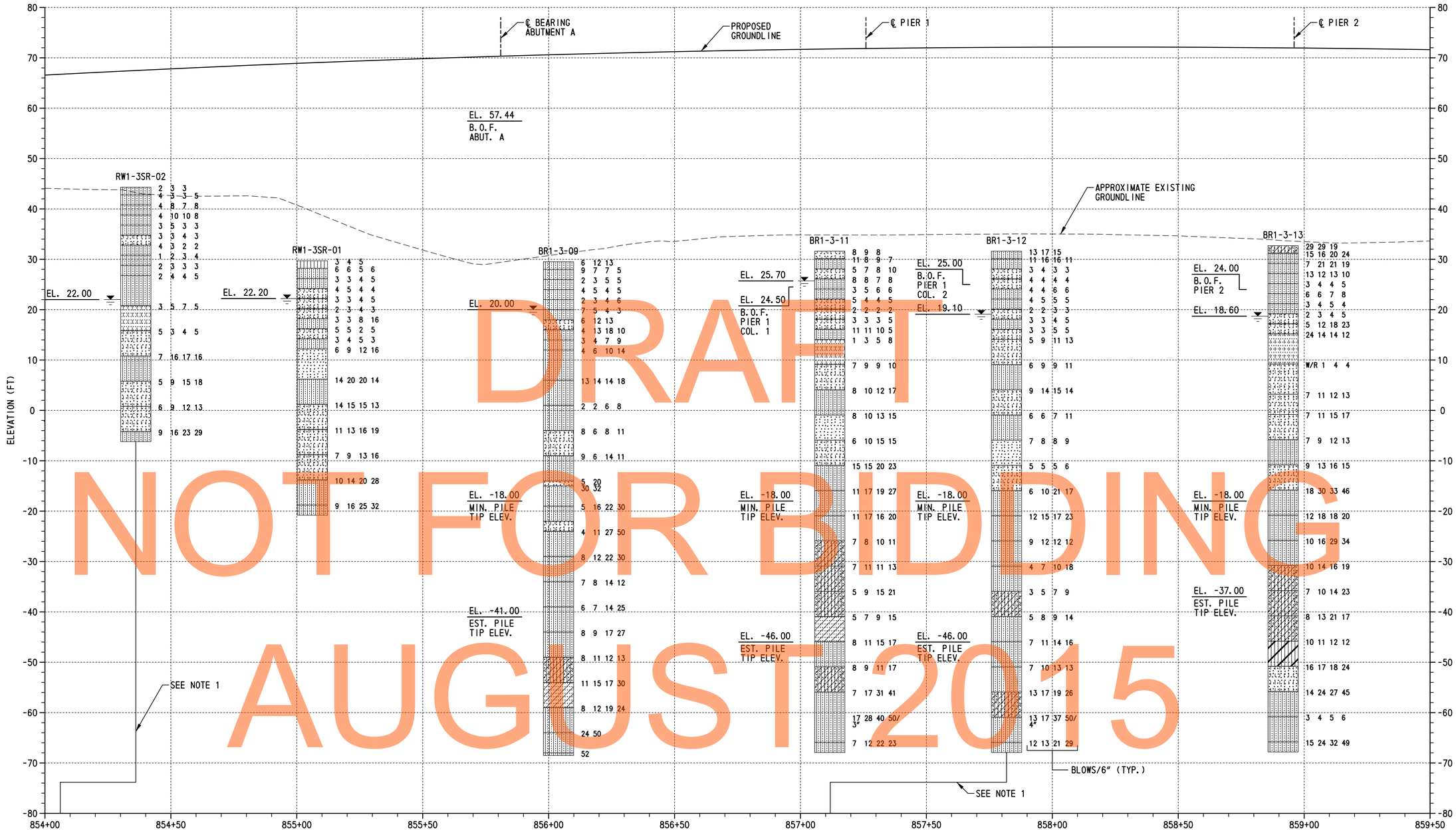

DRAFT
NOT FOR BIDDING
AUGUST 2015

LEGEND:

- SILTY SAND
- CLAYEY SAND
- SILT
- WELL GRADED SAND WITH SILT
- POORLY GRADED CLAYEY SILTY SAND
- POORLY GRADED SAND
- POORLY GRADED SAND WITH SILT
- SILTY LOW PLASTICITY CLAY
- WATER TABLE AT BORING COMPLETION

BORING PROFILE

HORIZONTAL SCALE: 1"=20'-0"
VERTICAL SCALE: 1"=10'-0"

TEST BORINGS				
DESIGNATION	STATION	OFFSET	NORTHING	EASTING
RW1-3SR-01	855+06.21	35.73' RT.	556767	590143
RW1-3SR-02	854+06.09	35.36' RT.	556691	590075
BR1-3-09	856+03.57	7.63' LT.	556871	590171
BR1-3-11	857+11.62	19.60' LT.	556965	590223
BR1-3-12	857+11.82	80.40' RT.	556909	590306
BR1-3-13	858+91.64	0.06' LT.	557108	590332

NOTES:

1. BORINGS RW1-3SR-02 AND BR1-3-12 ARE SHOWN 15'-0" AND 35'-0" DOWNSTATION FROM ACTUAL BORING LOCATION.
2. FOR ADDITIONAL BORING INFORMATION, SEE DWG. NO. PE-01.

VERTICAL SCALE FEET 0 10 20 30

BR1-3
BO-01

N:\31653-000\CONTRACT 1B\CADD\Bridge\Br_No433\B001_br1-433.dgn
2/6/2013 11:55:32 AM

DELAWARE DEPARTMENT OF TRANSPORTATION

ADDENDUMS / REVISIONS

SCALE: AS SHOWN

US 301 & SR 1 INTERCHANGE

CONTRACT	BRIDGE NO.	BR1-433
T200911302	DESIGNED BY: B.K.B.	
COUNTY		
NEW CASTLE	CHECKED BY: W.A.G.	

BORING PROFILE – 1

SHEET NO. 291
TOTAL SHTS. 491

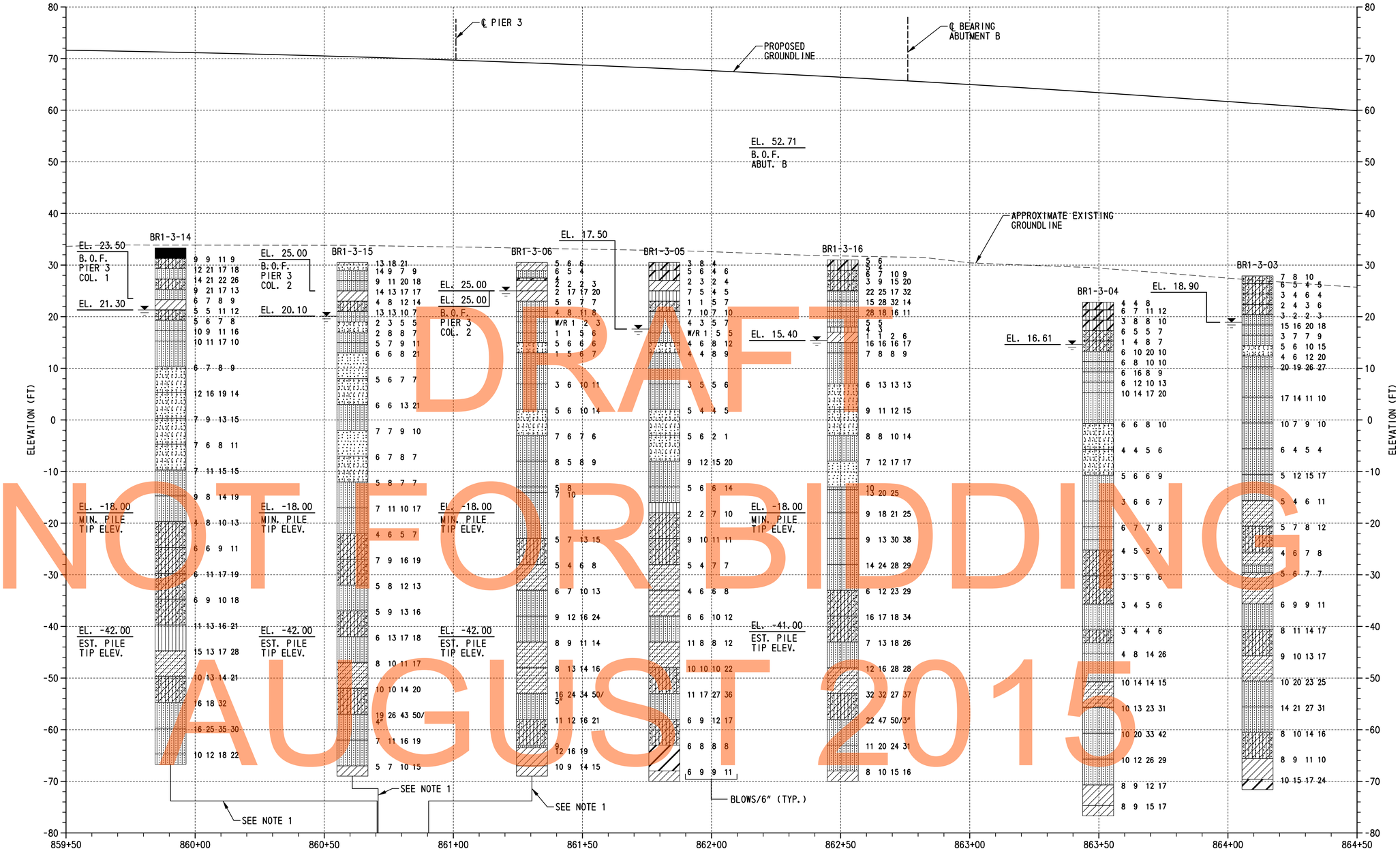

DRAFT
NOT FOR BIDDING
AUGUST 2015

LEGEND:

- LOW PLASTICITY CLAY
- SILTY SAND
- WELL GRADED SAND WITH SILT
- POORLY GRADED SAND WITH SILT
- CLAYEY SAND
- POORLY GRADED CLAYEY SILTY SAND
- SILTY LOW PLASTICITY CLAY
- SILT
- HIGH PLASTICITY CLAY
- POORLY GRADED SAND
- PAVING
- WATER TABLE AT BORING COMPLETION

STATION (FT)

BORING PROFILE

HORIZONTAL SCALE: 1"=20'-0"
VERTICAL SCALE: 1"=10'-0"

TEST BORINGS				
DESIGNATION	STATION	OFFSET	NORTHING	EASTING
BR1-3-03	864+11.46	15.50' LT.	557598	590494
BR1-3-04	863+49.72	56.44' RT.	557521	590550
BR1-3-05	861+81.70	60.00' RT.	557354	590505
BR1-3-06	860+90.43	77.06' RT.	557259	590488
BR1-3-14	860+70.48	50.68' LT.	557289	590362
BR1-3-15	860+70.87	49.32' RT.	557251	590454
BR1-3-16	862+50.82	7.56' RT.	557437	590477

NOTES:

1. BORINGS BR1-3-14 AND BR1-3-15 ARE SHOWN 40'-0" AND 5'-0" UPSTATION FROM ACTUAL BORING LOCATIONS. BORING BR1-3-06 IS SHOWN 20'-0" DOWNSTATION FROM ACTUAL BORING LOCATION.
2. FOR ADDITIONAL BORING INFORMATION, SEE DWG. NO. PE-02.

VERTICAL SCALE FEET 30 20 10 0

BR1-3
BO-02

N:\31653-000\CONTRACT 1B\CADD\Bridge\Br_No433\B002_br1-433.dgn
2/6/2013 11:57:38 AM

DELAWARE DEPARTMENT OF TRANSPORTATION

ADDENDUMS / REVISIONS

SCALE: AS SHOWN

US 301 & SR 1 INTERCHANGE

CONTRACT	BRIDGE NO.	BR1-433
T200911302	DESIGNED BY: B.K.B.	
COUNTY		
NEW CASTLE	CHECKED BY: W.A.G.	

BORING PROFILE – 2

SHEET NO.
292
TOTAL SHTS.
491