ITMS LEGEND

- ITMS-CON – PROPOSED MULTIDUCT ITMS CONDUIT
- EX-ITS – EXISTING ITMS CONDUIT
- ITMS-CON – ITMS CONDUIT INSTALLED IN PHASE 1
- CA/X – ITMS CABINET AND IDENTIFIER
- ITMS CONDUIT JUNCTION WELL
- JB/X – JUNCTION WELL IDENTIFIER (TYPE) (EXISTING AND PROPOSED)
- CO/X – CONDUIT RUN IDENTIFIER (# OF RUN) (EXISTING AND PROPOSED)
- PB/X – POLE BASE IDENTIFIER (TYPE) (EXISTING AND PROPOSED)
- JB/X – PROPOSED CONCRETE BARRIER JUNCTION BOX IDENTIFIER (TYPE)
- RM/C – TO BE REMOVED BY CONTRACTOR
- AB – TO BE ABANDONED BY CONTRACTOR
- P – PROPOSED ELECTRICAL SERVICE ON PEDESTAL
- POLE BASE

ITMS CONDUIT RUN SCHEDULE

CO*	# OF CONDUITS	SIZE	LENGTH	B/T/O	AMOUNT AND TYPE OF CABLE/WIRE (SUPPLY AND INSTALLATION BY DELDOT FORCES)
1*	1	4 IN	371 FT**	-	1-144S, 1-24S, & 1-48S
2	2	4 IN	160 FT	T	1-144S, 1-24S, & 1-48S
3	2	4 IN	120 FT	T	1-144S, 1-24S, & 1-48S
4	2	4 IN	574 FT**	T	1-144S, 1-24S, & 1-48S
41	2	2 IN	160 FT	T	(2)*4, (4)*6, (1)*6 GROUND

*DENOTES EXISTING CONDUIT
**QUANTITY CONTINUES ON ADJACENT SHEET
***DENOTES CONDUIT INSTALLED BY DELDOT FORCES

B = BORE, T = TRENCH, O = OPEN CUT, BM = BRIDGE MOUNTED

SPECIAL NOTES:

1. ALL WORK ASSOCIATED WITH THE RELOCATION OF THE EXISTING ITMS PATHWAY LOCATED ALONG SR 1 SOUTHBOUND AS SHOWN ON DWG. NOS. SS-01 THROUGH SS-07 SHALL OCCUR AS THE FIRST ORDER OF WORK. ALL WORK SHALL BE COMPLETE, OPERATIONAL, AND ACCEPTED BY DELDOT TRAFFIC PRIOR TO IMPACTING EXISTING PATHWAY.
2. PRIOR TO RELOCATION OF THE ITMS PATHWAY THE CONTRACTOR SHALL STAKEOUT THE LOCATION OF ALL PROPOSED GUARDRAIL, GUARDRAIL END TREATMENTS, SIGNS, STRUCTURES AND DRAINAGE FEATURES WITHIN THE LIMITS OF THE PROPOSED ITMS PATHWAY AND CHECK FOR CONFLICTS WITH THE PROPOSED ITMS CONDUIT. ANY AND ALL COSTS ASSOCIATED WITH REPAIRS OR RELOCATION OF THE NEW ITMS CONDUIT DUE TO CONFLICTS WITH OTHER PROPOSED WORK SHALL BE MADE AT THE EXPENSE OF THE CONTRACTOR.

NOTES:

1. THE CONTRACTOR SHALL REMOVE THE EXISTING TYPE 4 JUNCTION WELL AND INSTALL A TYPE 7 JUNCTION WELL IN THE SAME LOCATION. COORDINATE REMOVAL AND INSTALLATION OF JUNCTION WELLS WITH DELDOT TRAFFIC. PROVIDE 4 WEEKS NOTICE.
2. CONDUITS TO BE INSTALLED IN CONCRETED ENCASED DUCT BANK, TWO CONDUITS WIDE BY TWO CONDUITS HIGH. CONCRETE ENCASEMENT SHALL BE A MINIMUM OF 20"x18" AND PROVIDE A 3" MINIMUM CONCRETE ENVELOPE AROUND ALL SIDES OF CONDUITS AND A 2" MINIMUM SPACE BETWEEN CONDUITS. CONCRETE SHALL BE CLASS C. CONTRACTOR SHALL PROVIDE A CONDUIT SUPPORT SPACER DETAIL TO THE ENGINEER FOR APPROVAL PRIOR TO INSTALLATION.
3. CONSTRUCTION PHASE 1 CONDITIONS SHOWN.

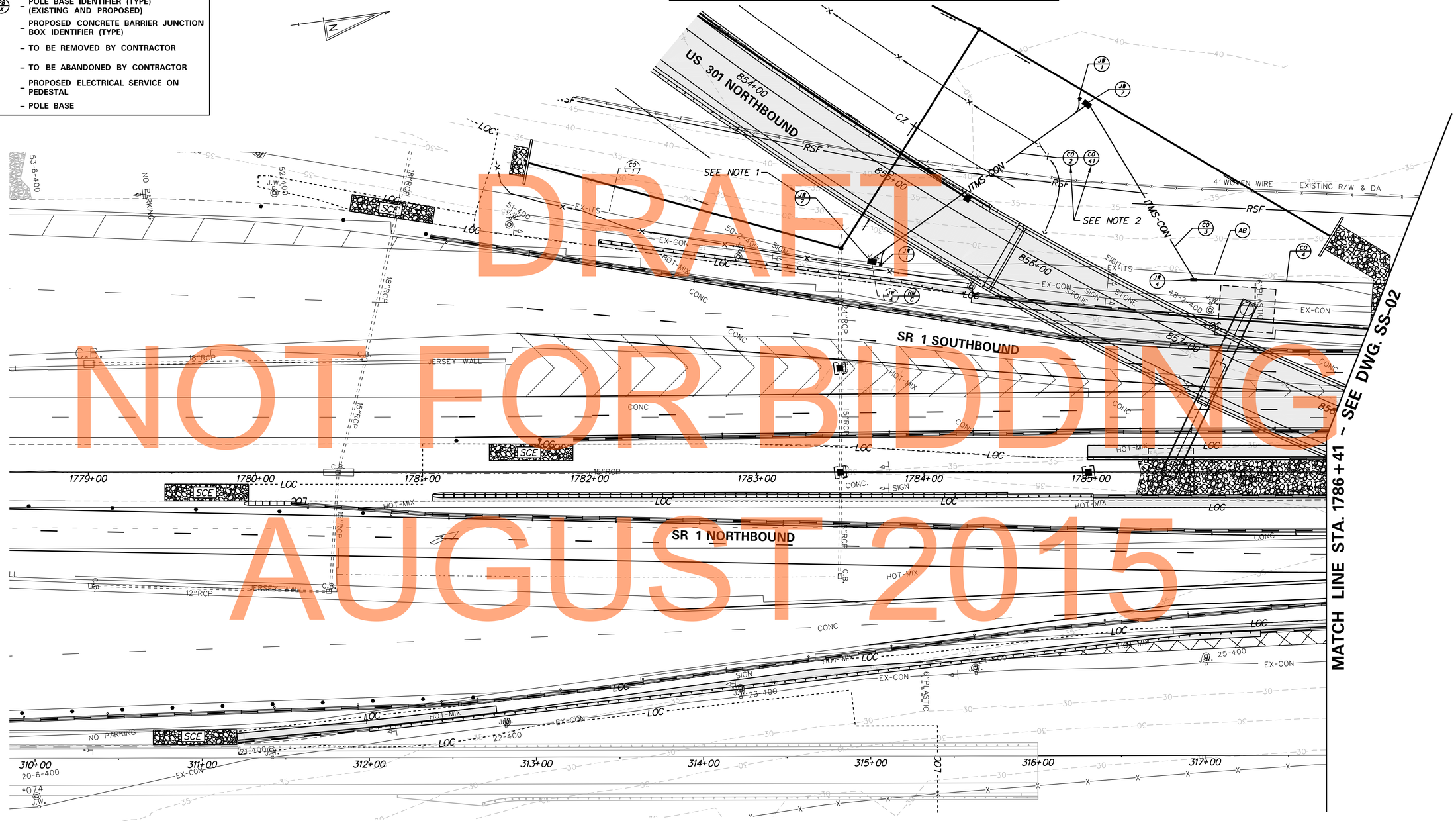

DRAFT
NOT FOR BIDDING
AUGUST 2015

DELAWARE DEPARTMENT OF TRANSPORTATION	ADDENDUMS / REVISIONS	SCALE 0 30 60 90 FEET	US 301 & SR 1 INTERCHANGE	CONTRACT T200911302	BRIDGE NO. BR1-433	ITMS PATHWAY RELOCATION PLANS	SS-01
				COUNTY NEW CASTLE	DESIGNED BY: J.H.R.	SIGNING, STRIPING & CONDUIT PLAN	SHEET NO. 450
					CHECKED BY: J.M.M.		TOTAL SHTS. 491

n:\3653-000\contract tb\cadd\SS001U301_1B.dgn
2/4/2013 1:59:13 PM

SPECIAL NOTES:

1. ALL WORK ASSOCIATED WITH THE RELOCATION OF THE EXISTING ITMS PATHWAY LOCATED ALONG SR 1 SOUTHBOUND AS SHOWN ON DWG. NOS. SS-01 THROUGH SS-07 SHALL OCCUR AS THE FIRST ORDER OF WORK. ALL WORK SHALL BE COMPLETE, OPERATIONAL, AND ACCEPTED BY DELDOT TRAFFIC PRIOR TO IMPACTING EXISTING PATHWAY.

2. PRIOR TO RELOCATION OF THE ITMS PATHWAY THE CONTRACTOR SHALL STAKEOUT THE LOCATION OF ALL PROPOSED GUARDRAIL, GUARDRAIL END TREATMENTS, SIGNS, STRUCTURES AND DRAINAGE FEATURES WITHIN THE LIMITS OF THE PROPOSED ITMS PATHWAY AND CHECK FOR CONFLICTS WITH THE PROPOSED ITMS CONDUIT. ANY AND ALL COSTS ASSOCIATED WITH REPAIRS OR RELOCATION OF THE NEW ITMS CONDUIT DUE TO CONFLICTS WITH OTHER PROPOSED WORK SHALL BE MADE AT THE EXPENSE OF THE CONTRACTOR.

ITMS CONDUIT RUN SCHEDULE

CO*	# OF CONDUITS	SIZE	LENGTH	B/T/O	AMOUNT AND TYPE OF CABLE/WIRE (SUPPLY AND INSTALLATION BY DELDOT FORCES)
4	2	4 IN	574 FT**	T	1-144S, 1-24S, & 1-48S
5	2	4 IN	102 FT	B	1-144S, 1-24S, & 1-48S
6	2	4 IN	591 FT**	T/B	1-144S, 1-24S, & 1-48S

*DENOTES EXISTING CONDUIT
**QUANTITY CONTINUES ON ADJACENT SHEET
***DENOTES CONDUIT INSTALLED BY DELDOT FORCES

B = BORE, T = TRENCH, O = OPEN CUT, BM = BRIDGE MOUNTED

NOTES:

1. CONSTRUCTION PHASE 1 CONDITIONS SHOWN.

ITMS LEGEND

- ITMS-CON – PROPOSED MULTIDUCT ITMS CONDUIT
- EX-ITS – EXISTING ITMS CONDUIT
- ITMS-CON – ITMS CONDUIT INSTALLED IN PHASE 1
- CA/X – ITMS CABINET AND IDENTIFIER
- ITMS CONDUIT JUNCTION WELL
- JW/X – JUNCTION WELL IDENTIFIER (TYPE) (EXISTING AND PROPOSED)
- CO/X – CONDUIT RUN IDENTIFIER (# OF RUN) (EXISTING AND PROPOSED)
- PB/X – POLE BASE IDENTIFIER (TYPE) (EXISTING AND PROPOSED)
- JB/X – PROPOSED CONCRETE BARRIER JUNCTION BOX IDENTIFIER (TYPE)
- RM/C – TO BE REMOVED BY CONTRACTOR
- AB – TO BE ABANDONED BY CONTRACTOR
- P – PROPOSED ELECTRICAL SERVICE ON PEDESTAL
- POLE BASE

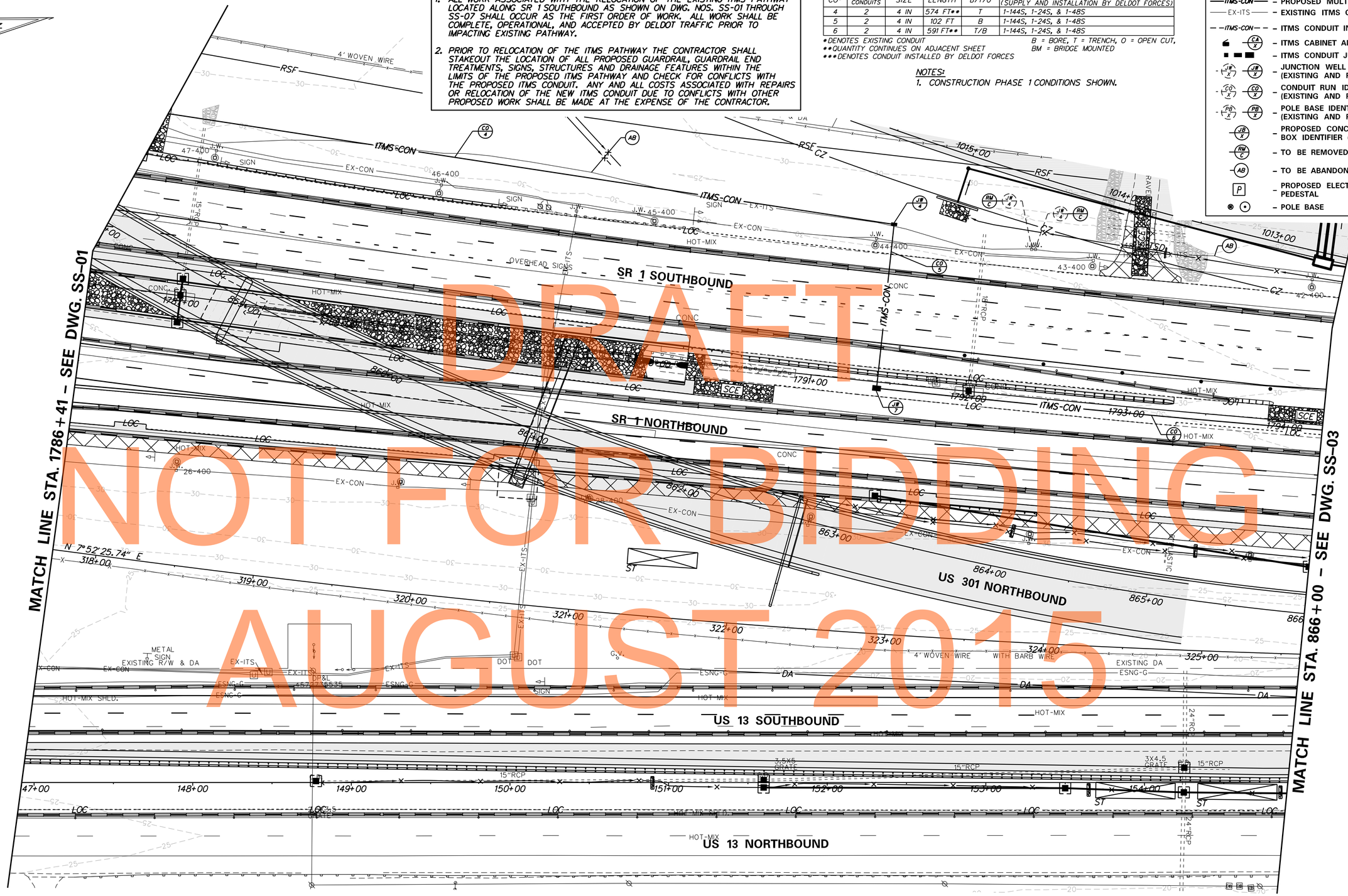

n:\3653-000\contract tb\cadd\SS002U301_1B.dgn
2/4/2015 1:59:28 PM

DELAWARE DEPARTMENT OF TRANSPORTATION	ADDENDUMS / REVISIONS	SCALE 0 30 60 90 FEET	US 301 & SR 1 INTERCHANGE	CONTRACT T200911302	BRIDGE NO. BR1-433, RW1-3	ITMS PATHWAY RELOCATION PLANS
				COUNTY NEW CASTLE	DESIGNED BY: J.H.R.	SIGNING, STRIPING & CONDUIT PLAN
					CHECKED BY: J.M.M.	

SS-02

SHEET NO. 451

TOTAL SHTS. 491

ITMS CONDUIT RUN SCHEDULE

CO#	# OF CONDUITS	SIZE	LENGTH	B/T/O	AMOUNT AND TYPE OF CABLE/WIRE (SUPPLY AND INSTALLATION BY DELDOT FORCES)
6	2	4 IN	591 FT**	T/B	1-144S, 1-24S, & 1-48S
7	2	4 IN	594 FT**	T	1-144S, 1-24S, & 1-48S

*DENOTES EXISTING CONDUIT
**QUANTITY CONTINUES ON ADJACENT SHEET
***DENOTES CONDUIT INSTALLED BY DELDOT FORCES

B = BORE, T = TRENCH, O = OPEN CUT, BM = BRIDGE MOUNTED

NOTES:
1. CONSTRUCTION PHASE 1 CONDITIONS SHOWN.

SPECIAL NOTES:

1. ALL WORK ASSOCIATED WITH THE RELOCATION OF THE EXISTING ITMS PATHWAY LOCATED ALONG SR 1 SOUTHBOUND AS SHOWN ON DWG. NOS. SS-01 THROUGH SS-07 SHALL OCCUR AS THE FIRST ORDER OF WORK. ALL WORK SHALL BE COMPLETE, OPERATIONAL, AND ACCEPTED BY DELDOT TRAFFIC PRIOR TO IMPACTING EXISTING PATHWAY.
2. PRIOR TO RELOCATION OF THE ITMS PATHWAY THE CONTRACTOR SHALL STAKEOUT THE LOCATION OF ALL PROPOSED GUARDRAIL, GUARDRAIL END TREATMENTS, SIGNS, STRUCTURES AND DRAINAGE FEATURES WITHIN THE LIMITS OF THE PROPOSED ITMS PATHWAY AND CHECK FOR CONFLICTS WITH THE PROPOSED ITMS CONDUIT. ANY AND ALL COSTS ASSOCIATED WITH REPAIRS OR RELOCATION OF THE NEW ITMS CONDUIT DUE TO CONFLICTS WITH OTHER PROPOSED WORK SHALL BE MADE AT THE EXPENSE OF THE CONTRACTOR.

ITMS LEGEND

- ITMS-CON – PROPOSED MULTIDUCT ITMS CONDUIT
- EX-ITS – EXISTING ITMS CONDUIT
- ITMS-CON – ITMS CONDUIT INSTALLED IN PHASE 1
- CA X – ITMS CABINET AND IDENTIFIER
- ITMS CONDUIT JUNCTION WELL
- JW X – JUNCTION WELL IDENTIFIER (TYPE) (EXISTING AND PROPOSED)
- CO X – CONDUIT RUN IDENTIFIER (# OF RUN) (EXISTING AND PROPOSED)
- PB X – POLE BASE IDENTIFIER (TYPE) (EXISTING AND PROPOSED)
- JB X – PROPOSED CONCRETE BARRIER JUNCTION BOX IDENTIFIER (TYPE)
- RM C – TO BE REMOVED BY CONTRACTOR
- AB – TO BE ABANDONED BY CONTRACTOR
- P – PROPOSED ELECTRICAL SERVICE ON PEDESTAL
- POLE BASE

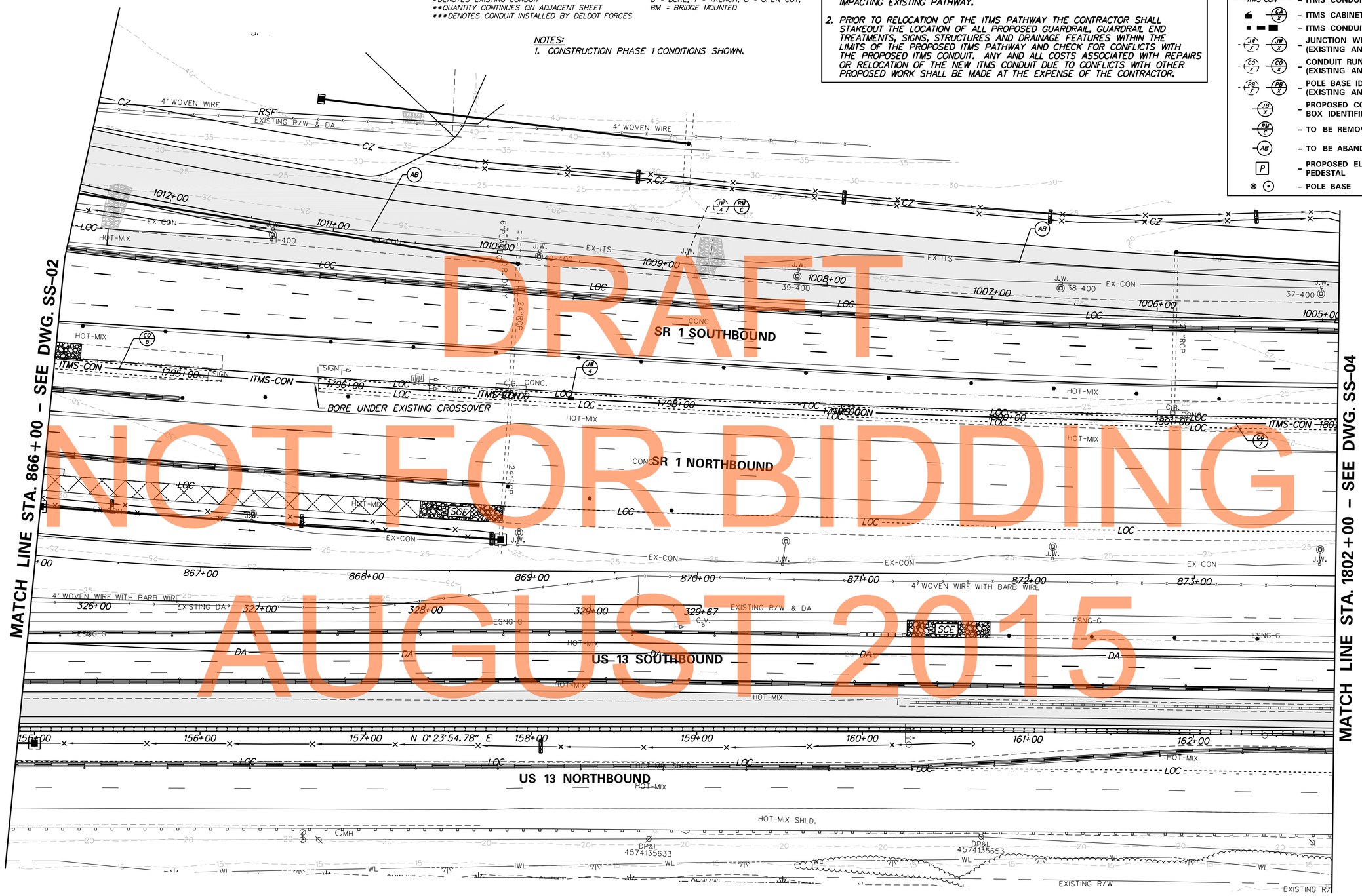

DELAWARE DEPARTMENT OF TRANSPORTATION	ADDENDUMS / REVISIONS	SCALE 0 30 60 90 FEET	US 301 & SR 1 INTERCHANGE	CONTRACT T200911302 / COUNTY NEW CASTLE	BRIDGE NO. / DESIGNED BY: J.H.R. / CHECKED BY: J.M.M.	ITMS PATHWAY RELOCATION PLANS / SIGNING, STRIPING & CONDUIT PLAN	SS-03 / SHEET NO. 452 / TOTAL SHTS. 491

n:\31653-000\contract tb\cadd\SS003U301_TB.dgn
2/4/2015 11:59:39 PM

NOTES:

1. PROPOSED CONDUITS SHALL BE RIGID GALVANIZED STEEL. INSTALL PROPOSED CONDUIT ON MEDIAN SIDE OF BRIDGE 1-903S USING A STAINLESS STEEL CHANNELIZED CONDUIT SUPPORT STRUT AND CONDUIT CLAMPS. EXPANSION COUPLINGS SHALL BE USED WHERE THE CONDUIT SPANS JOINTS IN THE BRIDGE STRUCTURE. THE CONDUIT SUPPORT STRUT SHALL BE INSTALLED APPROXIMATELY 2'-0" BELOW THE TOP OF THE PARAPET AND ANCHORED INTO THE CONCRETE USING AN ADHESIVE ANCHOR. THE CONDUIT SUPPORTS SHALL BE SPACED A MAXIMUM DISTANCE OF 15 FEET ON CENTER BETWEEN SUPPORTS AND SHALL BE LOCATED WITHIN 3 FEET OF EITHER SIDE OF ANY EXPANSION COUPLINGS, ELBOWS OR OTHER NECESSARY FITTINGS.

2. THE CONTRACTOR SHALL SUBMIT TO THE ENGINEER FOR APPROVAL SHOP DRAWINGS OF THE PROPOSED CONDUIT SUPPORT SYSTEM COMPONENTS INCLUDING RELEVANT LOAD CALCULATIONS AND PROPOSED SUPPORT LOCATIONS. PAYMENT FOR THE CONDUIT SUPPORT SYSTEM, INCLUDING SHOP DRAWING PREPARATION AND CALCULATIONS, WILL BE MADE UNDER THE INSTALLATION OF CONDUIT ON STRUCTURE ITEM.

3. CONSTRUCTION PHASE 1 CONDITIONS SHOWN.

ITMS CONDUIT RUN SCHEDULE

CO*	# OF CONDUITS	SIZE	LENGTH	B/T/O	AMOUNT AND TYPE OF CABLE/WIRE (SUPPLY AND INSTALLATION BY DELDOT FORCES)
7	2	4 IN	594 FT**	T	1-144S, 1-24S, & 1-48S
8	2	4 IN	591 FT	T	1-144S, 1-24S, & 1-48S
9	2	4 IN	176 FT**	BM	1-144S, 1-24S, & 1-48S

*DENOTES EXISTING CONDUIT
**QUANTITY CONTINUES ON ADJACENT SHEET
***DENOTES CONDUIT INSTALLED BY DELDOT FORCES

B = BORE, T = TRENCH, O = OPEN CUT, BM = BRIDGE MOUNTED

ITMS LEGEND

- ITMS-CON – PROPOSED MULTIDUCT ITMS CONDUIT
- EX-ITS – EXISTING ITMS CONDUIT
- ITMS-CON – ITMS CONDUIT INSTALLED IN PHASE 1
- CA X – ITMS CABINET AND IDENTIFIER
- ITMS CONDUIT JUNCTION WELL
- JW X / JB X – JUNCTION WELL IDENTIFIER (TYPE) (EXISTING AND PROPOSED)
- CO X / CO X – CONDUIT RUN IDENTIFIER (# OF RUN) (EXISTING AND PROPOSED)
- PB X / PB X – POLE BASE IDENTIFIER (TYPE) (EXISTING AND PROPOSED)
- JB X – PROPOSED CONCRETE BARRIER JUNCTION BOX IDENTIFIER (TYPE)
- RM C – TO BE REMOVED BY CONTRACTOR
- AB – TO BE ABANDONED BY CONTRACTOR
- P – PROPOSED ELECTRICAL SERVICE ON PEDESTAL
- POLE BASE

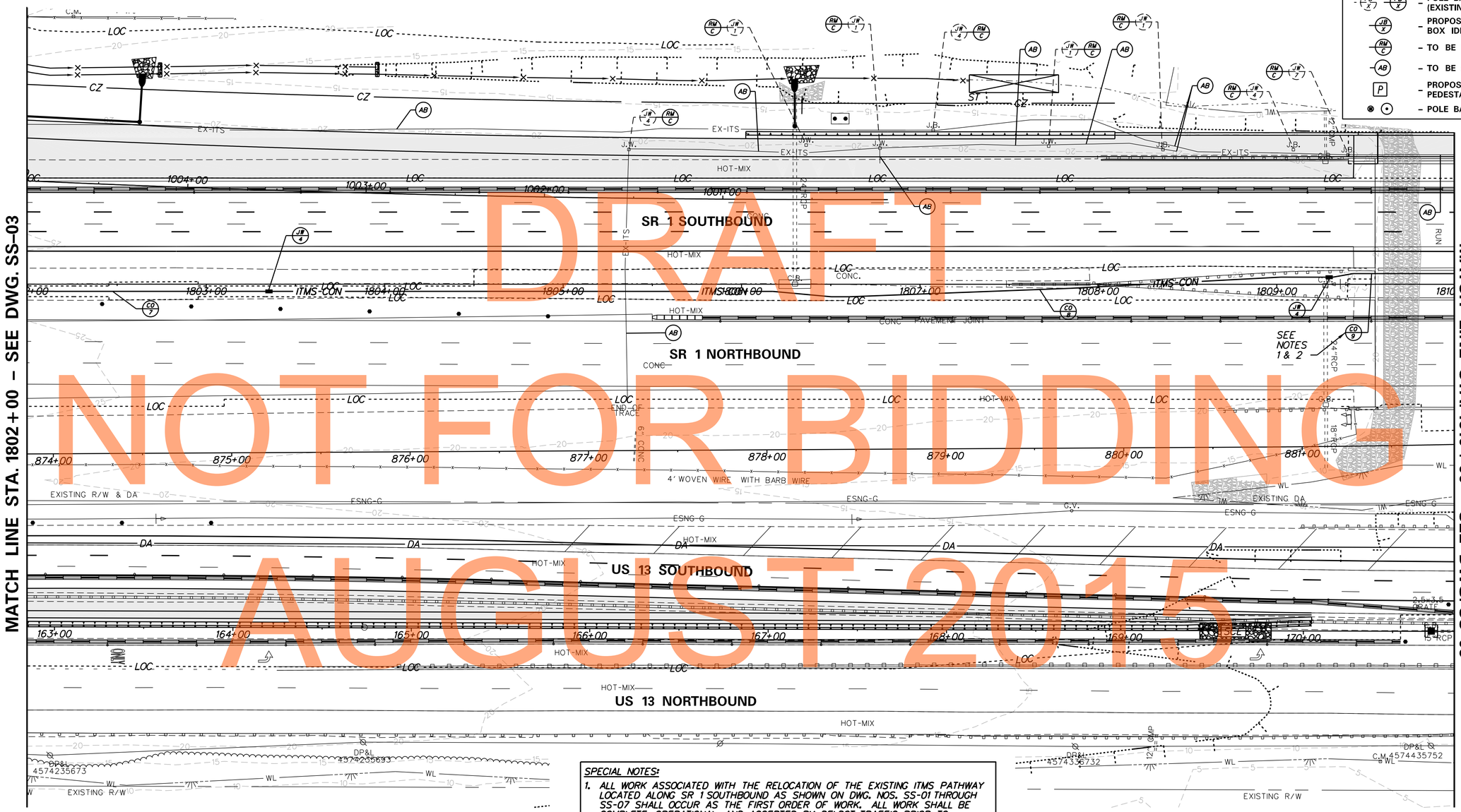

DRAFT
NOT FOR BIDDING
AUGUST 2015

SPECIAL NOTES:

1. ALL WORK ASSOCIATED WITH THE RELOCATION OF THE EXISTING ITMS PATHWAY LOCATED ALONG SR 1 SOUTHBOUND AS SHOWN ON DWG. NOS. SS-01 THROUGH SS-07 SHALL OCCUR AS THE FIRST ORDER OF WORK. ALL WORK SHALL BE COMPLETE, OPERATIONAL, AND ACCEPTED BY DELDOT TRAFFIC PRIOR TO IMPACTING EXISTING PATHWAY.

2. PRIOR TO RELOCATION OF THE ITMS PATHWAY THE CONTRACTOR SHALL STAKEOUT THE LOCATION OF ALL PROPOSED GUARDRAIL, GUARDRAIL END TREATMENTS, SIGNS, STRUCTURES AND DRAINAGE FEATURES WITHIN THE LIMITS OF THE PROPOSED ITMS PATHWAY AND CHECK FOR CONFLICTS WITH THE PROPOSED ITMS CONDUIT. ANY AND ALL COSTS ASSOCIATED WITH REPAIRS OR RELOCATION OF THE NEW ITMS CONDUIT DUE TO CONFLICTS WITH OTHER PROPOSED WORK SHALL BE MADE AT THE EXPENSE OF THE CONTRACTOR.

n:\31653-000\contract\tb\cadd\SS004U301_1B.dgn
2/4/2013 11:59:50 PM

DELAWARE DEPARTMENT OF TRANSPORTATION

ADDENDUMS / REVISIONS

SCALE 0 30 60 90 FEET

US 301 & SR 1 INTERCHANGE

CONTRACT	BRIDGE NO.	BR1-903N, BR1-903S & RW1-1
T200911302	DESIGNED BY: J.H.R.	
COUNTY		
NEW CASTLE	CHECKED BY: J.M.M.	

ITMS PATHWAY RELOCATION PLANS

SIGNING, STRIPING & CONDUIT PLAN

SS-04

SHEET NO. 453

TOTAL SHTS. 491

DRAFT
NOT FOR BIDDING
AUGUST 2015

ITMS LEGEND

- ITMS-CON – PROPOSED MULTIDUCT ITMS CONDUIT
- EX-ITS – EXISTING ITMS CONDUIT
- ITMS-CON – ITMS CONDUIT INSTALLED IN PHASE 1
- CA/X – ITMS CABINET AND IDENTIFIER
- ITMS CONDUIT JUNCTION WELL
- JW/X – JUNCTION WELL IDENTIFIER (TYPE) (EXISTING AND PROPOSED)
- CO/X – CONDUIT RUN IDENTIFIER (# OF RUN) (EXISTING AND PROPOSED)
- PB/X – POLE BASE IDENTIFIER (TYPE) (EXISTING AND PROPOSED)
- JB/X – PROPOSED CONCRETE BARRIER JUNCTION BOX IDENTIFIER (TYPE)
- RM/C – TO BE REMOVED BY CONTRACTOR
- AB – TO BE ABANDONED BY CONTRACTOR
- P – PROPOSED ELECTRICAL SERVICE ON PEDESTAL
- POLE BASE

SPECIAL NOTES:

1. ALL WORK ASSOCIATED WITH THE RELOCATION OF THE EXISTING ITMS PATHWAY LOCATED ALONG SR 1 SOUTHBOUND AS SHOWN ON DWG. NOS. SS-01 THROUGH SS-07 SHALL OCCUR AS THE FIRST ORDER OF WORK. ALL WORK SHALL BE COMPLETE, OPERATIONAL, AND ACCEPTED BY DELDOT TRAFFIC PRIOR TO IMPACTING EXISTING PATHWAY.
2. PRIOR TO RELOCATION OF THE ITMS PATHWAY THE CONTRACTOR SHALL STAKEOUT THE LOCATION OF ALL PROPOSED GUARDRAIL, GUARDRAIL END TREATMENTS, SIGNS, STRUCTURES AND DRAINAGE FEATURES WITHIN THE LIMITS OF THE PROPOSED ITMS PATHWAY AND CHECK FOR CONFLICTS WITH THE PROPOSED ITMS CONDUIT. ANY AND ALL COSTS ASSOCIATED WITH REPAIRS OR RELOCATION OF THE NEW ITMS CONDUIT DUE TO CONFLICTS WITH OTHER PROPOSED WORK SHALL BE MADE AT THE EXPENSE OF THE CONTRACTOR.

ITMS CONDUIT RUN SCHEDULE

CO*	# OF CONDUITS	SIZE	LENGTH	B/T/O	AMOUNT AND TYPE OF CABLE/WIRE (SUPPLY AND INSTALLATION BY DELDOT FORCES)
9	2	4 IN	176 FT**	BM	1-144S, 1-24S, & 1-48S
10	2	4 IN	530 FT	T/O	1-144S, 1-24S, & 1-48S
11	2	4 IN	527 FT**	T/B	1-144S, 1-24S, & 1-48S

*DENOTES EXISTING CONDUIT
**QUANTITY CONTINUES ON ADJACENT SHEET
***DENOTES CONDUIT INSTALLED BY DELDOT FORCES

B = BORE, T = TRENCH, O = OPEN CUT, BM = BRIDGE MOUNTED

NOTES:

1. PROPOSED CONDUITS SHALL BE RIGID GALVANIZED STEEL. INSTALL PROPOSED CONDUIT ON MEDIAN SIDE OF BRIDGE 1-903S USING A STAINLESS STEEL CHANNELIZED CONDUIT SUPPORT STRUT AND CONDUIT CLAMPS. EXPANSION COUPLINGS SHALL BE USED WHERE THE CONDUIT SPANS JOINTS IN THE BRIDGE STRUCTURE. THE CONDUIT SUPPORT STRUT SHALL BE INSTALLED APPROXIMATELY 2'-0" BELOW THE TOP OF THE PARAPET AND ANCHORED INTO THE CONCRETE USING AN ADHESIVE ANCHOR. THE CONDUIT SUPPORTS SHALL BE SPACED A MAXIMUM DISTANCE OF 15 FEET ON CENTER BETWEEN SUPPORTS AND SHALL BE LOCATED WITHIN 3 FEET OF EITHER SIDE OF ANY EXPANSION COUPLINGS, ELBOWS OR OTHER NECESSARY FITTINGS.
2. THE CONTRACTOR SHALL SUBMIT TO THE ENGINEER FOR APPROVAL SHOP DRAWINGS OF THE PROPOSED CONDUIT SUPPORT SYSTEM COMPONENTS INCLUDING RELEVANT LOAD CALCULATIONS AND PROPOSED SUPPORT LOCATIONS. PAYMENT FOR THE CONDUIT SUPPORT SYSTEM, INCLUDING SHOP DRAWING PREPARATION AND CALCULATIONS, WILL BE MADE UNDER THE INSTALLATION OF CONDUIT ON STRUCTURE ITEM.
3. CONDUIT SHALL BE INSTALLED A MINIMUM OF 36" BELOW FINISHED GRADE TO AVOID IMPACTS DURING CONSTRUCTION AND REMOVAL OF TEMPORARY PAVEMENT. COST OF INSTALLING CONDUIT AT ADDITIONAL DEPTH WILL NOT BE MEASURED AND PAID FOR BUT WILL BE INCIDENTAL TO THE PERTINENT CONDUIT INSTALLATION ITEM.
4. CONSTRUCTION PHASE 1 CONDITIONS SHOWN.

DELAWARE DEPARTMENT OF TRANSPORTATION

ADDENDUMS / REVISIONS

SCALE 0 30 60 90 FEET

US 301 & SR 1 INTERCHANGE

CONTRACT	BRIDGE NO.	BR1-903N, BR1-903S & RW1-1
T200911302	DESIGNED BY: J.H.R.	
COUNTY		
NEW CASTLE	CHECKED BY: J.M.M.	

ITMS PATHWAY RELOCATION PLANS

SIGNING, STRIPING & CONDUIT PLAN

SS-05

SHEET NO. 454

TOTAL SHTS. 491

n:\3653-000\cont\cgl tb\cadd\SS005U301_IB.dgn 2/4/2013 1:39:59 PM

NOTES:

1. TERMINATE PROPOSED CONDUIT AT EXISTING JUNCTION WELL TO REESTABLISH COMMUNICATIONS FOR EXISTING CCTV CAMERA. COORDINATE WORK WITH DELDOT TRAFFIC. PROVIDE 4 WEEKS NOTICE. REPAIR EXISTING JUNCTION WELL.
2. CONDUIT SHALL BE INSTALLED A MINIMUM OF 36" BELOW FINISHED GRADE TO AVOID IMPACTS DURING CONSTRUCTION AND REMOVAL OF TEMPORARY PAVEMENT. COST OF INSTALLING CONDUIT AT ADDITIONAL DEPTH WILL NOT BE MEASURED AND PAID FOR BUT WILL BE INCIDENTAL TO THE PERTINENT CONDUIT INSTALLATION ITEM.
3. CONSTRUCTION PHASE 1 CONDITIONS SHOWN.

ITMS CONDUIT RUN SCHEDULE

CO*	# OF CONDUITS	SIZE	LENGTH	B/T/O	AMOUNT AND TYPE OF CABLE/WIRE (SUPPLY AND INSTALLATION BY DELDOT FORCES)
11	2	4 IN	527 FT**	T/B	1-144S, 1-24S, & 1-48S
12	2	4 IN	485 FT**	T	1-144S, 1-24S, & 1-48S
14	1	4 IN	411 FT**	T	1-12S

*DENOTES EXISTING CONDUIT
**QUANTITY CONTINUES ON ADJACENT SHEET
***DENOTES CONDUIT INSTALLED BY DELDOT FORCES

B = BORE, T = TRENCH, O = OPEN CUT, BM = BRIDGE MOUNTED

SPECIAL NOTES:

1. ALL WORK ASSOCIATED WITH THE RELOCATION OF THE EXISTING ITMS PATHWAY LOCATED ALONG SR 1 SOUTHBOUND AS SHOWN ON DWG. NOS. SS-01 THROUGH SS-07 SHALL OCCUR AS THE FIRST ORDER OF WORK. ALL WORK SHALL BE COMPLETE, OPERATIONAL, AND ACCEPTED BY DELDOT TRAFFIC PRIOR TO IMPACTING EXISTING PATHWAY.
2. PRIOR TO RELOCATION OF THE ITMS PATHWAY THE CONTRACTOR SHALL STAKEOUT THE LOCATION OF ALL PROPOSED GUARDRAIL, GUARDRAIL END TREATMENTS, SIGNS, STRUCTURES AND DRAINAGE FEATURES WITHIN THE LIMITS OF THE PROPOSED ITMS PATHWAY AND CHECK FOR CONFLICTS WITH THE PROPOSED ITMS CONDUIT. ANY AND ALL COSTS ASSOCIATED WITH REPAIRS OR RELOCATION OF THE NEW ITMS CONDUIT DUE TO CONFLICTS WITH OTHER PROPOSED WORK SHALL BE MADE AT THE EXPENSE OF THE CONTRACTOR.

ITMS LEGEND

- ITMS-CON – PROPOSED MULTIDUCT ITMS CONDUIT
- EX-ITS – EXISTING ITMS CONDUIT
- ITMS-CON – ITMS CONDUIT INSTALLED IN PHASE 1
- CA/X – ITMS CABINET AND IDENTIFIER
- ITMS CONDUIT JUNCTION WELL
- JW/X, JB/X – JUNCTION WELL IDENTIFIER (TYPE) (EXISTING AND PROPOSED)
- CO/X, CO/X – CONDUIT RUN IDENTIFIER (# OF RUN) (EXISTING AND PROPOSED)
- PB/X, PB/X – POLE BASE IDENTIFIER (TYPE) (EXISTING AND PROPOSED)
- JB/X – PROPOSED CONCRETE BARRIER JUNCTION BOX IDENTIFIER (TYPE)
- RW/C – TO BE REMOVED BY CONTRACTOR
- AB – TO BE ABANDONED BY CONTRACTOR
- P – PROPOSED ELECTRICAL SERVICE ON PEDESTAL
- POLE BASE

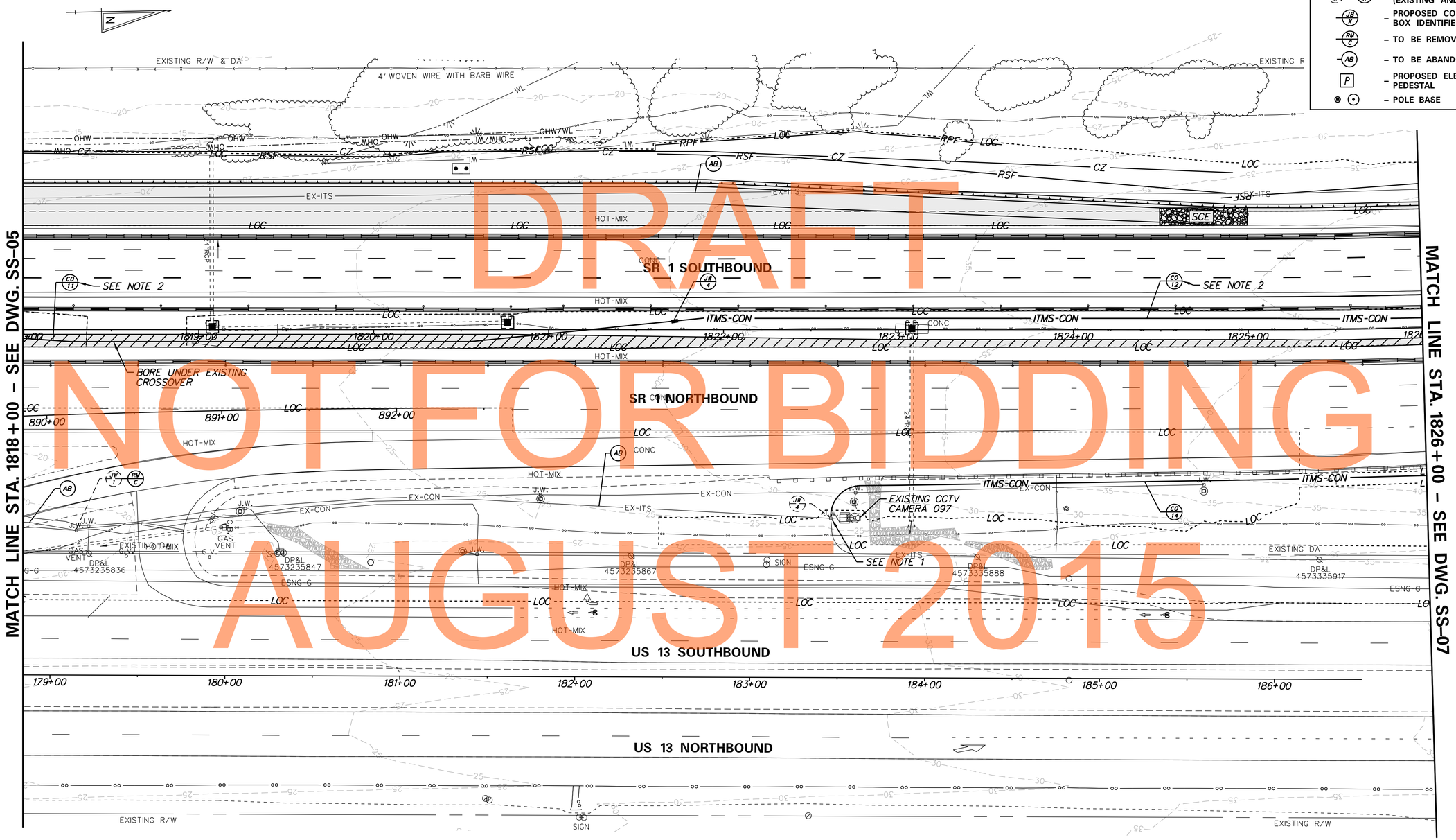

DRAFT
NOT FOR BIDDING
AUGUST 2015

DELAWARE DEPARTMENT OF TRANSPORTATION

ADDENDUMS / REVISIONS

SCALE 0 30 60 90 FEET

US 301 & SR 1 INTERCHANGE

CONTRACT	BRIDGE NO.
T200911302	DESIGNED BY: J.H.R.
COUNTY	CHECKED BY: J.M.M.
NEW CASTLE	

ITMS PATHWAY RELOCATION PLANS

SIGNING, STRIPING & CONDUIT PLAN

SS-06

SHEET NO. 455

TOTAL SHTS. 491

n:\3653-000\contract lb\cadd\SS006U301_1B.dgn 2/4/2015 2:00:15 PM

NOTES:

1. THE CONTRACTOR SHALL REMOVE THE EXISTING TYPE 4 JUNCTION WELL AND INSTALL A TYPE 7 JUNCTION WELL IN THE SAME LOCATION. COORDINATE REMOVAL AND INSTALLATION OF JUNCTION WELLS WITH DELDOT TRAFFIC. PROVIDE 4 WEEKS NOTICE.
2. CONDUIT SHALL BE INSTALLED A MINIMUM OF 36" BELOW FINISHED GRADE TO AVOID IMPACTS DURING CONSTRUCTION AND REMOVAL OF TEMPORARY PAVEMENT. COST OF INSTALLING CONDUIT AT ADDITIONAL DEPTH WILL NOT BE MEASURED AND PAID FOR BUT WILL BE INCIDENTAL TO THE PERTINENT CONDUIT INSTALLATION ITEM.
3. CONSTRUCTION PHASE 1 CONDITIONS SHOWN.
4. INSTALL MODIFIED CABINET BASE FOR TYPE F CABINET BY OTHERS (SEE DETAIL THIS SHEET).

SPECIAL NOTES:

1. ALL WORK ASSOCIATED WITH THE RELOCATION OF THE EXISTING ITMS PATHWAY LOCATED ALONG SR 1 SOUTHBOUND AS SHOWN ON DWG. NOS. SS-01 THROUGH SS-07 SHALL OCCUR AS THE FIRST ORDER OF WORK. ALL WORK SHALL BE COMPLETE, OPERATIONAL, AND ACCEPTED BY DELDOT TRAFFIC PRIOR TO IMPACTING EXISTING PATHWAY.
2. PRIOR TO RELOCATION OF THE ITMS PATHWAY THE CONTRACTOR SHALL STAKEOUT THE LOCATION OF ALL PROPOSED GUARDRAIL, GUARDRAIL END TREATMENTS, SIGNS, STRUCTURES AND DRAINAGE FEATURES WITHIN THE LIMITS OF THE PROPOSED ITMS PATHWAY AND CHECK FOR CONFLICTS WITH THE PROPOSED ITMS CONDUIT. ANY AND ALL COSTS ASSOCIATED WITH REPAIRS OR RELOCATION OF THE NEW ITMS CONDUIT DUE TO CONFLICTS WITH OTHER PROPOSED WORK SHALL BE MADE AT THE EXPENSE OF THE CONTRACTOR.

ITMS CONDUIT RUN SCHEDULE

CO*	# OF CONDUITS	SIZE	LENGTH	B/T/O	AMOUNT AND TYPE OF CABLE/WIRE (SUPPLY AND INSTALLATION BY DELDOT FORCES)
12	2	4 IN	485 FT**	T	1-144S, 1-24S, & 1-48S
13	2	4 IN	72 FT	B	1-144S, 1-24S, & 1-48S
14	1	4 IN	411 FT**	T	1-12S
15	1	4 IN	89 FT	B	1-12S
20*	1	4 IN	913 FT	-	1-144S, 1-24S, & 1-48S
58	6	4 IN	9 FT	T	COMMUNICATION CABLES

*DENOTES EXISTING CONDUIT
**QUANTITY CONTINUES ON ADJACENT SHEET
***DENOTES CONDUIT INSTALLED BY DELDOT FORCES

B = BORE, T = TRENCH, O = OPEN CUT, BM = BRIDGE MOUNTED

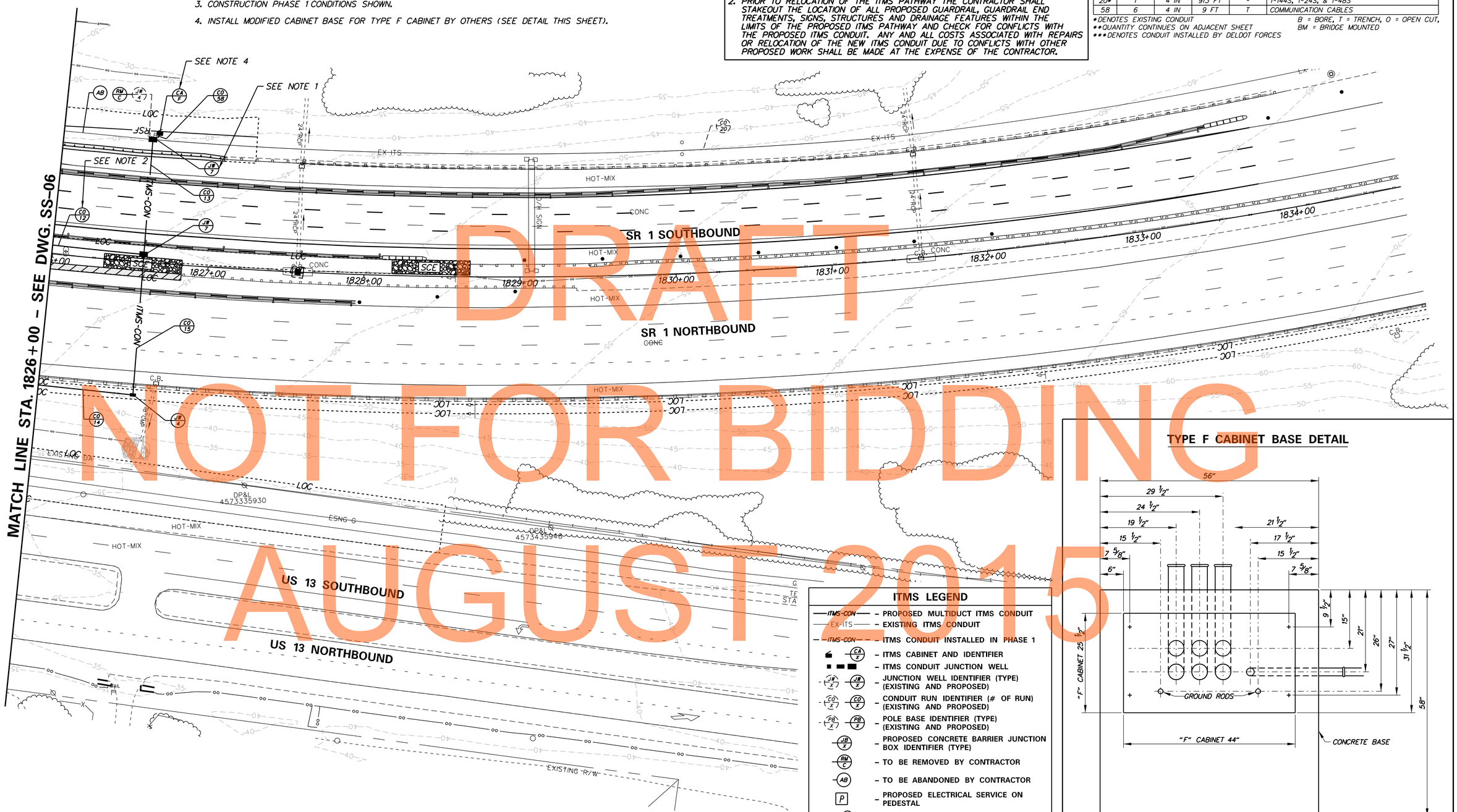

ITMS LEGEND

- ITMS-CON – PROPOSED MULTIDUCT ITMS CONDUIT
- EX-ITS – EXISTING ITMS CONDUIT
- ITMS-CON – ITMS CONDUIT INSTALLED IN PHASE 1
- CA X – ITMS CABINET AND IDENTIFIER
- ITMS CONDUIT JUNCTION WELL
- JB X – JUNCTION WELL IDENTIFIER (TYPE) (EXISTING AND PROPOSED)
- CO X – CONDUIT RUN IDENTIFIER (# OF RUN) (EXISTING AND PROPOSED)
- PB X – POLE BASE IDENTIFIER (TYPE) (EXISTING AND PROPOSED)
- JB X – PROPOSED CONCRETE BARRIER JUNCTION BOX IDENTIFIER (TYPE)
- RM C – TO BE REMOVED BY CONTRACTOR
- AB – TO BE ABANDONED BY CONTRACTOR
- P – PROPOSED ELECTRICAL SERVICE ON PEDESTAL
- POLE BASE

TYPE F CABINET BASE DETAIL

ITMS PATHWAY RELOCATION PLANS

SS-07

DELAWARE DEPARTMENT OF TRANSPORTATION

ADDENDUMS / REVISIONS

SCALE 0 30 60 90 FEET

US 301 & SR 1 INTERCHANGE

CONTRACT	BRIDGE NO.
T200911302	DESIGNED BY: J.H.R.
COUNTY	CHECKED BY: J.M.M.
NEW CASTLE	

SIGNING, STRIPING & CONDUIT PLAN

SHEET NO. 456

TOTAL SHTS. 491

n:\3653-000\contract lb\cadd\SS007\J301_1B.dgn
2/4/2015 2:06:31 PM

SIGNING, STRIPING AND CONDUIT PLAN GENERAL NOTES:

1. THE CONTRACTOR SHALL INSTALL AND REMOVE ALL REGULATORY, WARNING AND SPECIAL SIGNS AND SIGN POSTS WITHIN THE CONTRACT LIMITS, AS SHOWN. DELDOT SHALL FURNISH AND SUPPLY THE STANDARD REGULATORY AND WARNING SIGNS AND STANDARD SIGN POSTS TO THE CONTRACTOR FOR INSTALLATION. FOR COORDINATION AND PICK-UP OF SIGNS AND POSTS THE CONTRACTOR SHALL CONTACT DELDOT'S SIGN SHOP AT (302) 760-2581. ALLOW SIX WEEKS FOR SIGN FABRICATION.
2. THE CONTRACTOR SHALL FURNISH AND INSTALL ALL NON-STANDARD SIGNS SHOWN ON THE GUIDE SIGN DIMENSIONS AND DETAILS SHEETS AND ALL STEEL BEAM SIGN SUPPORTS AS SHOWN ON PLANS.
3. UNLESS OTHERWISE NOTED, THE CONTRACTOR SHALL FURNISH AND INSTALL ALL CONDUIT, JUNCTION WELLS, POLE BASES AND CABINET BASES FOR ITMS DEVICES. DELDOT FORCES TO FURNISH AND INSTALL ALL ELECTRICAL AND COMMUNICATION CABLES, ELECTRICAL SERVICE FEEDS, CABINETS AND ITMS DEVICES (RTMS, RWIS, CCTV AND VARIABLE SPEED LIMIT SIGNS).
4. INSTALLATION OF GROUND MOUNT SIGNS ON DELDOT SUPPLIED STANDARD SIGN POSTS SHALL BE PAID FOR UNDER ITEM NOS. 749687 - INSTALLATION OR REMOVAL OF TRAFFIC SIGN(S) ON SINGLE SIGN POST AND 749690 - INSTALLATION OR REMOVAL OF TRAFFIC SIGNS ON MULTIPLE SIGN POSTS. INSTALLATION OF GROUND MOUNT SIGNS ON STEEL BEAM SIGN SUPPORTS SHALL BE PAID FOR UNDER ITEM NO. 749556 - INSTALLATION OF SIGN ON GROUND MOUNT POSTS.
5. ALL CONCRETE FOUNDATIONS FOR SIGN STRUCTURES AND GROUND MOUNTED SIGNS DESIGNATED TO BE REMOVED SHALL BE REMOVED 1' BELOW FINAL GRADE.
6. ALL UNDERGROUD CONDUITS FOR ITMS SHALL BE SCHEDULE 80 RIGID PVC WHEN INSTALLED BY TRENCHING AND SDR-13.5 HDPE WHEN INSTALLED BY BORING UNLESS OTHERWISE NOTED.

NOTES:

1. PLOWABLE RAISED PAVEMENT MARKERS (RPMS) SHALL BE INSTALLED THROUGHOUT THE LIMITS OF THE PROPOSED PAVEMENT STRIPING AS PER FIGURES 3B-15A THROUGH 3B-15H OF THE DELAWARE MUTCD, AS APPLICABLE BELOW:
   - IN AREAS WHERE NEW LANES HAVE BEEN ADDED INSTALL RPMS AS NOTED ABOVE.
   - IN AREAS WHERE EXISTING LENSES WERE REMOVED DURING CONSTRUCTION PHASING, NEW LENSES ONLY SHALL BE INSTALLED IN THOSE AEAS WHERE PROPOSED STRIPING MATCHES EXISTING.
   - IN AREAS WHERE RPMS EXISTED PREVIOUSLY, BUT LANES HAVE NOW BEEN REMOVED IN THE ULTIMATE CONFIGURATION THE RPM HOUSING SHALL REMAIN WITH NO NEW LENS INSTALLED.
2. INSTALL POST MOUNTED AND/OR BARRIER MOUNTED DELINEATORS ALONG THE LIMITS OF THE PROPOSED CONSTRUCTION AS PER PART 3 OF THE DELAWARE MUTCD.
3. DELDOT FORCES TO PROVIDE DISCONNECT SWITCH PRIOR TO ITMS EQUIPMENT.
4. PROPOSED RTMS ON 40' STEEL POLE FOR SOUTHBOUND US 301 DETECTION (RTMS DEVICE, CABINET AND POLE BY DELDOT FORCES).
5. PROPOSED RWIS ON 30' ALUMINUM POLE (RWIS DEVICE, CABINET AND POLE BY DELDOT FORCES). RWIS CABINET SHALL BE EQUIPPED WITH A 240V TO 120V CURRENT TRANSFORMER.
6. PROPOSED RTMS ON 40' STEEL POLE FOR NORTHBOUND US 301 DETECTION (RTMS DEVICE, CABINET AND POLE BY DELDOT FORCES).
7. A 2P (240V) CIRCUIT BREAKER SHALL BE PROVIDED FOR THE DEDICATED RWIS CIRCUIT.
8. CONDUIT RUN NOS. 22, 24, 29, 30, 32 & 36 SHALL BE RIGID GALVANIZED STEEL INSTALLED BY DELDOT FORCES.

SIGNING LEGEND

①	REMOVE EXISTING SIGN
②	EXISTING SIGN TO REMAIN
③	PLACE NEW SIGN
④	RENEW EXISTING SIGN
⑤	REPOSITION EXISTING SIGN

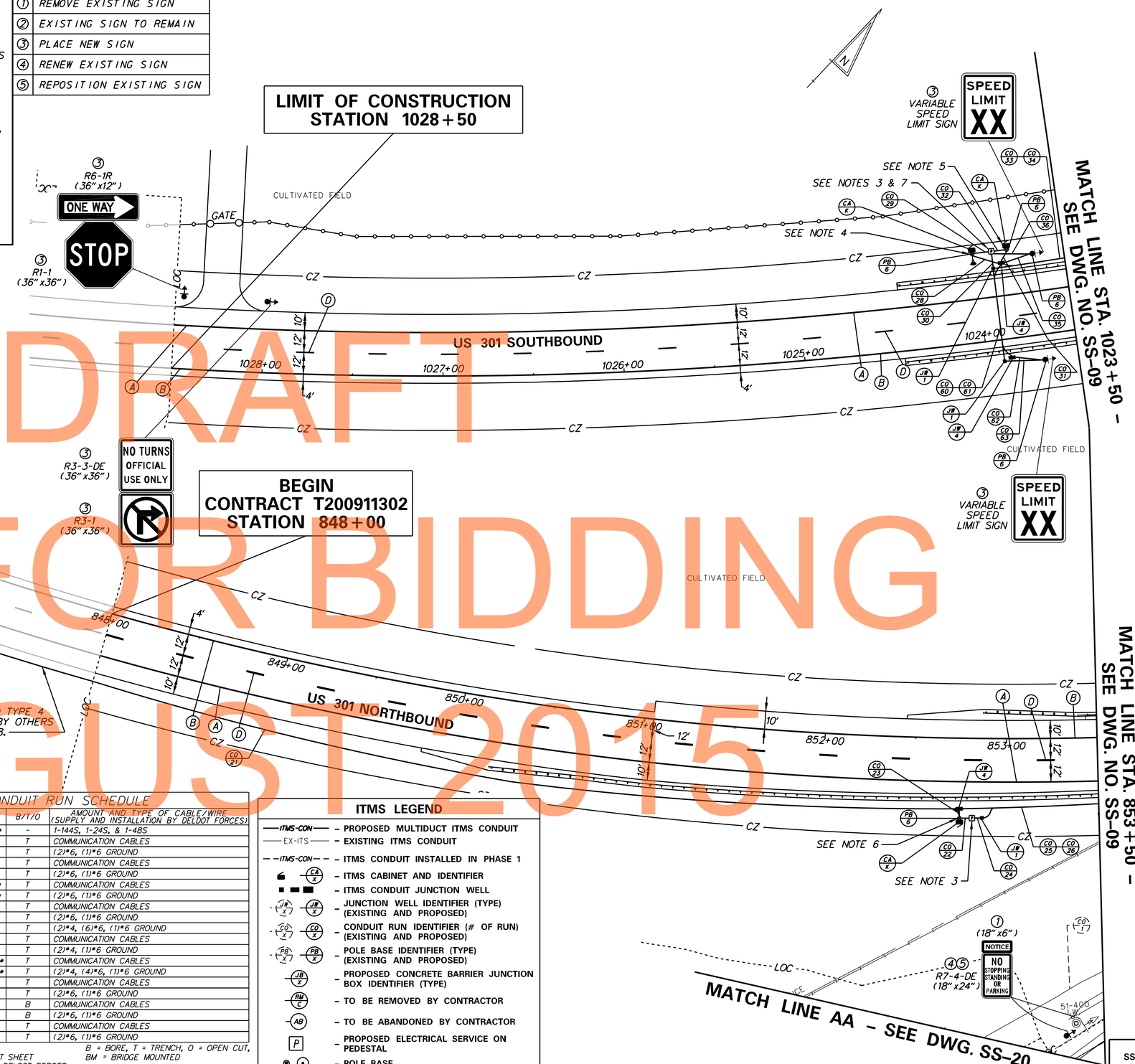

SIGNS TO BE INSTALLED BY OTHERS UNDER CONTRACT T200911308

TIE PROPOSED CONDUIT INTO TYPE 4 JUNCTION WELL PROPOSED BY OTHERS IN CONTRACT NO. T200911308.

PAVEMENT MARKINGS LEGEND

SYMBOL	ITEM		QUANTITY
(A)	8" SOLID WHITE CONTRAST EPOXY RESIN PAINT, 3"BLACK, 5"WHITE	ITEM 748557	1050 LF
		ITEM 748548	1050 LF
(B)	5" SOLID YELLOW EPOXY RESIN PAINT (ITEM 748548)		1050 LF
(C)	13" DOTTED WHITE RETROREFLECTIVE PREFORMED PATTERNED CONTRAST PAVEMENT MARKINGS, 3' LINE & 9' GAP, 1.5"BLACK, 10"WHITE, 1.5"BLACK (ITEM 748567)		0 LF
(D)	8" BROKEN WHITE RETROREFLECTIVE PREFORMED PATTERNED CONTRAST PAVEMENT MARKINGS, 10' LINE & 30' GAP, 1.5"BLACK, 5"WHITE, 1.5"BLACK (ITEM 748566)		260 LF
(E)	RETROREFLECTIVE PREFORMED PATTERNED MARKINGS, SYMBOL/LEGEND (ITEM 748529)		0 SF
(F)	12" SOLID WHITE EPOXY RESIN PAINT (ITEM 748509)		0 LF
(G)	12" SOLID WHITE RETROREFLECTIVE PREFORMED PATTERNED MARKINGS (ITEM NO. 748513)		0 LF
(H)	5" SOLID WHITE EPOXY RESIN PAINT (ITEM 748548)		0 LF
(J)	5" BROKEN WHITE EPOXY RESIN PAINT PERMANENT PAVEMENT STRIPING, 10' LINE, 30' GAP (ITEM 748548)		0 LF
(K)	5" BROKEN WHITE EPOXY RESIN PAINT PERMANENT PAVEMENT STRIPING, 3' LINE, 9' GAP (ITEM 748548)		0 LF
(L)	PERMANENT PAVEMENT STRIPING, SYMBOL/LEGEND, ALKYD THERMOPLASTIC (ITEM 748015)		0 SF
(M)	10" SOLID WHITE EPOXY RESIN PAINT (ITEM 748549)		0 LF
(RM/C)	REMOVE EXISTING PAVEMENT STRIPING BY CONTRACTOR (ITEM 748530)		0 SF

ITMS CONDUIT RUN SCHEDULE

CO*	# OF CONDUITS	SIZE	LENGTH	B/T/O	AMOUNT AND TYPE OF CABLE/WIRE (SUPPLY AND INSTALLATION BY DELDOT FORCES)
1*	1	4 IN	371 FT**	-	1-144S, 1-24S, & 1-48S
21	1	4 IN	542 FT	T	COMMUNICATION CABLES
22***	1	2 IN	5 FT	T	(2)*6, (1)*6 GROUND
23	1	2.5 IN	4 FT	T	COMMUNICATION CABLES
24***	1	2 IN	3 FT	T	(2)*6, (1)*6 GROUND
25	1	4 IN	93 FT**	T	COMMUNICATION CABLES
26	1	2 IN	93 FT**	T	(2)*6, (1)*6 GROUND
28	1	2.5 IN	15 FT	T	COMMUNICATION CABLES
29***	1	2 IN	9 FT	T	(2)*6, (1)*6 GROUND
30***	1	2 IN	7 FT	T	(2)*4, (6)*6, (1)*6 GROUND
31	1	2.5 IN	7 FT	T	COMMUNICATION CABLES
32***	1	2 IN	6 FT	T	(2)*4, (1)*6 GROUND
33	1	4 IN	230 FT**	T	COMMUNICATION CABLES
34	1	2 IN	230 FT**	T	(2)*4, (4)*6, (1)*6 GROUND
35	1	2.5 IN	15 FT	T	COMMUNICATION CABLES
36***	1	2 IN	20 FT	T	(2)*6, (1)*6 GROUND
60	1	4 IN	54 FT	B	COMMUNICATION CABLES
61	1	2 IN	50 FT	B	(2)*6, (1)*6 GROUND
62	1	2.5 IN	15 FT	T	COMMUNICATION CABLES
63	1	2 IN	20 FT	T	(2)*6, (1)*6 GROUND

*DENOTES EXISTING CONDUIT
**QUANTITY CONTINUES ON ADJACENT SHEET
***DENOTES CONDUIT INSTALLED BY DELDOT FORCES

B = BORE, T = TRENCH, O = OPEN CUT, BM = BRIDGE MOUNTED

ITMS LEGEND

- ITMS-CON – PROPOSED MULTIDUCT ITMS CONDUIT
- EX-ITS – EXISTING ITMS CONDUIT
- ITMS-CON – ITMS CONDUIT INSTALLED IN PHASE 1
- CA/X – ITMS CABINET AND IDENTIFIER
- ITMS CONDUIT JUNCTION WELL
- JW/X – JUNCTION WELL IDENTIFIER (TYPE) (EXISTING AND PROPOSED)
- CO/X – CONDUIT RUN IDENTIFIER (# OF RUN) (EXISTING AND PROPOSED)
- PB/X – POLE BASE IDENTIFIER (TYPE) (EXISTING AND PROPOSED)
- JB/X – PROPOSED CONCRETE BARRIER JUNCTION BOX IDENTIFIER (TYPE)
- RM/C – TO BE REMOVED BY CONTRACTOR
- AB – TO BE ABANDONED BY CONTRACTOR
- P – PROPOSED ELECTRICAL SERVICE ON PEDESTAL
- POLE BASE

DRAFT
NOT FOR BIDDING
AUGUST 2015

DELAWARE DEPARTMENT OF TRANSPORTATION

ADDENDUMS / REVISIONS

SCALE 0 30 60 90 FEET

US 301 & SR 1 INTERCHANGE

CONTRACT	BRIDGE NO.	BR1-433
T200911302	DESIGNED BY: J.H.R.	
COUNTY		
NEW CASTLE	CHECKED BY: J.M.M.	

SIGNING, STRIPING & CONDUIT PLAN

SS-08

SHEET NO.	TOTAL SHTS.
457	491

rt\3653-000\contract_tb\cadd\SS008U301_IB.dgn
2/4/2015 2:00:42 PM

ITMS CONDUIT RUN SCHEDULE

CO*	# OF CONDUITS	SIZE	LENGTH	B/T/O	AMOUNT AND TYPE OF CABLE/WIRE (SUPPLY AND INSTALLATION BY DELDOT FORCES)
1*	2	4 IN	371 FT**	-	1-144S, 1-24S, & 1-48S
2*	2	4 IN	160 FT	-	1-144S, 1-24S, & 1-48S
3*	2	4 IN	120 FT	-	1-144S, 1-24S, & 1-48S
4*	2	4 IN	574 FT**	-	1-144S, 1-24S, & 1-48S
16	2	2.5 IN	4 FT	T	POWER AND COMMUNICATION CABLES
25	1	4 IN	93 FT**	T	COMMUNICATION CABLES
26	1	2 IN	93 FT**	T	(2)#6, (1)#6 GROUND
33	1	4 IN	230 FT**	T	COMMUNICATION CABLES
34	1	2 IN	230 FT**	T	(2)#4, (4)#6, (1)#6 GROUND
37	1	4 IN	55 FT	B	COMMUNICATION CABLES
38	1	2 IN	60 FT	B	(2)#4, (4)#6, (1)#6 GROUND
39	1	4 IN	140 FT	T	COMMUNICATION CABLES
40	1	2 IN	145 FT	T	(2)#4, (4)#6, (1)#6 GROUND
41*	2	2 IN	160 FT	-	(2)#4, (4)#6, (1)#6 GROUND
42	1	2 IN	116 FT**	B	(2)#4, (8)#6, (1)#6 GROUND
43	1	4 IN	148 FT	T	COMMUNICATION CABLES
44	1	2 IN	148 FT	T	(4)#6, (1)#6 GROUND
45***	1	2 IN	3 FT	T	(2)#6, (1)#6 GROUND
46***	1	2 IN	5 FT	T	(2)#6, (1)#6 GROUND
47	1	2.5 IN	11 FT	T	COMMUNICATION CABLES

*DENOTES EXISTING CONDUIT
**QUANTITY CONTINUES ON ADJACENT SHEET
***DENOTES CONDUIT INSTALLED BY DELDOT FORCES

B = BORE, T = TRENCH, O = OPEN CUT, BM = BRIDGE MOUNTED

SIGNING LEGEND

1	REMOVE EXISTING SIGN
2	EXISTING SIGN TO REMAIN
3	PLACE NEW SIGN
4	RENEW EXISTING SIGN
5	REPOSITION EXISTING SIGN

ITMS LEGEND

- ITMS-CON – PROPOSED MULTIDUCT ITMS CONDUIT
- EX-ITS – EXISTING ITMS CONDUIT
- ITMS-CON – ITMS CONDUIT INSTALLED IN PHASE 1
- CA X – ITMS CABINET AND IDENTIFIER
- ITMS CONDUIT JUNCTION WELL
- JW X – JUNCTION WELL IDENTIFIER (TYPE) (EXISTING AND PROPOSED)
- CO X – CONDUIT RUN IDENTIFIER (# OF RUN) (EXISTING AND PROPOSED)
- PB X – POLE BASE IDENTIFIER (TYPE) (EXISTING AND PROPOSED)
- JB X – PROPOSED CONCRETE BARRIER JUNCTION BOX IDENTIFIER (TYPE)
- RM C – TO BE REMOVED BY CONTRACTOR
- AB – TO BE ABANDONED BY CONTRACTOR
- P – PROPOSED ELECTRICAL SERVICE ON PEDESTAL
- POLE BASE

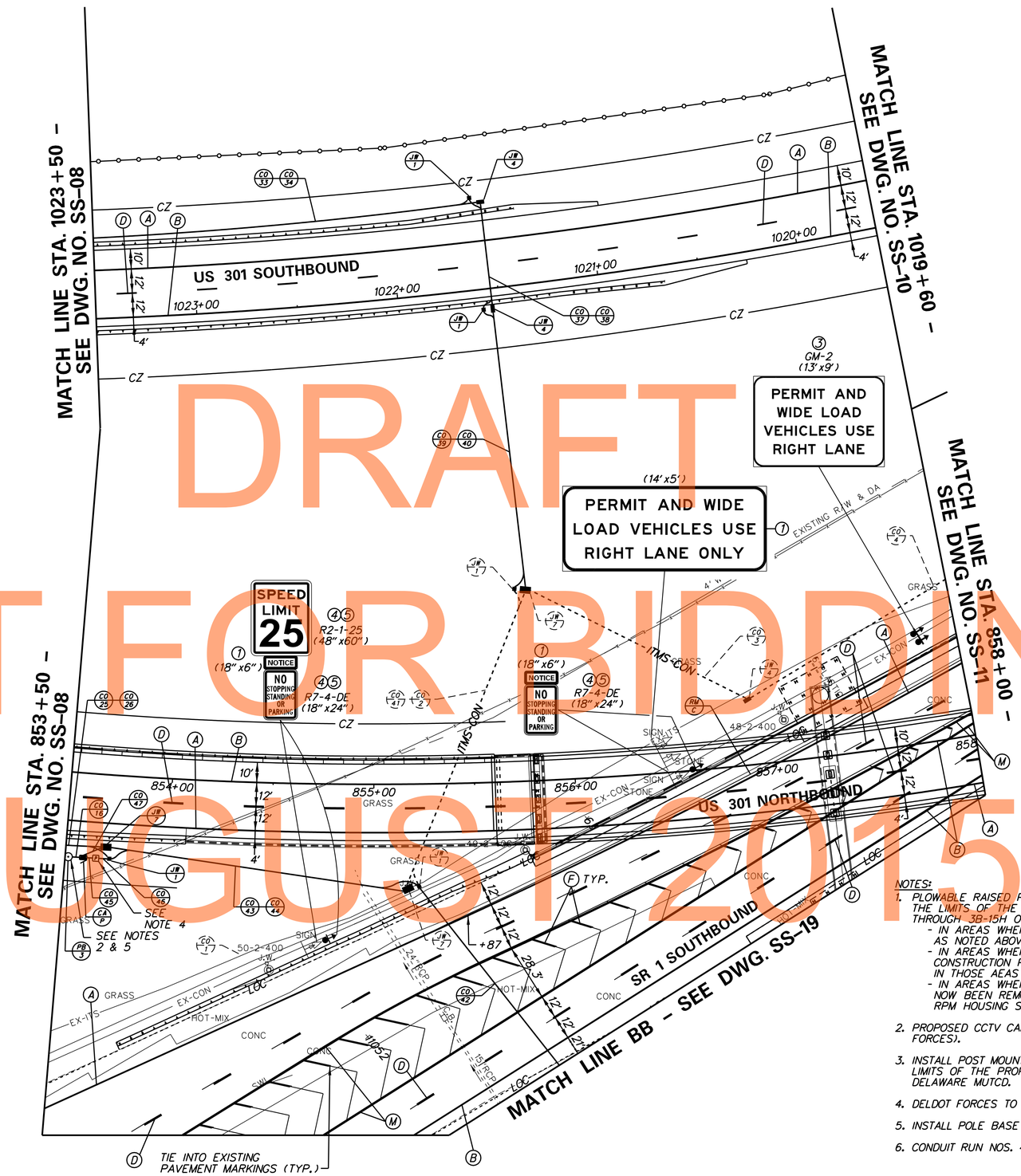

PAVEMENT MARKINGS LEGEND

SYMBOL	ITEM		QUANTITY
A	8" SOLID WHITE CONTRAST EPOXY RESIN PAINT, 3"BLACK, 5"WHITE	ITEM 748557	1,350 LF
		ITEM 748548	1,350 LF
B	5" SOLID YELLOW EPOXY RESIN PAINT (ITEM 748548)		1,180 LF
C	13" DOTTED WHITE RETROREFLECTIVE PREFORMED PATTERNED CONTRAST PAVEMENT MARKINGS, 3' LINE & 9' GAP, 1.5"BLACK, 10"WHITE, 1.5"BLACK (ITEM 748567)		0 LF
D	8" BROKEN WHITE RETROREFLECTIVE PREFORMED PATTERNED CONTRAST PAVEMENT MARKINGS, 10' LINE & 30' GAP, 1.5"BLACK, 5"WHITE, 1.5"BLACK (ITEM 748566)		430 LF
E	RETROREFLECTIVE PREFORMED PATTERNED MARKINGS, SYMBOL/LEGEND (ITEM 748529)		0 SF
F	12" SOLID WHITE EPOXY RESIN PAINT (ITEM 748509)		215 LF
G	12" SOLID WHITE RETROREFLECTIVE PREFORMED PATTERNED MARKINGS (ITEM NO. 748513)		0 LF
H	5" SOLID WHITE EPOXY RESIN PAINT (ITEM 748548)		0 LF
J	5" BROKEN WHITE EPOXY RESIN PAINT PERMANENT PAVEMENT STRIPING, 10' LINE, 30' GAP (ITEM 748548)		0 LF
K	5" BROKEN WHITE EPOXY RESIN PAINT PERMANENT PAVEMENT STRIPING, 3' LINE, 9' GAP (ITEM 748548)		0 LF
L	PERMANENT PAVEMENT STRIPING, SYMBOL/LEGEND, ALKYD THERMOPLASTIC (ITEM 748015)		0 SF
M	10" SOLID WHITE EPOXY RESIN PAINT (ITEM 748549)		830 LF
RM C	REMOVE EXISTING PAVEMENT STRIPING BY CONTRACTOR (ITEM 748530)		500 SF

NOTES:

1. PLOWABLE RAISED PAVEMENT MARKERS (RPMS) SHALL BE INSTALLED THROUGHOUT THE LIMITS OF THE PROPOSED PAVEMENT STRIPING AS PER FIGURES 3B-15A THROUGH 3B-15H OF THE DELAWARE MUTCD, AS APPLICABLE BELOW:
   - IN AREAS WHERE NEW LANES HAVE BEEN ADDED INSTALL RPMS AS NOTED ABOVE.
   - IN AREAS WHERE EXISTING LENSES WERE REMOVED DURING CONSTRUCTION PHASING, NEW LENSES ONLY SHALL BE INSTALLED IN THOSE AEAS WHERE PROPOSED STRIPING MATCHES EXISTING.
   - IN AREAS WHERE RPMS EXISTED PREVIOUSLY, BUT LANES HAVE NOW BEEN REMOVED IN THE ULTIMATE CONFIGURATION THE RPM HOUSING SHALL REMAIN WITH NO NEW LENS INSTALLED.
2. PROPOSED CCTV CAMERA ON 75' POLE (CAMERA, CABINET AND POLE BY DELDOT FORCES).
3. INSTALL POST MOUNTED AND/OR BARRIER MOUNTED DELINEATORS ALONG THE LIMITS OF THE PROPOSED CONSTRUCTION AS PER PART 3 OF THE DELAWARE MUTCD.
4. DELDOT FORCES TO PROVIDE DISCONNECT SWITCH PRIOR TO CCTV CAMERA CABINET.
5. INSTALL POLE BASE TYPE 3 WITH 10' POLE BASE EXTENSION.
6. CONDUIT RUN NOS. 45 & 46 SHALL BE RIGID GALVANIZED STEEL INSTALLED BY DELDOT FORCES.

DRAFT
NOT FOR BIDDING
AUGUST 2015

DELAWARE DEPARTMENT OF TRANSPORTATION

ADDENDUMS / REVISIONS

SCALE 0 30 60 90 FEET

US 301 & SR 1 INTERCHANGE

CONTRACT	BRIDGE NO.	BR1-433
T200911302	DESIGNED BY: J.H.R.	
COUNTY		
NEW CASTLE	CHECKED BY: J.M.M.	

SIGNING, STRIPING & CONDUIT PLAN

SS-09

SHEET NO. 458

TOTAL SHTS. 491

n:\3653-000\contract tb\cadd\SS009u301_1B.dgn 2/4/2015 2:00:51 PM

PAVEMENT MARKINGS LEGEND

SYMBOL	ITEM		QUANTITY
(A)	8" SOLID WHITE CONTRAST EPOXY RESIN PAINT, 3"BLACK, 5"WHITE	ITEM 748557	705 LF
		ITEM 748548	705 LF
(B)	5" SOLID YELLOW EPOXY RESIN PAINT (ITEM 748548)		705 LF
(C)	13" DOTTED WHITE RETROREFLECTIVE PREFORMED PATTERNED CONTRAST PAVEMENT MARKINGS, 3' LINE & 9' GAP, 1.5"BLACK, 10"WHITE, 1.5"BLACK (ITEM 748567)		0 LF
(D)	8" BROKEN WHITE RETROREFLECTIVE PREFORMED PATTERNED CONTRAST PAVEMENT MARKINGS, 10' LINE & 30' GAP, 1.5"BLACK, 5"WHITE, 1.5"BLACK (ITEM 748566)		130 LF
(E)	RETROREFLECTIVE PREFORMED PATTERNED MARKINGS, SYMBOL/LEGEND (ITEM 748529)		0 SF
(F)	12" SOLID WHITE EPOXY RESIN PAINT (ITEM 748509)		0 LF
(G)	12" SOLID WHITE RETROREFLECTIVE PREFORMED PATTERNED MARKINGS (ITEM NO. 748513)		0 LF
(H)	5" SOLID WHITE EPOXY RESIN PAINT (ITEM 748548)		0 LF
(J)	5" BROKEN WHITE EPOXY RESIN PAINT PERMANENT PAVEMENT STRIPING, 10' LINE, 30' GAP (ITEM 748548)		0 LF
(K)	5" BROKEN WHITE EPOXY RESIN PAINT PERMANENT PAVEMENT STRIPING, 3' LINE, 9' GAP (ITEM 748548)		0 LF
(L)	PERMANENT PAVEMENT STRIPING, SYMBOL/LEGEND, ALKYD THERMOPLASTIC (ITEM 748015)		0 SF
(M)	10" SOLID WHITE EPOXY RESIN PAINT (ITEM 748549)		0 LF
(REM C)	REMOVE EXISTING PAVEMENT STRIPING BY CONTRACTOR (ITEM 748530)		0 SF

NOTES:

1. PLOWABLE RAISED PAVEMENT MARKERS (RPMS) SHALL BE INSTALLED THROUGHOUT THE LIMITS OF THE PROPOSED PAVEMENT STRIPING AS PER FIGURES 3B-15A THROUGH 3B-15H OF THE DELAWARE MUTCD, AS APPLICABLE BELOW:
   - IN AREAS WHERE NEW LANES HAVE BEEN ADDED INSTALL RPMS AS NOTED ABOVE.
   - IN AREAS WHERE EXISTING LENSES WERE REMOVED DURING CONSTRUCTION PHASING, NEW LENSES ONLY SHALL BE INSTALLED IN THOSE AEAS WHERE PROPOSED STRIPING MATCHES EXISTING.
   - IN AREAS WHERE RPMS EXISTED PREVIOUSLY, BUT LANES HAVE NOW BEEN REMOVED IN THE ULTIMATE CONFIGURATION THE RPM HOUSING SHALL REMAIN WITH NO NEW LENS INSTALLED.
2. INSTALL POST MOUNTED AND/OR BARRIER MOUNTED DELINEATORS ALONG THE LIMITS OF THE PROPOSED CONSTRUCTION AS PER PART 3 OF THE DELAWARE MUTCD.

SIGNING LEGEND

(1)	REMOVE EXISTING SIGN
(2)	EXISTING SIGN TO REMAIN
(3)	PLACE NEW SIGN
(4)	RENEW EXISTING SIGN
(5)	REPOSITION EXISTING SIGN

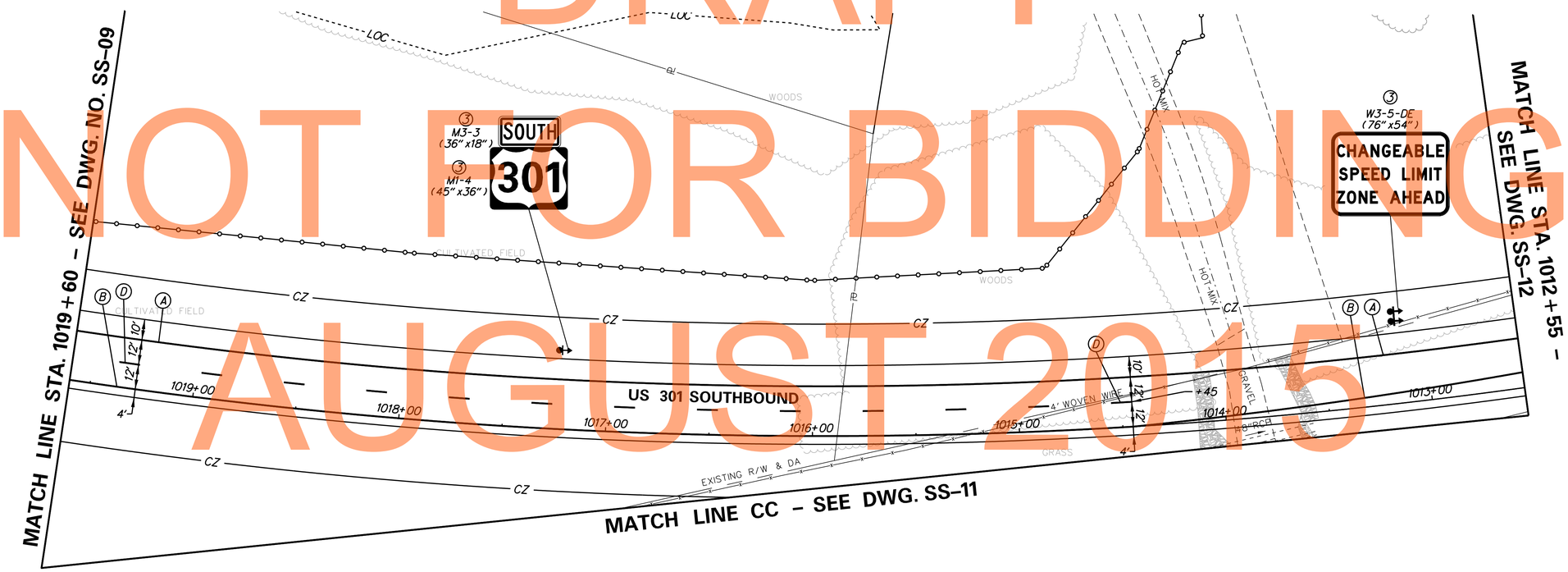

DRAFT
NOT FOR BIDDING
AUGUST 2015

DELAWARE DEPARTMENT OF TRANSPORTATION	ADDENDUMS / REVISIONS	SCALE 0 30 60 90 FEET	US 301 & SR 1 INTERCHANGE	CONTRACT T200911302 / COUNTY NEW CASTLE	BRIDGE NO. / DESIGNED BY: J.H.R. / CHECKED BY: J.M.M.	SIGNING, STRIPING & CONDUIT PLAN	SS-10 / SHEET NO. 459 / TOTAL SHTS. 491

n:\31653-000\contract tb\cadd\SS010U301_1B.dgn
2/4/2015 2:01:00 PM

ITMS LEGEND

- ITMS-CON — PROPOSED MULTIDUCT ITMS CONDUIT
- EX-ITS — EXISTING ITMS CONDUIT
- ITMS-CON — ITMS CONDUIT INSTALLED IN PHASE 1
- CA/X — ITMS CABINET AND IDENTIFIER
- ITMS CONDUIT JUNCTION WELL
- JW/X, JW/X — JUNCTION WELL IDENTIFIER (TYPE) (EXISTING AND PROPOSED)
- CO/X, CO/X — CONDUIT RUN IDENTIFIER (# OF RUN) (EXISTING AND PROPOSED)
- PB/X, PB/X — POLE BASE IDENTIFIER (TYPE) (EXISTING AND PROPOSED)
- JB/X — PROPOSED CONCRETE BARRIER JUNCTION BOX IDENTIFIER (TYPE)
- RM/C — TO BE REMOVED BY CONTRACTOR
- AB — TO BE ABANDONED BY CONTRACTOR
- P — PROPOSED ELECTRICAL SERVICE ON PEDESTAL
- POLE BASE

NOTES:

1. PLOWABLE RAISED PAVEMENT MARKERS (RPMS) SHALL BE INSTALLED THROUGHOUT THE LIMITS OF THE PROPOSED PAVEMENT STRIPING AS PER FIGURES 3B-15A THROUGH 3B-15H OF THE DELAWARE MUTCD, AS APPLICABLE BELOW:
   - IN AREAS WHERE NEW LANES HAVE BEEN ADDED INSTALL RPMS AS NOTED ABOVE.
   - IN AREAS WHERE EXISTING LENSES WERE REMOVED DURING CONSTRUCTION PHASING, NEW LENSES ONLY SHALL BE INSTALLED IN THOSE AEAS WHERE PROPOSED STRIPING MATCHES EXISTING.
   - IN AREAS WHERE RPMS EXISTED PREVIOUSLY, BUT LANES HAVE NOW BEEN REMOVED IN THE ULTIMATE CONFIGURATION THE RPM HOUSING SHALL REMAIN WITH NO NEW LENS INSTALLED.
2. REMOVE EXISTING SIGNS AND SIGN SUPPORTS ONLY, EXISTING OVERHEAD SIGN STRUCTURE TO REMAIN.
3. INSTALL PROPOSED SIGN OH-1a VERTICALLY CENTERED ABOUT TRUSS AND HORIZONTALLY CENTERED OVER TWO "EZPASS ONLY" LEFT LANES. INSTALL PROPOSED SIGN OH-1b VERTICALY CENTERED ABOUT TRUSS AND HORIZONTALLY CENTERED OVER TWO "CASH" RIGHT LANES. SIGNS SHALL MAINTAIN A MIN. 17'-9" VERTICAL CLEARANCE FROM BOTTOM OF SIGN TO HIGH POINT OF ROADWAY.
4. INSTALL POST MOUNTED AND/OR BARRIER MOUNTED DELINEATORS ALONG THE LIMITS OF THE PROPOSED CONSTRUCTION AS PER PART 3 OF THE DELAWARE MUTCD.

PAVEMENT MARKINGS LEGEND

SYMBOL	ITEM		QUANTITY
A	8" SOLID WHITE CONTRAST EPOXY RESIN PAINT, 3"BLACK, 5"WHITE	ITEM 748557	3,170 LF
		ITEM 748548	3,170 LF
B	5" SOLID YELLOW EPOXY RESIN PAINT (ITEM 748548)		3,910 LF
C	13" DOTTED WHITE RETROREFLECTIVE PREFORMED PATTERNED CONTRAST PAVEMENT MARKINGS, 3' LINE & 9' GAP, 1.5"BLACK, 10"WHITE, 1.5"BLACK (ITEM 748567)		6 LF
D	8" BROKEN WHITE RETROREFLECTIVE PREFORMED PATTERNED CONTRAST PAVEMENT MARKINGS, 10' LINE & 30' GAP, 1.5"BLACK, 5"WHITE, 1.5"BLACK (ITEM 748566)		780 LF
E	RETROREFLECTIVE PREFORMED PATTERNED MARKINGS, SYMBOL/LEGEND (ITEM 748529)		0 SF
F	12" SOLID WHITE EPOXY RESIN PAINT (ITEM 748509)		2 LF
G	12" SOLID WHITE RETROREFLECTIVE PREFORMED PATTERNED MARKINGS (ITEM NO. 748513)		0 LF
H	5" SOLID WHITE EPOXY RESIN PAINT (ITEM 748548)		800 LF
J	5" BROKEN WHITE EPOXY RESIN PAINT PERMANENT PAVEMENT STRIPING, 10' LINE, 30' GAP (ITEM 748548)		200 LF
K	5" BROKEN WHITE EPOXY RESIN PAINT PERMANENT PAVEMENT STRIPING, 3' LINE, 9' GAP (ITEM 748548)		0 LF
L	PERMANENT PAVEMENT STRIPING, SYMBOL/LEGEND, ALKYD THERMOPLASTIC (ITEM 748015)		0 SF
M	10" SOLID WHITE EPOXY RESIN PAINT (ITEM 748549)		2,110 LF
RM/C	REMOVE EXISTING PAVEMENT STRIPING BY CONTRACTOR (ITEM 748530)		380 SF

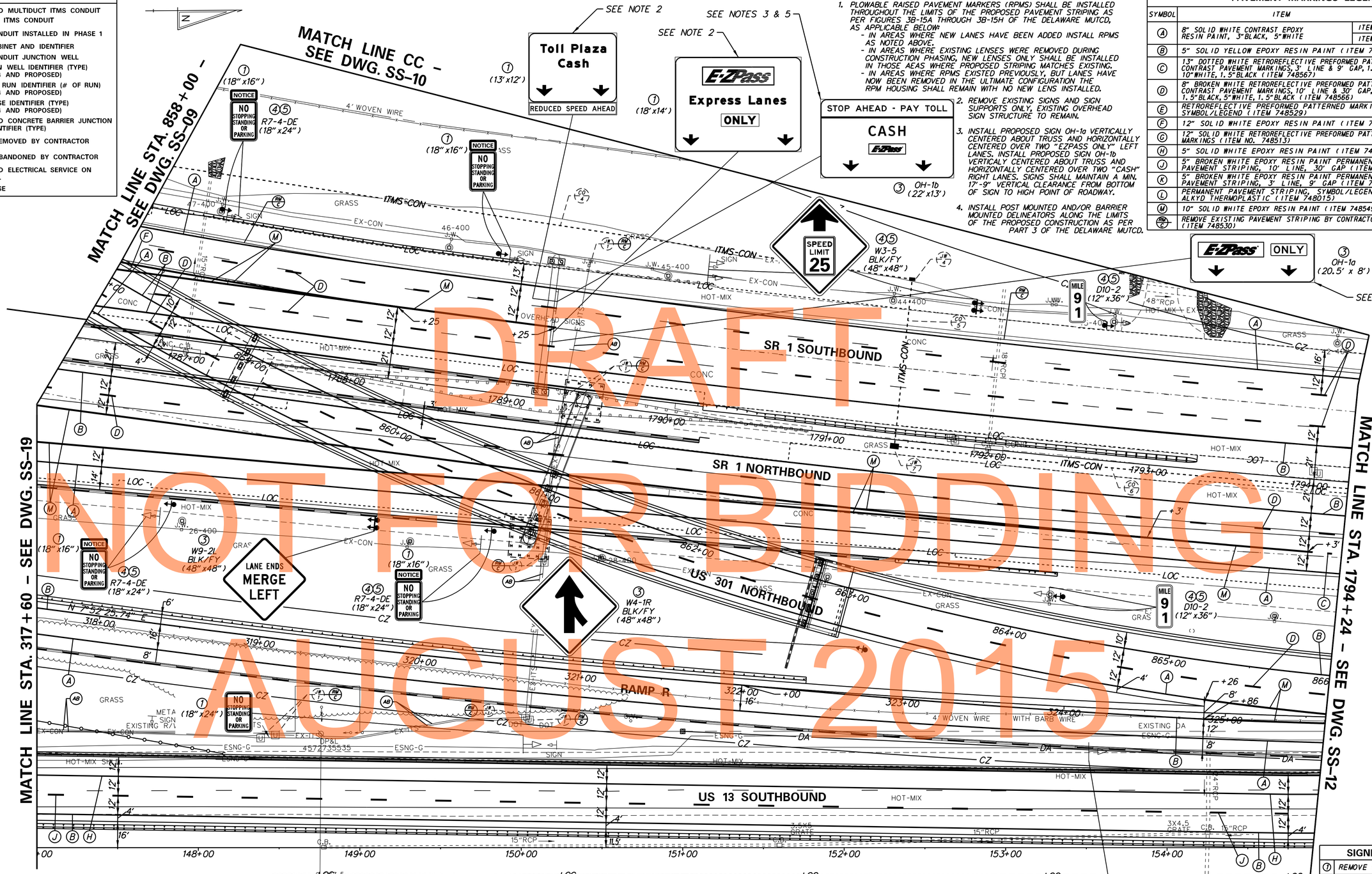

DRAFT
NOT FOR BIDDING
AUGUST 2015

ITMS CONDUIT RUN SCHEDULE

CO*	# OF CONDUITS	SIZE	LENGTH	B/T/O	AMOUNT AND TYPE OF CABLE/WIRE (SUPPLY AND INSTALLATION BY DELDOT FORCES)
4•	2	4 IN	574 FT••	-	1-144S, 1-24S, & 1-48S
5•	2	4 IN	102 FT	-	1-144S, 1-24S, & 1-48S
6•	2	4 IN	591 FT••	-	1-144S, 1-24S, & 1-48S

•DENOTES EXISTING CONDUIT
••QUANTITY CONTINUES ON ADJACENT SHEET
•••DENOTES CONDUIT INSTALLED BY DELDOT FORCES

B = BORE, T = TRENCH, O = OPEN CUT, BM = BRIDGE MOUNTED

OVERHEAD SIGN SUPPORT SCHEDULE (SEE DWG. NO. SS-29)

SIGN NUMBER	NUMBER OF SUPPORTS	SPACING (FEET)	SUPPORT LENGTH (FEET)(LEFT TO RIGHT)
OH-1a	4	2.75, 5, 5, 5, 2.75	8, 8, 8, 8
OH-1b	4	2, 6, 6, 6, 2	13, 13, 13, 13

NOTES (CONTINUED):

5. THE CONTRACTOR SHALL FURNISH AND INSTALL NEW BOLTS AND FLAT BARS FOR ATTACHING THE OVERHEAD SIGN SUPPORTS TO THE SQUARE HORIZONTAL TRUSS MEMBERS. THE NEW BOLTS AND FLAT BARS SHALL MATCH THE DIMENSIONS AND MATERIAL PROPERTIES OF THE EXISTING.

SIGNING LEGEND

1	REMOVE EXISTING SIGN
2	EXISTING SIGN TO REMAIN
3	PLACE NEW SIGN
4	RENEW EXISTING SIGN
5	REPOSITION EXISTING SIGN

DELAWARE DEPARTMENT OF TRANSPORTATION

ADDENDUMS / REVISIONS

SCALE 0 30 60 90 FEET

US 301 & SR 1 INTERCHANGE

CONTRACT	BRIDGE NO.	BR1-433, RW1-3 & RW1-3R
T200911302	DESIGNED BY: J.H.R.	
COUNTY		
NEW CASTLE	CHECKED BY: J.M.M.	

SIGNING, STRIPING & CONDUIT PLAN

SHEET NO.	TOTAL SHTS.
SS-11	
460	491

n:\3653-000\contract\ tb\cadd\SS01\U301_1B.dgn
2/4/2013 2:06:16 PM

ITMS CONDUIT RUN SCHEDULE

CO*	# OF CONDUITS	SIZE	LENGTH	B/T/O	AMOUNT AND TYPE OF CABLE/WIRE (SUPPLY AND INSTALLATION BY DELDOT FORCES)
6*	2	4 IN	591 FT**	-	1-144S, 1-24S, & 1-48S
7*	2	4 IN	594 FT**	-	1-144S, 1-24S, & 1-48S

*DENOTES EXISTING CONDUIT
**QUANTITY CONTINUES ON ADJACENT SHEET
***DENOTES CONDUIT INSTALLED BY DELDOT FORCES

B = BORE, T = TRENCH, O = OPEN CUT, BM = BRIDGE MOUNTED

NOTES:

1. PLOWABLE RAISED PAVEMENT MARKERS (RPMS) SHALL BE INSTALLED THROUGHOUT THE LIMITS OF THE PROPOSED PAVEMENT STRIPING AS PER FIGURES 3B-15A THROUGH 3B-15H OF THE DELAWARE MUTCD, AS APPLICABLE BELOW:
   - IN AREAS WHERE NEW LANES HAVE BEEN ADDED INSTALL RPMS AS NOTED ABOVE.
   - IN AREAS WHERE EXISTING LENSES WERE REMOVED DURING CONSTRUCTION PHASING, NEW LENSES ONLY SHALL BE INSTALLED IN THOSE AEAS WHERE PROPOSED STRIPING MATCHES EXISTING.
   - IN AREAS WHERE RPMS EXISTED PREVIOUSLY, BUT LANES HAVE NOW BEEN REMOVED IN THE ULTIMATE CONFIGURATION THE RPM HOUSING SHALL REMAIN WITH NO NEW LENS INSTALLED.
2. INSTALL POST MOUNTED AND/OR BARRIER MOUNTED DELINEATORS ALONG THE LIMITS OF THE PROPOSED CONSTRUCTION AS PER PART 3 OF THE DELAWARE MUTCD.
3. REMOVE EXISTING PAVEMENT LINE MARKINGS, 10'/30' SKIPS AND WHITE EDGELINE, FROM STATION 1796+60, RIGHT TO STATION 1808+80, RIGHT.
4. REMOVE EXISTING SIGN UPON OPENING OF RAMP R IN CONSTRUCTION PHASE 3.

ITMS LEGEND

- ITMS-CON — PROPOSED MULTIDUCT ITMS CONDUIT
- EX-ITS — EXISTING ITMS CONDUIT
- ITMS-CON — ITMS CONDUIT INSTALLED IN PHASE 1
- CA/X — ITMS CABINET AND IDENTIFIER
- ITMS CONDUIT JUNCTION WELL
- JB/X — JUNCTION WELL IDENTIFIER (TYPE) (EXISTING AND PROPOSED)
- CO/X — CONDUIT RUN IDENTIFIER (# OF RUN) (EXISTING AND PROPOSED)
- PB/X — POLE BASE IDENTIFIER (TYPE) (EXISTING AND PROPOSED)
- JB/X — PROPOSED CONCRETE BARRIER JUNCTION BOX IDENTIFIER (TYPE)
- RM/C — TO BE REMOVED BY CONTRACTOR
- AB — TO BE ABANDONED BY CONTRACTOR
- P — PROPOSED ELECTRICAL SERVICE ON PEDESTAL
- POLE BASE

PAVEMENT MARKINGS LEGEND

SYMBOL	ITEM		QUANTITY
A	8" SOLID WHITE CONTRAST EPOXY RESIN PAINT, 3"BLACK, 5"WHITE	ITEM 748557	2,445 LF
		ITEM 748548	2,445 LF
B	5" SOLID YELLOW EPOXY RESIN PAINT (ITEM 748548)		3,280 LF
C	13" DOTTED WHITE RETROREFLECTIVE PREFORMED PATTERNED CONTRAST PAVEMENT MARKINGS, 3' LINE & 9' GAP, 1.5"BLACK, 10"WHITE, 1.5"BLACK (ITEM 748567)		325 LF
D	8" BROKEN WHITE RETROREFLECTIVE PREFORMED PATTERNED CONTRAST PAVEMENT MARKINGS, 10' LINE & 30' GAP, 1.5"BLACK, 5"WHITE, 1.5"BLACK (ITEM 748566)		630 LF
E	RETROREFLECTIVE PREFORMED PATTERNED MARKINGS, SYMBOL/LEGEND (ITEM 748529)		42 SF
F	12" SOLID WHITE EPOXY RESIN PAINT (ITEM 748509)		0 LF
G	12" SOLID WHITE RETROREFLECTIVE PREFORMED PATTERNED MARKINGS (ITEM NO. 748513)		408 LF
H	5" SOLID WHITE EPOXY RESIN PAINT (ITEM 748548)		1,370 LF
J	5" BROKEN WHITE EPOXY RESIN PAINT PERMANENT PAVEMENT STRIPING, 10' LINE, 30' GAP (ITEM 748548)		340 LF
K	5" BROKEN WHITE EPOXY RESIN PAINT PERMANENT PAVEMENT STRIPING, 3' LINE, 9' GAP (ITEM 748548)		0 LF
L	PERMANENT PAVEMENT STRIPING, SYMBOL/LEGEND, ALKYD THERMOPLASTIC (ITEM 748015)		0 SF
M	10" SOLID WHITE EPOXY RESIN PAINT (ITEM 748549)		1735 LF
RM/C	REMOVE EXISTING PAVEMENT STRIPING BY CONTRACTOR (ITEM 748530)		1000 SF

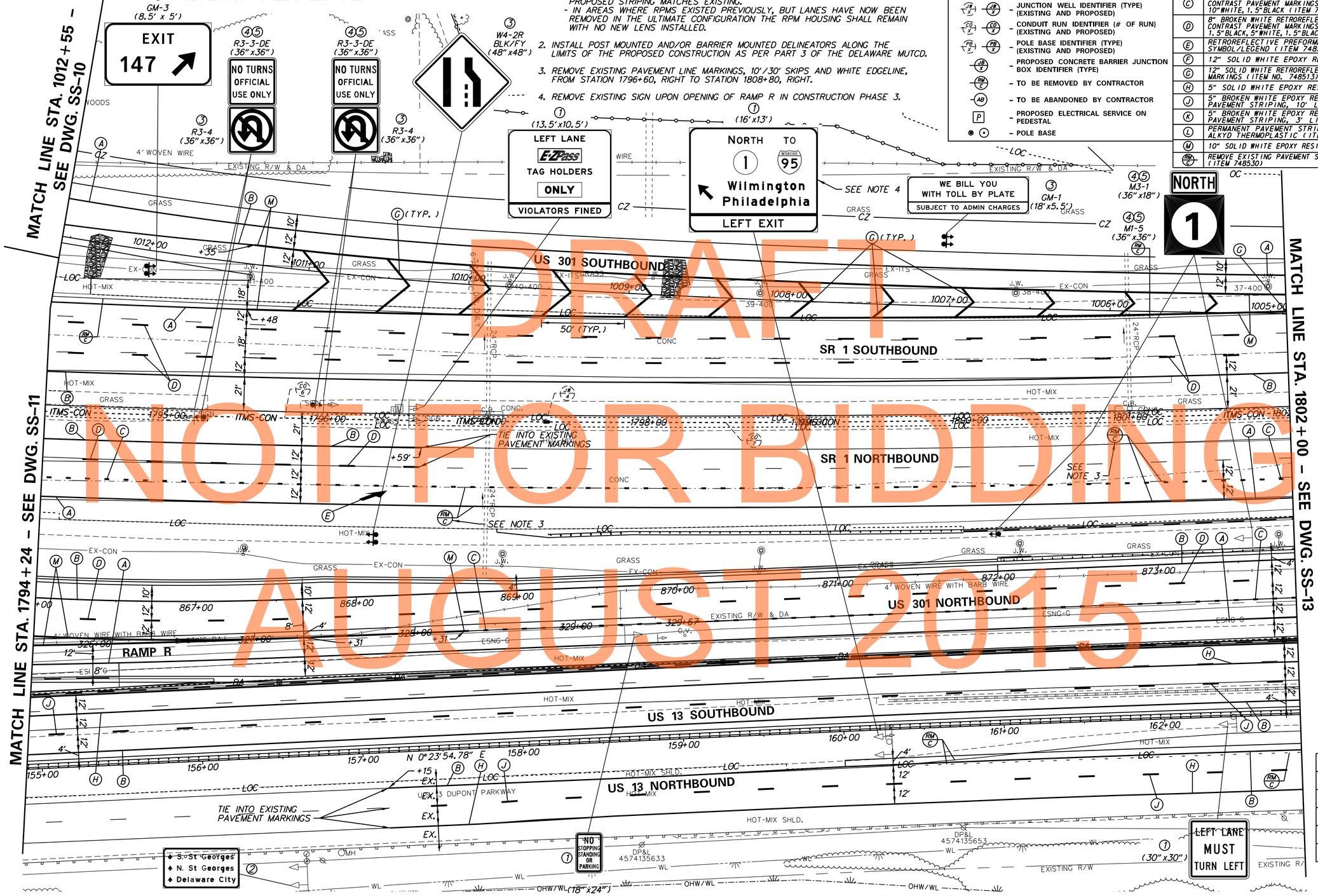

SIGNING LEGEND

1	REMOVE EXISTING SIGN
2	EXISTING SIGN TO REMAIN
3	PLACE NEW SIGN
4	RENEW EXISTING SIGN
5	REPOSITION EXISTING SIGN

SS-12

DELAWARE DEPARTMENT OF TRANSPORTATION

ADDENDUMS / REVISIONS

SCALE 0 30 60 90 FEET

US 301 & SR 1 INTERCHANGE

CONTRACT	BRIDGE NO.	RW1-3 & RW1-3R
T200911302	DESIGNED BY: J.H.R.	
COUNTY		
NEW CASTLE	CHECKED BY: J.M.M.	

SIGNING, STRIPING & CONDUIT PLAN

SHEET NO. 461
TOTAL SHTS. 491

n:\3653-000\contract tb\cadd\Traffic\AET\SS012\301_1B_AET.dgn 2/4/2013 2:14:10 PM

PAVEMENT MARKINGS LEGEND

SYMBOL	ITEM		QUANTITY
A	8" SOLID WHITE CONTRAST EPOXY RESIN PAINT, 3"BLACK, 5"WHITE	ITEM 748557	2,400 LF
		ITEM 748548	2,400 LF
B	5" SOLID YELLOW EPOXY RESIN PAINT (ITEM 748548)		3,200 LF
C	13" DOTTED WHITE RETROREFLECTIVE PREFORMED PATTERNED CONTRAST PAVEMENT MARKINGS, 3' LINE & 9' GAP, 1.5"BLACK, 10"WHITE, 1.5"BLACK (ITEM 748567)		112 LF
D	8" BROKEN WHITE RETROREFLECTIVE PREFORMED PATTERNED CONTRAST PAVEMENT MARKINGS, 10' LINE & 30' GAP, 1.5"BLACK, 5"WHITE, 1.5"BLACK (ITEM 748566)		630 LF
E	RETROREFLECTIVE PREFORMED PATTERNED MARKINGS, SYMBOL/LEGEND (ITEM 748529)		42 SF
F	12" SOLID WHITE EPOXY RESIN PAINT (ITEM 748509)		0 LF
G	12" SOLID WHITE RETROREFLECTIVE PREFORMED PATTERNED MARKINGS (ITEM NO. 748513)		52 LF
H	5" SOLID WHITE EPOXY RESIN PAINT (ITEM 748548)		1600 LF
J	5" BROKEN WHITE EPOXY RESIN PAINT PERMANENT PAVEMENT STRIPING, 10' LINE, 30' GAP (ITEM 748548)		400 LF
K	5" BROKEN WHITE EPOXY RESIN PAINT PERMANENT PAVEMENT STRIPING, 3' LINE, 9' GAP (ITEM 748548)		80 LF
L	PERMANENT PAVEMENT STRIPING, SYMBOL/LEGEND, ALKYD THERMOPLASTIC (ITEM 748015)		15.5 SF
M	10" SOLID WHITE EPOXY RESIN PAINT (ITEM 748549)		1066 LF
RM/C	REMOVE EXISTING PAVEMENT STRIPING BY CONTRACTOR (ITEM 748530)		1300 SF

ITMS LEGEND

- ITMS-CON – PROPOSED MULTIDUCT ITMS CONDUIT
- EX-ITS – EXISTING ITMS CONDUIT
- ITMS-CON – ITMS CONDUIT INSTALLED IN PHASE 1
- CA/X – ITMS CABINET AND IDENTIFIER
- ITMS CONDUIT JUNCTION WELL
- JB/X – JUNCTION WELL IDENTIFIER (TYPE) (EXISTING AND PROPOSED)
- CO/X – CONDUIT RUN IDENTIFIER (# OF RUN) (EXISTING AND PROPOSED)
- PB/X – POLE BASE IDENTIFIER (TYPE) (EXISTING AND PROPOSED)
- JB/X – PROPOSED CONCRETE BARRIER JUNCTION BOX IDENTIFIER (TYPE)
- RM/C – TO BE REMOVED BY CONTRACTOR
- AB – TO BE ABANDONED BY CONTRACTOR
- P – PROPOSED ELECTRICAL SERVICE ON PEDESTAL
- POLE BASE

NOTES:

1. PLOWABLE RAISED PAVEMENT MARKERS (RPMS) SHALL BE INSTALLED THROUGHOUT THE LIMITS OF THE PROPOSED PAVEMENT STRIPING AS PER FIGURES 3B-15A THROUGH 3B-15H OF THE DELAWARE MUTCD, AS APPLICABLE BELOW:
   - IN AREAS WHERE NEW LANES HAVE BEEN ADDED INSTALL RPMS AS NOTED ABOVE.
   - IN AREAS WHERE EXISTING LENSES WERE REMOVED DURING CONSTRUCTION PHASING, NEW LENSES ONLY SHALL BE INSTALLED IN THOSE AEAS WHERE PROPOSED STRIPING MATCHES EXISTING.
   - IN AREAS WHERE RPMS EXISTED PREVIOUSLY, BUT LANES HAVE NOW BEEN REMOVED IN THE ULTIMATE CONFIGURATION THE RPM HOUSING SHALL REMAIN WITH NO NEW LENS INSTALLED.
2. INSTALL POST MOUNTED AND/OR BARRIER MOUNTED DELINEATORS ALONG THE LIMITS OF THE PROPOSED CONSTRUCTION AS PER PART 3 OF THE DELAWARE MUTCD.
3. REMOVE EXISTING PAVEMENT LINE MARKINGS, 10'/30' SKIPS AND WHITE EDGELINE, FROM STATION 1796+60, RIGHT TO STATION 1808+80, RIGHT.
4. REMOVE EXISTING WHITE EDGE LINE PAVEMENT MARKINGS AND TUBULAR MARKERS ALONG NORTHBOUND US 13 LEFT TURN LANE.

ITMS CONDUIT RUN SCHEDULE

CO*	# OF CONDUITS	SIZE	LENGTH	B/T/O	AMOUNT AND TYPE OF CABLE/WIRE (SUPPLY AND INSTALLATION BY DELDOT FORCES)
7*	2	4 IN	594 FT**	-	1-144S, 1-24S, & 1-48S
8*	2	4 IN	591 FT*	-	1-144S, 1-24S, & 1-48S
9*	2	4 IN	176 FT**	-	1-144S, 1-24S, & 1-48S

*DENOTES EXISTING CONDUIT
**QUANTITY CONTINUES ON ADJACENT SHEET
***DENOTES CONDUIT INSTALLED BY DELDOT FORCES

B = BORE, T = TRENCH, O = OPEN CUT, BM = BRIDGE MOUNTED

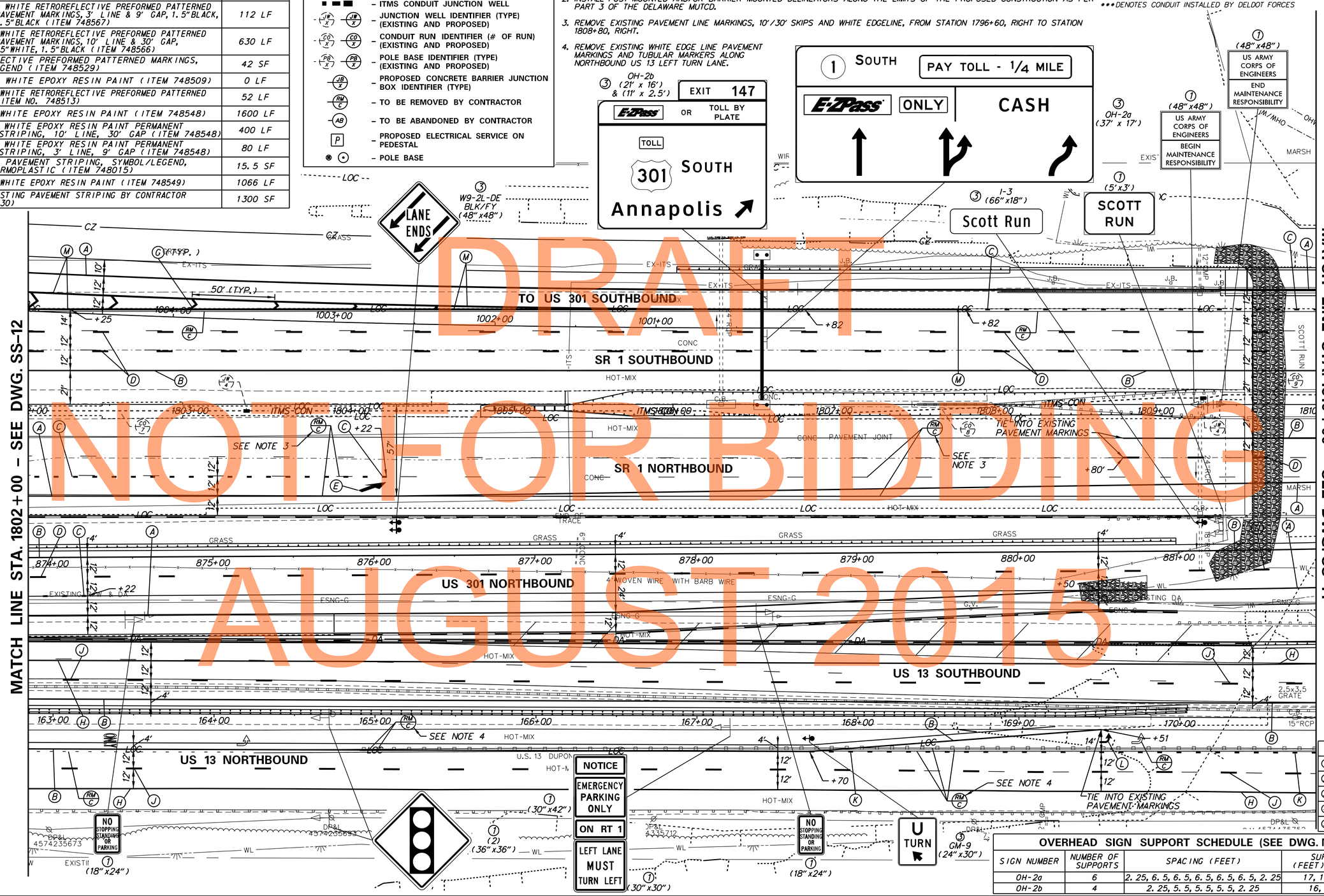

SIGNING LEGEND

1	REMOVE EXISTING SIGN
2	EXISTING SIGN TO REMAIN
3	PLACE NEW SIGN
4	RENEW EXISTING SIGN
5	REPOSITION EXISTING SIGN

OVERHEAD SIGN SUPPORT SCHEDULE (SEE DWG. NO. SS-29)

SIGN NUMBER	NUMBER OF SUPPORTS	SPACING (FEET)	SUPPORT LENGTH (FEET)(LEFT TO RIGHT)
OH-2a	6	2.25, 6.5, 6.5, 6.5, 6.5, 6.5, 6.5, 2.25	17, 17, 17, 17, 17, 17
OH-2b	4	2.25, 5.5, 5.5, 5.5, 2.25	16, 16, 18.5, 18.5

SS-13

DELAWARE DEPARTMENT OF TRANSPORTATION

ADDENDUMS / REVISIONS

SCALE 0 30 60 90 FEET

US 301 & SR 1 INTERCHANGE

CONTRACT	BRIDGE NO.	BR1-903N, BR1-903S, BR1-432, RW1-1 & RW1-3R
T200911302	DESIGNED BY: J.H.R.	
COUNTY		
NEW CASTLE	CHECKED BY: J.M.M.	

SIGNING, STRIPING & CONDUIT PLAN

SHEET NO.
462
TOTAL SHTS.
491

n:\3653-000\contract tb\cadd\Traffic\AET\SS013U301_18_AET.dgn 2/4/2015 2:14:18 PM

PAVEMENT MARKINGS LEGEND

SYMBOL	ITEM		QUANTITY
(A)	8" SOLID WHITE CONTRAST EPOXY RESIN PAINT, 3"BLACK, 5"WHITE	ITEM 748557	2,195 LF
		ITEM 748548	2,195 LF
(B)	5" SOLID YELLOW EPOXY RESIN PAINT (ITEM 748548)		2,995 LF
(C)	13" DOTTED WHITE RETROREFLECTIVE PREFORMED PATTERNED CONTRAST PAVEMENT MARKINGS, 3' LINE & 9' GAP, 1.5"BLACK, 10"WHITE, 1.5"BLACK (ITEM 748567)		363 LF
(D)	8" BROKEN WHITE RETROREFLECTIVE PREFORMED PATTERNED CONTRAST PAVEMENT MARKINGS, 10' LINE & 30' GAP, 1.5"BLACK, 5"WHITE, 1.5"BLACK (ITEM 748566)		640 LF
(E)	RETROREFLECTIVE PREFORMED PATTERNED MARKINGS, SYMBOL/LEGEND (ITEM 748529)		42 SF
(F)	12" SOLID WHITE EPOXY RESIN PAINT (ITEM 748509)		0 LF
(G)	12" SOLID WHITE RETROREFLECTIVE PREFORMED PATTERNED MARKINGS (ITEM NO. 748513)		0 LF
(H)	5" SOLID WHITE EPOXY RESIN PAINT (ITEM 748548)		1275 LF
(J)	5" BROKEN WHITE EPOXY RESIN PAINT PERMANENT PAVEMENT STRIPING, 10' LINE, 30' GAP (ITEM 748548)		210 LF
(K)	5" BROKEN WHITE EPOXY RESIN PAINT PERMANENT PAVEMENT STRIPING, 3' LINE, 9' GAP (ITEM 748548)		45 LF
(L)	PERMANENT PAVEMENT STRIPING, SYMBOL/LEGEND, ALKYD THERMOPLASTIC (ITEM 748015)		31 SF
(M)	10" SOLID WHITE EPOXY RESIN PAINT (ITEM 748549)		410 LF
(RM C)	REMOVE EXISTING PAVEMENT STRIPING BY CONTRACTOR (ITEM 748530)		1100 SF

ITMS LEGEND

- ITMS-CON – PROPOSED MULTIDUCT ITMS CONDUIT
- EX-ITS – EXISTING ITMS CONDUIT
- ITMS-CON – ITMS CONDUIT INSTALLED IN PHASE 1
- (CA X) – ITMS CABINET AND IDENTIFIER
- ITMS CONDUIT JUNCTION WELL
- (JW X) (JW X) – JUNCTION WELL IDENTIFIER (TYPE) (EXISTING AND PROPOSED)
- (CO X) (CO X) – CONDUIT RUN IDENTIFIER (# OF RUN) (EXISTING AND PROPOSED)
- (PB X) (PB X) – POLE BASE IDENTIFIER (TYPE) (EXISTING AND PROPOSED)
- (JB X) – PROPOSED CONCRETE BARRIER JUNCTION BOX IDENTIFIER (TYPE)
- (RM C) – TO BE REMOVED BY CONTRACTOR
- (AB) – TO BE ABANDONED BY CONTRACTOR
- (P) – PROPOSED ELECTRICAL SERVICE ON PEDESTAL
- POLE BASE

ITMS CONDUIT RUN SCHEDULE

CO*	# OF CONDUITS	SIZE	LENGTH	B/T/O	AMOUNT AND TYPE OF CABLE/WIRE (SUPPLY AND INSTALLATION BY DELDOT FORCES)
9*	2	4 IN	176 FT**	-	1-144S, 1-24S, & 1-48S
10*	2	4 IN	530 FT	-	1-144S, 1-24S, & 1-48S
11*	2	4 IN	527 FT**	-	1-144S, 1-24S, & 1-48S

*DENOTES EXISTING CONDUIT
**QUANTITY CONTINUES ON ADJACENT SHEET
***DENOTES CONDUIT INSTALLED BY DELDOT FORCES

B = BORE, T = TRENCH, O = OPEN CUT, BM = BRIDGE MOUNTED

SIGNING LEGEND

(1)	REMOVE EXISTING SIGN
(2)	EXISTING SIGN TO REMAIN
(3)	PLACE NEW SIGN
(4)	RENEW EXISTING SIGN
(5)	REPOSITION EXISTING SIGN

NOTES:

1. PLOWABLE RAISED PAVEMENT MARKERS (RPMS) SHALL BE INSTALLED THROUGHOUT THE LIMITS OF THE PROPOSED PAVEMENT STRIPING AS PER FIGURES 3B-15A THROUGH 3B-15H OF THE DELAWARE MUTCD, AS APPLICABLE BELOW:
   - IN AREAS WHERE NEW LANES HAVE BEEN ADDED INSTALL RPMS AS NOTED ABOVE.
   - IN AREAS WHERE EXISTING LENSES WERE REMOVED DURING CONSTRUCTION PHASING, NEW LENSES ONLY SHALL BE INSTALLED IN THOSE AEAS WHERE PROPOSED STRIPING MATCHES EXISTING.
   - IN AREAS WHERE RPMS EXISTED PREVIOUSLY, BUT LANES HAVE NOW BEEN REMOVED IN THE ULTIMATE CONFIGURATION THE RPM HOUSING SHALL REMAIN WITH NO NEW LENS INSTALLED.
2. REMOVE EXISTING WHITE EDGE LINE PAVEMENT MARKINGS AND TUBULAR MARKERS ALONG NORTHBOUND US 13 LEFT TURN LANE.
3. INSTALL POST MOUNTED AND/OR BARRIER MOUNTED DELINEATORS ALONG THE LIMITS OF THE PROPOSED CONSTRUCTION AS PER PART 3 OF THE DELAWARE MUTCD.

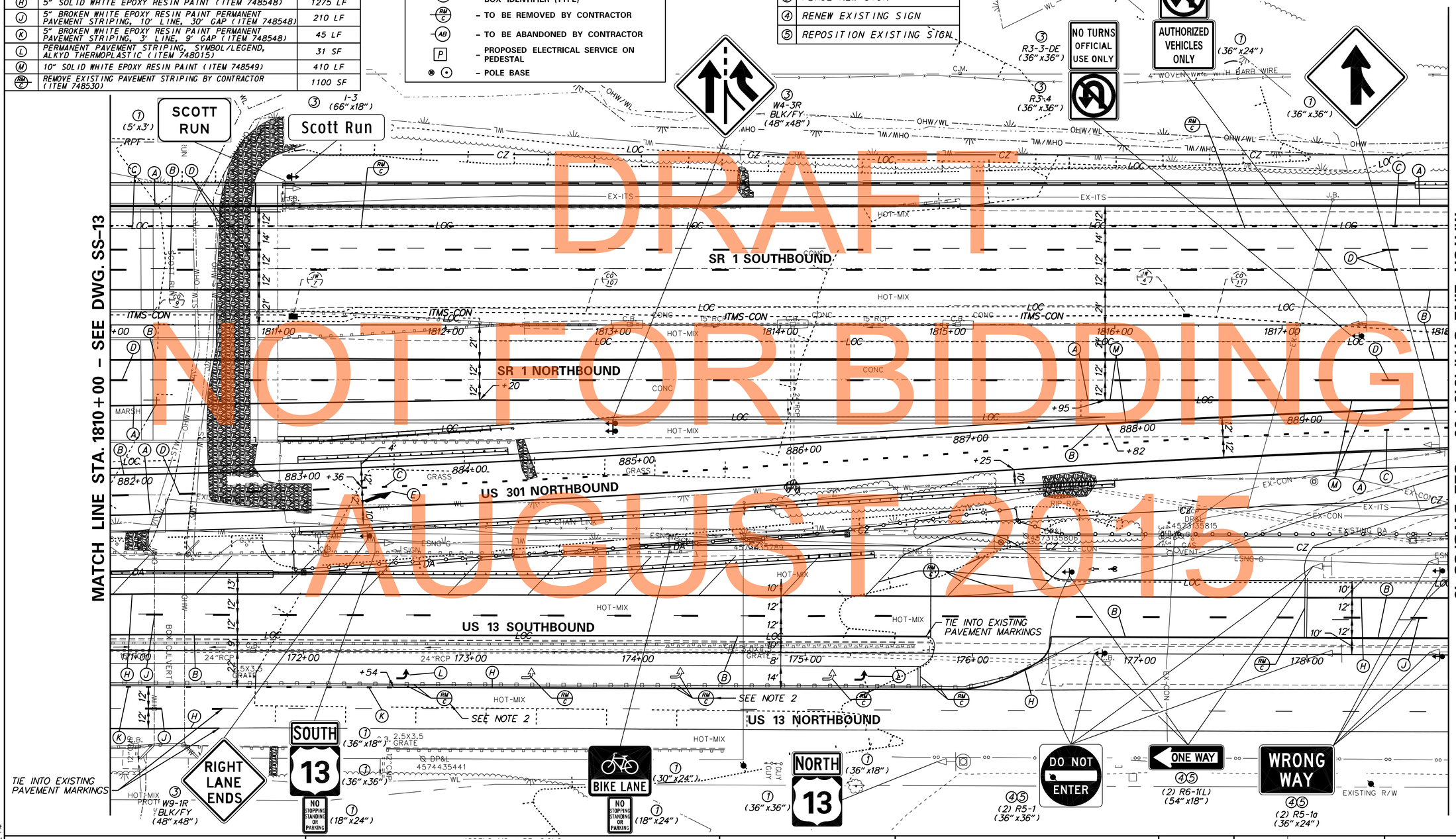

DRAFT
NOT FOR BIDDING
AUGUST 2015

DELAWARE DEPARTMENT OF TRANSPORTATION

ADDENDUMS / REVISIONS

SCALE 0 30 60 90 FEET

US 301 & SR 1 INTERCHANGE

CONTRACT	BRIDGE NO.	BR1-903N, BR1-903S, BR1-432 & RW1-1
T200911302	DESIGNED BY: J.H.R.	
COUNTY		
NEW CASTLE	CHECKED BY: J.M.M.	

SIGNING, STRIPING & CONDUIT PLAN

SS-14
SHEET NO.
463
TOTAL SHTS.
491

n:\3163-000\contract_tb\cadd\SS014U301_18.dgn
2/4/2013 2:00:52 PM

NOTES:

1. PLOWABLE RAISED PAVEMENT MARKERS (RPMS) SHALL BE INSTALLED THROUGHOUT THE LIMITS OF THE PROPOSED PAVEMENT STRIPING AS PER FIGURES 3B-15A THROUGH 3B-15H OF THE DELAWARE MUTCD, AS APPLICABLE BELOW:
   - IN AREAS WHERE NEW LANES HAVE BEEN ADDED INSTALL RPMS AS NOTED ABOVE.
   - IN AREAS WHERE EXISTING LENSES WERE REMOVED DURING CONSTRUCTION PHASING, NEW LENSES ONLY SHALL BE INSTALLED IN THOSE AEAS WHERE PROPOSED STRIPING MATCHES EXISTING.
   - IN AREAS WHERE RPMS EXISTED PREVIOUSLY, BUT LANES HAVE NOW BEEN REMOVED IN THE ULTIMATE CONFIGURATION THE RPM HOUSING SHALL REMAIN WITH NO NEW LENS INSTALLED.
2. INSTALL POST MOUNTED AND/OR BARRIER MOUNTED DELINEATORS ALONG THE LIMITS OF THE PROPOSED CONSTRUCTION AS PER PART 3 OF THE DELAWARE MUTCD.

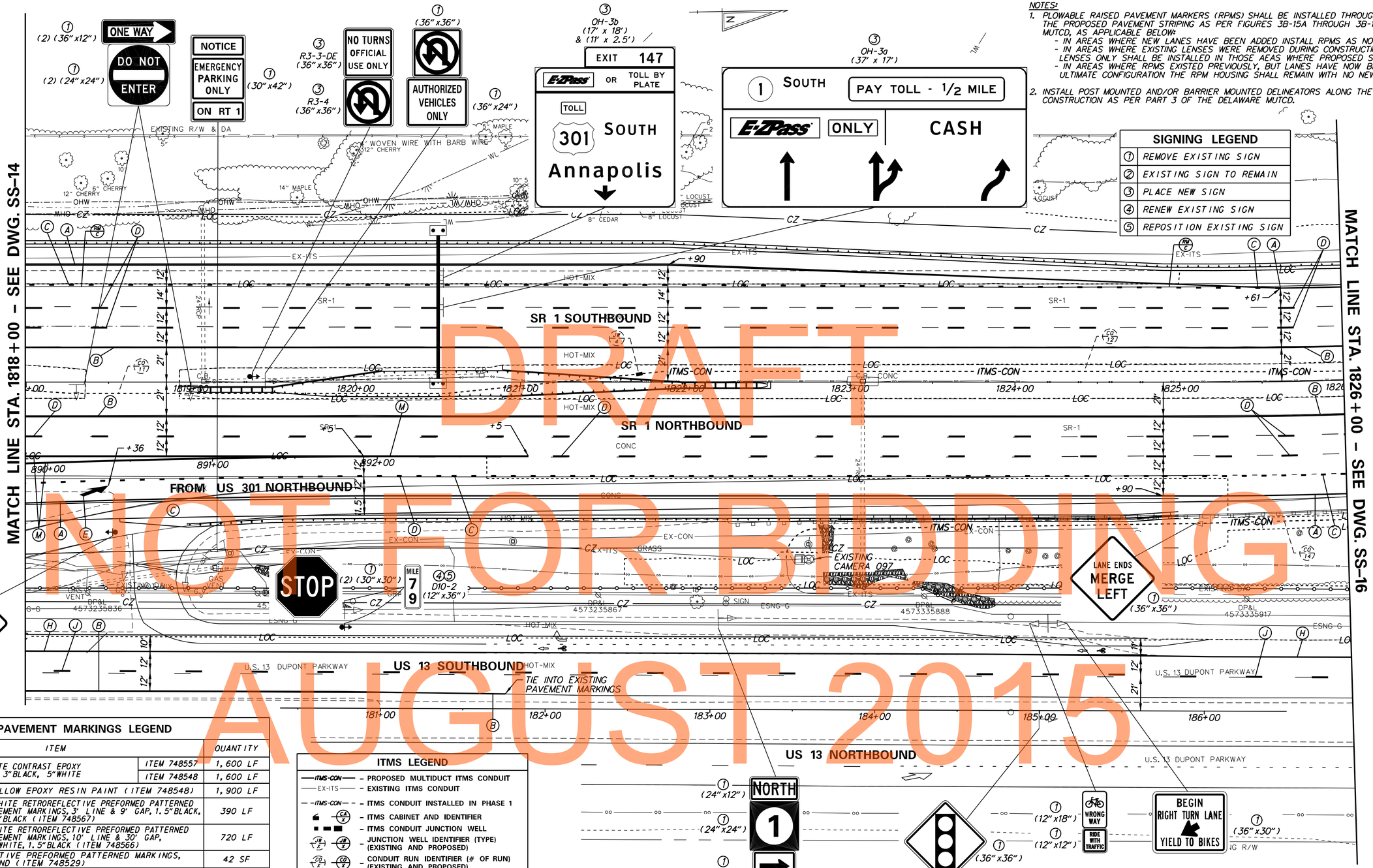

SIGNING LEGEND

1	REMOVE EXISTING SIGN
2	EXISTING SIGN TO REMAIN
3	PLACE NEW SIGN
4	RENEW EXISTING SIGN
5	REPOSITION EXISTING SIGN

PAVEMENT MARKINGS LEGEND

SYMBOL	ITEM		QUANTITY
A	8" SOLID WHITE CONTRAST EPOXY RESIN PAINT, 3"BLACK, 5"WHITE	ITEM 748557	1,600 LF
		ITEM 748548	1,600 LF
B	5" SOLID YELLOW EPOXY RESIN PAINT (ITEM 748548)		1,900 LF
C	13" DOTTED WHITE RETROREFLECTIVE PREFORMED PATTERNED CONTRAST PAVEMENT MARKINGS, 3' LINE & 9' GAP, 1.5"BLACK, 10"WHITE, 1.5"BLACK (ITEM 748567)		390 LF
D	8" BROKEN WHITE RETROREFLECTIVE PREFORMED PATTERNED CONTRAST PAVEMENT MARKINGS, 10' LINE & 30' GAP, 1.5"BLACK, 5"WHITE, 1.5"BLACK (ITEM 748566)		720 LF
E	RETROREFLECTIVE PREFORMED PATTERNED MARKINGS, SYMBOL/LEGEND (ITEM 748529)		42 SF
F	12" SOLID WHITE EPOXY RESIN PAINT (ITEM 748509)		0 LF
G	12" SOLID WHITE RETROREFLECTIVE PREFORMED PATTERNED MARKINGS (ITEM NO. 748513)		0 LF
H	5" SOLID WHITE EPOXY RESIN PAINT (ITEM 748548)		800 LF
J	5" BROKEN WHITE EPOXY RESIN PAINT PERMANENT PAVEMENT STRIPING, 10' LINE, 30' GAP (ITEM 748548)		200 LF
K	5" BROKEN WHITE EPOXY RESIN PAINT PERMANENT PAVEMENT STRIPING, 3' LINE, 9' GAP (ITEM 748548)		0 LF
L	PERMANENT PAVEMENT STRIPING, SYMBOL/LEGEND, ALKYD THERMOPLASTIC (ITEM 748015)		0 SF
M	10" SOLID WHITE EPOXY RESIN PAINT (ITEM 748549)		510 LF
RM/C	REMOVE EXISTING PAVEMENT STRIPING BY CONTRACTOR (ITEM 748530)		800 SF

ITMS LEGEND

- ITMS-CON — PROPOSED MULTIDUCT ITMS CONDUIT
- EX-ITS — EXISTING ITMS CONDUIT
- ITMS-CON — ITMS CONDUIT INSTALLED IN PHASE 1
- CA/X — ITMS CABINET AND IDENTIFIER
- ITMS CONDUIT JUNCTION WELL
- JB/X — JUNCTION WELL IDENTIFIER (TYPE) (EXISTING AND PROPOSED)
- CO/X — CONDUIT RUN IDENTIFIER (# OF RUN) (EXISTING AND PROPOSED)
- PB/X — POLE BASE IDENTIFIER (TYPE) (EXISTING AND PROPOSED)
- JB/X — PROPOSED CONCRETE BARRIER JUNCTION BOX IDENTIFIER (TYPE)
- RM/C — TO BE REMOVED BY CONTRACTOR
- AB — TO BE ABANDONED BY CONTRACTOR
- P — PROPOSED ELECTRICAL SERVICE ON PEDESTAL
- POLE BASE

OVERHEAD SIGN SUPPORT SCHEDULE (SEE DWG. NO. SS-29)

SIGN NUMBER	NUMBER OF SUPPORTS	SPACING (FEET)	SUPPORT LENGTH (FEET)(LEFT TO RIGHT)
OH-3a	6	2.25, 6.5, 6.5, 6.5, 6.5, 6.5, 6.5, 2.25	17, 17, 17, 17, 17, 17
OH-3b	3	2.5, 6, 6, 2.5	18, 20.5, 20.5

ITMS CONDUIT RUN SCHEDULE

CO#	# OF CONDUITS	SIZE	LENGTH	B/T/O	AMOUNT AND TYPE OF CABLE/WIRE (SUPPLY AND INSTALLATION BY DELDOT FORCES)
11*	2	4 IN	527 FT**	-	1-144S, 1-24S, & 1-48S
12*	2	4 IN	485 FT**	-	1-144S, 1-24S, & 1-48S
14*	1	4 IN	411 FT**	-	1-12S

*DENOTES EXISTING CONDUIT
**QUANTITY CONTINUES ON ADJACENT SHEET
***DENOTES CONDUIT INSTALLED BY DELDOT FORCES

B = BORE, T = TRENCH, O = OPEN CUT, BM = BRIDGE MOUNTED

DRAFT
NOT FOR BIDDING
AUGUST 2015

DELAWARE DEPARTMENT OF TRANSPORTATION

ADDENDUMS / REVISIONS

SCALE 0 30 60 90 FEET

US 301 & SR 1 INTERCHANGE

CONTRACT	BRIDGE NO.	SIGNING, STRIPING & CONDUIT PLAN	SS-15
T200911302	DESIGNED BY: J.H.R.		SHEET NO. 464
COUNTY NEW CASTLE	CHECKED BY: J.M.M.		TOTAL SHTS. 491

n:\3653-000\contract tb\cadd\Traffic\AET\SS015U301_1B_AET.dgn
2/4/2015 2:14:29 PM

NOTES:

1. REMOVE EXISTING SIGNS AND SIGN SUPPORTS ONLY, EXISTING OVERHEAD SIGN STRUCTURE TO REMAIN.
2. INSTALL PROPOSED SIGN OH-4 VERTICALLY CENTERED ABOUT EXISTING TRUSS AND HORIZONTALLY CENTERED OVER THREE SOUTHBOUND SR 1 LANES. SIGNS SHALL MAINTAIN A MINIMUM 17'-9" VERTICAL CLEARANCE FROM BOTTOM OF SIGN TO HIGH POINT OF ROADWAY.
3. PLOWABLE RAISED PAVEMENT MARKERS (RPMS) SHALL BE INSTALLED THROUGHOUT THE LIMITS OF THE PROPOSED PAVEMENT STRIPING AS PER FIGURES 3B-15A THROUGH 3B-15H OF THE DELAWARE MUTCD, AS APPLICABLE BELOW:
   - IN AREAS WHERE NEW LANES HAVE BEEN ADDED INSTALL RPMS AS NOTED ABOVE.
   - IN AREAS WHERE EXISTING LENSES WERE REMOVED DURING CONSTRUCTION PHASING, NEW LENSES ONLY SHALL BE INSTALLED IN THOSE AEAS WHERE PROPOSED STRIPING MATCHES EXISTING.
   - IN AREAS WHERE RPMS EXISTED PREVIOUSLY, BUT LANES HAVE NOW BEEN REMOVED IN THE ULTIMATE CONFIGURATION THE RPM HOUSING SHALL REMAIN WITH NO NEW LENS INSTALLED.
4. INSTALL POST MOUNTED AND/OR BARRIER MOUNTED DELINEATORS ALONG THE LIMITS OF THE PROPOSED CONSTRUCTION AS PER PART 3 OF THE DELAWARE MUTCD.
5. THE CONTRACTOR SHALL FURNISH AND INSTALL NEW BOLTS AND FLAT BARS FOR ATTACHING THE OVERHEAD SIGN SUPPORTS TO THE SQUARE HORIZONTAL TRUSS MEMBERS. THE NEW BOLTS AND FLAT BARS SHALL MATCH THE DIMENSIONS AND MATERIAL PROPERTIES OF THE EXISTING.

ITMS CONDUIT RUN SCHEDULE

CO*	# OF CONDUITS	SIZE	LENGTH	B/T/O	AMOUNT AND TYPE OF CABLE/WIRE (SUPPLY AND INSTALLATION BY DELDOT FORCES)
12*	2	4 IN	485 FT**	-	1-144S, 1-24S, & 1-48S
13*	2	4 IN	72 FT	-	1-144S, 1-24S, & 1-48S
14*	1	4 IN	411 FT**	-	1-12S
15*	1	4 IN	89 FT	-	1-12S
20*	1	4 IN	91.3 FT**	-	1-144S, 1-24S, & 1-48S
58*	6	4 IN	9 FT	-	COMMUNICATION CABLES

*DENOTES EXISTING CONDUIT
**QUANTITY CONTINUES ON ADJACENT SHEET
***DENOTES CONDUIT INSTALLED BY DELDOT FORCES

B = BORE, T = TRENCH, O = OPEN CUT, BM = BRIDGE MOUNTED

PAVEMENT MARKINGS LEGEND

SYMBOL	ITEM		QUANTITY
A	8" SOLID WHITE CONTRAST EPOXY RESIN PAINT, 3"BLACK, 5"WHITE	ITEM 748557	1,590 LF
		ITEM 748548	1,590 LF
B	5" SOLID YELLOW EPOXY RESIN PAINT (ITEM 748548)		1,305 LF
C	13" DOTTED WHITE RETROREFLECTIVE PREFORMED PATTERNED CONTRAST PAVEMENT MARKINGS, 3' LINE & 9' GAP, 1.5"BLACK, 10"WHITE, 1.5"BLACK (ITEM 748567)		205 LF
D	8" BROKEN WHITE RETROREFLECTIVE PREFORMED PATTERNED CONTRAST PAVEMENT MARKINGS, 10' LINE & 30' GAP, 1.5"BLACK, 5"WHITE, 1.5"BLACK (ITEM 748566)		660 LF
E	RETROREFLECTIVE PREFORMED PATTERNED MARKINGS, SYMBOL/LEGEND (ITEM 748529)		42 SF
F	12" SOLID WHITE EPOXY RESIN PAINT (ITEM 748509)		0 LF
G	12" SOLID WHITE RETROREFLECTIVE PREFORMED PATTERNED MARKINGS (ITEM NO. 748513)		0 LF
H	5" SOLID WHITE EPOXY RESIN PAINT (ITEM 748548)		312 LF
J	5" BROKEN WHITE EPOXY RESIN PAINT PERMANENT PAVEMENT STRIPING, 10' LINE, 30' GAP (ITEM 748548)		80 LF
K	5" BROKEN WHITE EPOXY RESIN PAINT PERMANENT PAVEMENT STRIPING, 3' LINE, 9' GAP (ITEM 748548)		0 LF
L	PERMANENT PAVEMENT STRIPING, SYMBOL/LEGEND, ALKYD THERMOPLASTIC (ITEM 748015)		0 SF
M	10" SOLID WHITE EPOXY RESIN PAINT (ITEM 748549)		0 LF
RM C	REMOVE EXISTING PAVEMENT STRIPING BY CONTRACTOR (ITEM 748530)		0 SF

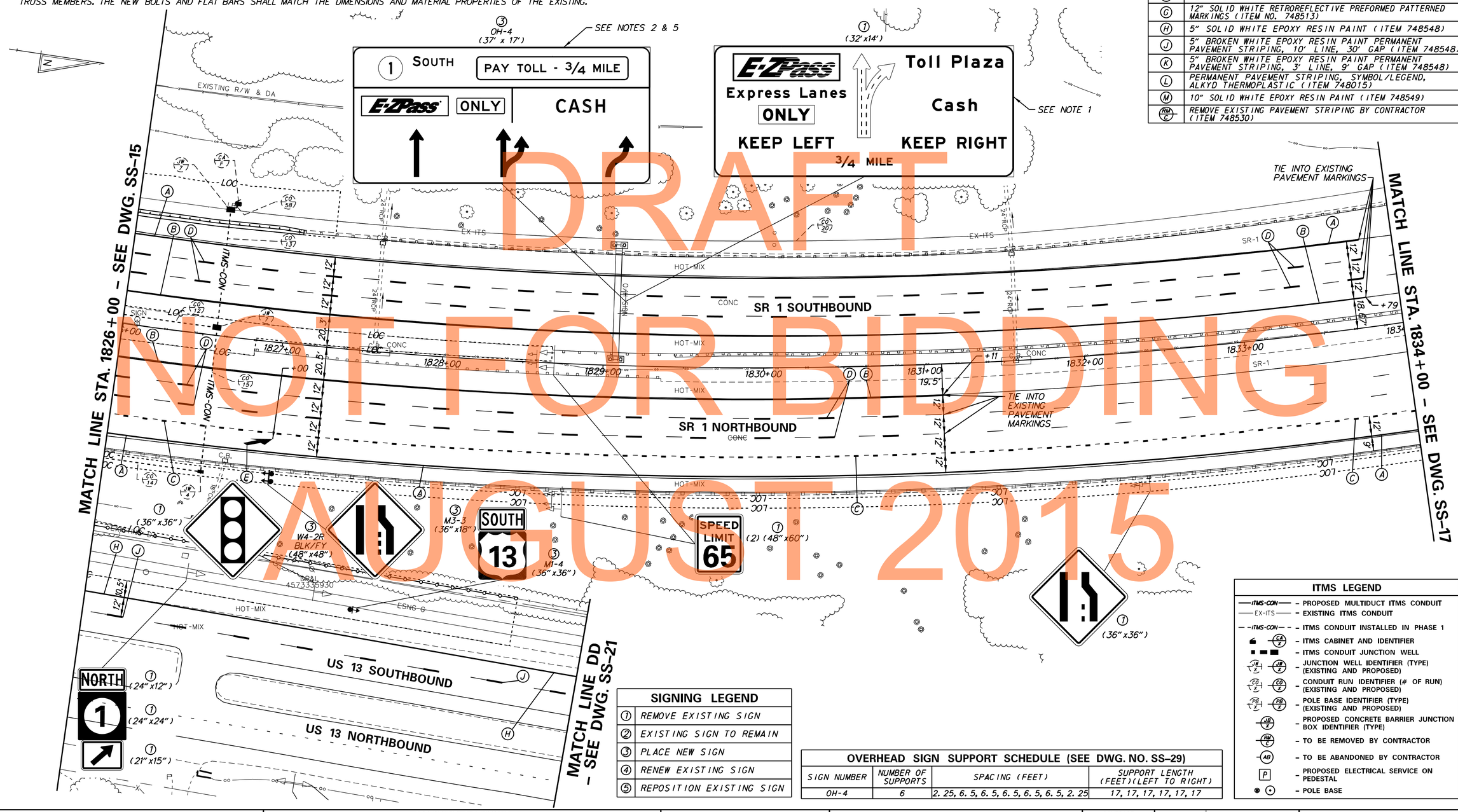

DRAFT
NOT FOR BIDDING
AUGUST 2015

SIGNING LEGEND

1	REMOVE EXISTING SIGN
2	EXISTING SIGN TO REMAIN
3	PLACE NEW SIGN
4	RENEW EXISTING SIGN
5	REPOSITION EXISTING SIGN

OVERHEAD SIGN SUPPORT SCHEDULE (SEE DWG. NO. SS-29)

SIGN NUMBER	NUMBER OF SUPPORTS	SPACING (FEET)	SUPPORT LENGTH (FEET)(LEFT TO RIGHT)
OH-4	6	2. 25, 6. 5, 6. 5, 6. 5, 6. 5, 6. 5, 2. 25	17, 17, 17, 17, 17, 17

ITMS LEGEND

- ITMS-CON — PROPOSED MULTIDUCT ITMS CONDUIT
- EX-ITS — EXISTING ITMS CONDUIT
- ITMS-CON — ITMS CONDUIT INSTALLED IN PHASE 1
- CA X — ITMS CABINET AND IDENTIFIER
- ITMS CONDUIT JUNCTION WELL
- JB X — JUNCTION WELL IDENTIFIER (TYPE) (EXISTING AND PROPOSED)
- CO X — CONDUIT RUN IDENTIFIER (# OF RUN) (EXISTING AND PROPOSED)
- PB X — POLE BASE IDENTIFIER (TYPE) (EXISTING AND PROPOSED)
- JB X — PROPOSED CONCRETE BARRIER JUNCTION BOX IDENTIFIER (TYPE)
- RM C — TO BE REMOVED BY CONTRACTOR
- AB — TO BE ABANDONED BY CONTRACTOR
- P — PROPOSED ELECTRICAL SERVICE ON PEDESTAL
- POLE BASE

DELAWARE DEPARTMENT OF TRANSPORTATION

ADDENDUMS / REVISIONS

SCALE 0 30 60 90 FEET

US 301 & SR 1 INTERCHANGE

CONTRACT	BRIDGE NO.
T200911302	DESIGNED BY: J.H.R.
COUNTY	
NEW CASTLE	CHECKED BY: J.M.M.

SIGNING, STRIPING & CONDUIT PLAN

SS-16	
SHEET NO.	465
TOTAL SHTS.	491

n:\3653-000\cont\cs1_tb\cadd\SS016U301_1B.dgn
2/4/2015 2:02:24 PM

ITMS CONDUIT RUN SCHEDULE

CO*	# OF CONDUITS	SIZE	LENGTH	B/T/O	AMOUNT AND TYPE OF CABLE/WIRE (SUPPLY AND INSTALLATION BY DELDOT FORCES)
20*	1	4 IN	913 FT**	-	1-144S, 1-24S, & 1-48S

*DENOTES EXISTING CONDUIT
**QUANTITY CONTINUES ON ADJACENT SHEET
***DENOTES CONDUIT INSTALLED BY DELDOT FORCES

B = BORE, T = TRENCH, O = OPEN CUT, BM = BRIDGE MOUNTED

GUARDRAIL SCHEDULE

NO.	ITEM DESCRIPTION / TYPE	BEGIN STA.	OFFSET	LENGTH
090	GALVANIZED STEEL BEAM GUARDRAIL, TYPE 2-31	1839+06.64	-6.03	62.50
091	GUARDRAIL END TREATMENT ATTENUATOR, TYPE 1-31	1837+67.93	5.78	50.00
092	GALVANIZED STEEL BEAM GUARDRAIL, TYPE 1-31	1838+07.06	7.33	100.00
093	GALVANIZED STEEL BEAM GUARDRAIL, TYPE 2-31	1839+06.80	7.41	62.50
094	GALVANIZED STEEL BEAM GUARDRAIL, TYPE 1-31	1839+69.14	7.19	12.50
095	END ANCHORAGE, TYPE 31	1839+81.61	7.17	12.50

SIGNING LEGEND

1	REMOVE EXISTING SIGN
2	EXISTING SIGN TO REMAIN
3	PLACE NEW SIGN
4	RENEW EXISTING SIGN
5	REPOSITION EXISTING SIGN

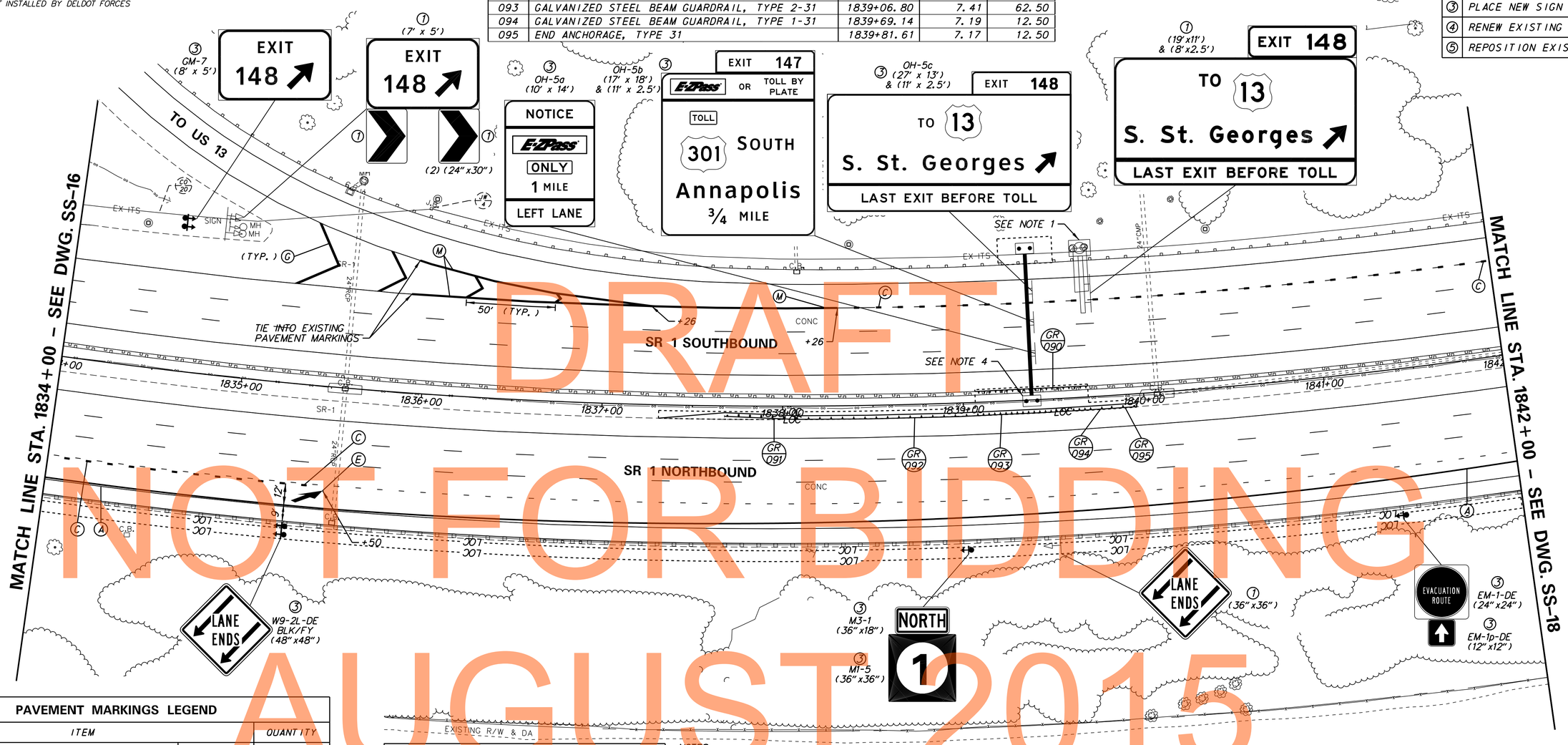

DRAFT
NOT FOR BIDDING
AUGUST 2015

PAVEMENT MARKINGS LEGEND

SYMBOL	ITEM		QUANTITY
A	8" SOLID WHITE CONTRAST EPOXY RESIN PAINT, 3"BLACK, 5"WHITE	ITEM 748557	818 LF
		ITEM 748548	818 LF
B	5" SOLID YELLOW EPOXY RESIN PAINT (ITEM 748548)		0 LF
C	13" DOTTED WHITE RETROREFLECTIVE PREFORMED PATTERNED CONTRAST PAVEMENT MARKINGS, 3' LINE & 9' GAP, 1.5"BLACK, 10"WHITE, 1.5"BLACK (ITEM 748567)		129 LF
D	8" BROKEN WHITE RETROREFLECTIVE PREFORMED PATTERNED CONTRAST PAVEMENT MARKINGS, 10' LINE & 30' GAP, 1.5"BLACK, 5"WHITE, 1.5"BLACK (ITEM 748566)		0 LF
E	RETROREFLECTIVE PREFORMED PATTERNED MARKINGS, SYMBOL/LEGEND (ITEM 748529)		0 SF
F	12" SOLID WHITE EPOXY RESIN PAINT (ITEM 748509)		0 LF
G	12" SOLID WHITE RETROREFLECTIVE PREFORMED PATTERNED MARKINGS (ITEM NO. 748513)		110 LF
H	5" SOLID WHITE EPOXY RESIN PAINT (ITEM 748548)		0 LF
J	5" BROKEN WHITE EPOXY RESIN PAINT PERMANENT PAVEMENT STRIPING, 10' LINE, 30' GAP (ITEM 748548)		0 LF
K	5" BROKEN WHITE EPOXY RESIN PAINT PERMANENT PAVEMENT STRIPING, 3' LINE, 9' GAP (ITEM 748548)		0 LF
L	PERMANENT PAVEMENT STRIPING, SYMBOL/LEGEND, ALKYD THERMOPLASTIC (ITEM 748015)		0 SF
M	10" SOLID WHITE EPOXY RESIN PAINT (ITEM 748549)		362 LF
RM/C	REMOVE EXISTING PAVEMENT STRIPING BY CONTRACTOR (ITEM 748530)		0 SF

ITMS LEGEND

- ITMS-CON – PROPOSED MULTIDUCT ITMS CONDUIT
- EX-ITS – EXISTING ITMS CONDUIT
- ITMS-CON – ITMS CONDUIT INSTALLED IN PHASE 1
- CA/X – ITMS CABINET AND IDENTIFIER
- ITMS CONDUIT JUNCTION WELL
- JW/X – JUNCTION WELL IDENTIFIER (TYPE) (EXISTING AND PROPOSED)
- CO/X – CONDUIT RUN IDENTIFIER (# OF RUN) (EXISTING AND PROPOSED)
- PB/X – POLE BASE IDENTIFIER (TYPE) (EXISTING AND PROPOSED)
- JB/X – PROPOSED CONCRETE BARRIER JUNCTION BOX IDENTIFIER (TYPE)
- RM/C – TO BE REMOVED BY CONTRACTOR
- AB – TO BE ABANDONED BY CONTRACTOR
- P – PROPOSED ELECTRICAL SERVICE ON PEDESTAL
- POLE BASE

NOTES:

1. REMOVE EXISTING CANTILEVER SIGN STRUCTURE, SIGNS, SUPPORTS, AND FOUNDATION 12 INCHES BELOW GRADE.
2. PLOWABLE RAISED PAVEMENT MARKERS (RPMS) SHALL BE INSTALLED THROUGHOUT THE LIMITS OF THE PROPOSED PAVEMENT STRIPING AS PER FIGURES 3B-15A THROUGH 3B-15H OF THE DELAWARE MUTCD, AS APPLICABLE BELOW:
   - IN AREAS WHERE NEW LANES HAVE BEEN ADDED INSTALL RPMS AS NOTED ABOVE.
   - IN AREAS WHERE EXISTING LENSES WERE REMOVED DURING CONSTRUCTION PHASING, NEW LENSES ONLY SHALL BE INSTALLED IN THOSE AEAS WHERE PROPOSED STRIPING MATCHES EXISTING.
   - IN AREAS WHERE RPMS EXISTED PREVIOUSLY, BUT LANES HAVE NOW BEEN REMOVED IN THE ULTIMATE CONFIGURATION THE RPM HOUSING SHALL REMAIN WITH NO NEW LENS INSTALLED.
3. INSTALL POST MOUNTED AND/OR BARRIER MOUNTED DELINEATORS ALONG THE LIMITS OF THE PROPOSED CONSTRUCTION AS PER PART 3 OF THE DELAWARE MUTCD.
4. FOUNDATION EXCAVATION AND DISTURBED AREAS SHALL BE RESTORED TO EXISTING GRADES. POSITIVE DRAINAGE SHALL BE MAINTAINED AROUND FOOTING PEDESTAL EXTENSION TO MINIMIZE PONDING ON THE UPSTREAM FACE.

OVERHEAD SIGN SUPPORT SCHEDULE (SEE DWG. NO. SS-29)

SIGN NUMBER	NUMBER OF SUPPORTS	SPACING (FEET)	SUPPORT LENGTH (FEET)(LEFT TO RIGHT)
OH-5a	2	2, 6, 2	14, 14
OH-5b	3	2.5, 6, 6, 2.5	18, 20.5, 20.5
OH-5c	4	3, 7, 7, 7, 3	13, 13, 15.5, 15.5

DELAWARE DEPARTMENT OF TRANSPORTATION

ADDENDUMS / REVISIONS

SCALE 0 30 60 90 FEET

US 301 & SR 1 INTERCHANGE

CONTRACT T200911302
COUNTY NEW CASTLE
BRIDGE NO.
DESIGNED BY: J.H.R.
CHECKED BY: J.M.M.

SIGNING, STRIPING & CONDUIT PLAN

SS-17
SHEET NO. 466
TOTAL SHTS. 491

n:\3653-000\contract\ tb\cadd\Traffic\AET\SS0170301_1B_AET.dgn
2/4/2013 2:14:43 PM

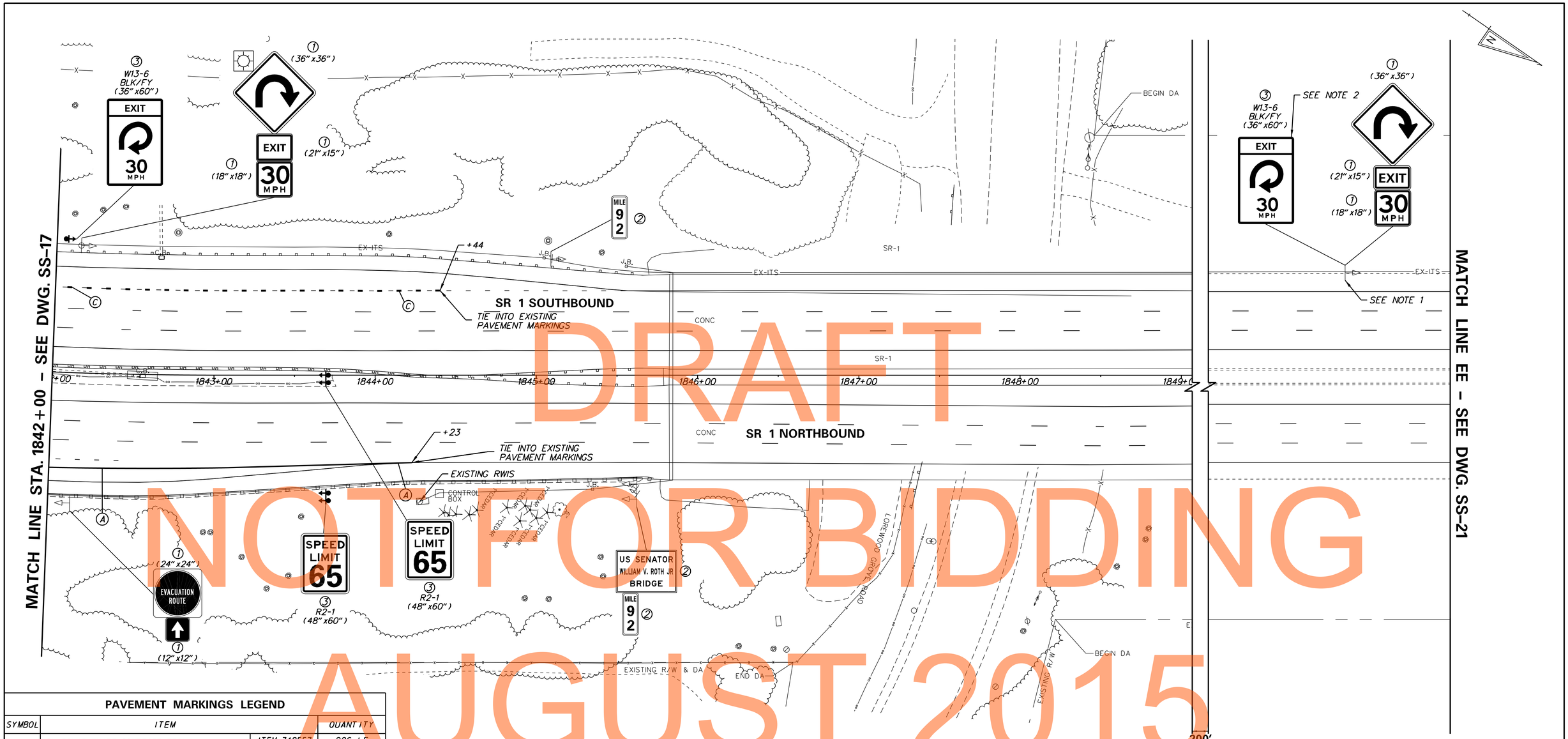

DRAFT
NOT FOR BIDDING
AUGUST 2015

PAVEMENT MARKINGS LEGEND

SYMBOL	ITEM		QUANTITY
Ⓐ	8" SOLID WHITE CONTRAST EPOXY RESIN PAINT, 3"BLACK, 5"WHITE	ITEM 748557	226 LF
		ITEM 748548	226 LF
Ⓑ	5" SOLID YELLOW EPOXY RESIN PAINT (ITEM 748548)		0 LF
Ⓒ	13" DOTTED WHITE RETROREFLECTIVE PREFORMED PATTERNED CONTRAST PAVEMENT MARKINGS, 3' LINE & 9' GAP, 1.5"BLACK, 10"WHITE, 1.5"BLACK (ITEM 748567)		61 LF
Ⓓ	8" BROKEN WHITE RETROREFLECTIVE PREFORMED PATTERNED CONTRAST PAVEMENT MARKINGS, 10' LINE & 30' GAP, 1.5"BLACK, 5"WHITE, 1.5"BLACK (ITEM 748566)		0 LF
Ⓔ	RETROREFLECTIVE PREFORMED PATTERNED MARKINGS, SYMBOL/LEGEND (ITEM 748529)		0 SF
Ⓕ	12" SOLID WHITE EPOXY RESIN PAINT (ITEM 748509)		0 LF
Ⓖ	12" SOLID WHITE RETROREFLECTIVE PREFORMED PATTERNED MARKINGS (ITEM NO. 748513)		0 LF
Ⓗ	5" SOLID WHITE EPOXY RESIN PAINT (ITEM 748548)		0 LF
Ⓙ	5" BROKEN WHITE EPOXY RESIN PAINT PERMANENT PAVEMENT STRIPING, 10' LINE, 30' GAP (ITEM 748548)		0 LF
Ⓚ	5" BROKEN WHITE EPOXY RESIN PAINT PERMANENT PAVEMENT STRIPING, 3' LINE, 9' GAP (ITEM 748548)		0 LF
Ⓛ	PERMANENT PAVEMENT STRIPING, SYMBOL/LEGEND, ALKYD THERMOPLASTIC (ITEM 748015)		0 SF
Ⓜ	10" SOLID WHITE EPOXY RESIN PAINT (ITEM 748549)		0 LF
RMA Ⓒ	REMOVE EXISTING PAVEMENT STRIPING BY CONTRACTOR (ITEM 748530)		0 SF

NOTES:

1. EXISTING BRIDGE MOUNTED SIGN SUPPORT TO REMAIN FOR RE-USE.
2. INSTALL SIGN ON EXISTING BRIDGE MOUNTED SIGN SUPPORT.
3. PLOWABLE RAISED PAVEMENT MARKERS (RPMS) SHALL BE INSTALLED THROUGHOUT THE LIMITS OF THE PROPOSED PAVEMENT STRIPING AS PER FIGURES 3B-15A THROUGH 3B-15H OF THE DELAWARE MUTCD, AS APPLICABLE BELOW:
   - IN AREAS WHERE NEW LANES HAVE BEEN ADDED INSTALL RPMS AS NOTED ABOVE.
   - IN AREAS WHERE EXISTING LENSES WERE REMOVED DURING CONSTRUCTION PHASING, NEW LENSES ONLY SHALL BE INSTALLED IN THOSE AEAS WHERE PROPOSED STRIPING MATCHES EXISTING.
   - IN AREAS WHERE RPMS EXISTED PREVIOUSLY, BUT LANES HAVE NOW BEEN REMOVED IN THE ULTIMATE CONFIGURATION THE RPM HOUSING SHALL REMAIN WITH NO NEW LENS INSTALLED.

SIGNING LEGEND

①	REMOVE EXISTING SIGN
②	EXISTING SIGN TO REMAIN
③	PLACE NEW SIGN
④	RENEW EXISTING SIGN
⑤	REPOSITION EXISTING SIGN

n:\31653-000\contract tb\cadd\SS018U301_1B.dgn
2/4/2013 2:02:51 PM

DELAWARE DEPARTMENT OF TRANSPORTATION

ADDENDUMS / REVISIONS

SCALE 0 30 60 90 FEET

US 301 & SR 1 INTERCHANGE

CONTRACT	BRIDGE NO.
T200911302	DESIGNED BY: J.H.R.
COUNTY	CHECKED BY: J.M.M.
NEW CASTLE	

SIGNING, STRIPING & CONDUIT PLAN

SS-18
SHEET NO.
467
TOTAL SHTS.
491

PAVEMENT MARKINGS LEGEND

SYMBOL	ITEM		QUANTITY
A	8" SOLID WHITE CONTRAST EPOXY RESIN PAINT, 3"BLACK, 5"WHITE	ITEM 748557	415 LF
		ITEM 748548	415 LF
B	5" SOLID YELLOW EPOXY RESIN PAINT (ITEM 748548)		1,025 LF
C	13" DOTTED WHITE RETROREFLECTIVE PREFORMED PATTERNED CONTRAST PAVEMENT MARKINGS, 3' LINE & 9' GAP, 1.5"BLACK, 10"WHITE, 1.5"BLACK (ITEM 748567)		0 LF
D	8" BROKEN WHITE RETROREFLECTIVE PREFORMED PATTERNED CONTRAST PAVEMENT MARKINGS, 10' LINE & 30' GAP, 1.5"BLACK, 5"WHITE, 1.5"BLACK (ITEM 748566)		160 LF
E	RETROREFLECTIVE PREFORMED PATTERNED MARKINGS, SYMBOL/LEGEND (ITEM 748529)		0 SF
F	12" SOLID WHITE EPOXY RESIN PAINT (ITEM 748509)		7 LF
G	12" SOLID WHITE RETROREFLECTIVE PREFORMED PATTERNED MARKINGS (ITEM NO. 748513)		0 LF
H	5" SOLID WHITE EPOXY RESIN PAINT (ITEM 748548)		235 LF
J	5" BROKEN WHITE EPOXY RESIN PAINT PERMANENT PAVEMENT STRIPING, 10' LINE, 30' GAP (ITEM 748548)		60 LF
K	5" BROKEN WHITE EPOXY RESIN PAINT PERMANENT PAVEMENT STRIPING, 3' LINE, 9' GAP (ITEM 748548)		0 LF
L	PERMANENT PAVEMENT STRIPING, SYMBOL/LEGEND, ALKYD THERMOPLASTIC (ITEM 748015)		0 SF
M	10" SOLID WHITE EPOXY RESIN PAINT (ITEM 748549)		780 LF
RM/C	REMOVE EXISTING PAVEMENT STRIPING BY CONTRACTOR (ITEM 748530)		0 SF

ITMS LEGEND

- ITMS-CON — PROPOSED MULTIDUCT ITMS CONDUIT
- EX-ITS — EXISTING ITMS CONDUIT
- ITMS-CON — ITMS CONDUIT INSTALLED IN PHASE 1
- CA/X — ITMS CABINET AND IDENTIFIER
- ITMS CONDUIT JUNCTION WELL
- JW/X JB/X — JUNCTION WELL IDENTIFIER (TYPE) (EXISTING AND PROPOSED)
- CO/X CO/X — CONDUIT RUN IDENTIFIER (# OF RUN) (EXISTING AND PROPOSED)
- PB/X PB/X — POLE BASE IDENTIFIER (TYPE) (EXISTING AND PROPOSED)
- JB/X — PROPOSED CONCRETE BARRIER JUNCTION BOX IDENTIFIER (TYPE)
- RM/C — TO BE REMOVED BY CONTRACTOR
- AB — TO BE ABANDONED BY CONTRACTOR
- P — PROPOSED ELECTRICAL SERVICE ON PEDESTAL
- POLE BASE

SIGNING LEGEND

1	REMOVE EXISTING SIGN
2	EXISTING SIGN TO REMAIN
3	PLACE NEW SIGN
4	RENEW EXISTING SIGN
5	REPOSITION EXISTING SIGN

ITMS CONDUIT RUN SCHEDULE

CO*	# OF CONDUITS	SIZE	LENGTH	B/T/O	AMOUNT AND TYPE OF CABLE/WIRE (SUPPLY AND INSTALLATION BY DELDOT FORCES)
17***	1	2 IN	7 FT	T	(2)#4, (8)#6, (1)#6 GROUND
18***	1	2 IN	12 FT	T	(3)#2, (1)#2 GROUND
42	1	2 IN	116 FT**	B	(2)#4, (8)#6, (1)#6 GROUND
48	1	2 IN	130 FT	B	(2)#4, (8)#6, (1)#6 GROUND
49	1	2 IN	110 FT	T	(2)#4, (8)#6, (1)#6 GROUND
50	1	2 IN	106 FT	B	(2)#4, (8)#6, (1)#6 GROUND
51	1	2 IN	142 FT	B	(2)#4, (8)#6, (1)#6 GROUND

*DENOTES EXISTING CONDUIT
**QUANTITY CONTINUES ON ADJACENT SHEET
***DENOTES CONDUIT INSTALLED BY DELDOT FORCES

B = BORE, T = TRENCH, O = OPEN CUT, BM = BRIDGE MOUNTED

NOTES:

1. PLOWABLE RAISED PAVEMENT MARKERS (RPMS) SHALL BE INSTALLED THROUGHOUT THE LIMITS OF THE PROPOSED PAVEMENT STRIPING AS PER FIGURES 3B-15A THROUGH 3B-15H OF THE DELAWARE MUTCD, AS APPLICABLE BELOW:
   - IN AREAS WHERE NEW LANES HAVE BEEN ADDED INSTALL RPMS AS NOTED ABOVE.
   - IN AREAS WHERE EXISTING LENSES WERE REMOVED DURING CONSTRUCTION PHASING, NEW LENSES ONLY SHALL BE INSTALLED IN THOSE AEAS WHERE PROPOSED STRIPING MATCHES EXISTING.
   - IN AREAS WHERE RPMS EXISTED PREVIOUSLY, BUT LANES HAVE NOW BEEN REMOVED IN THE ULTIMATE CONFIGURATION THE RPM HOUSING SHALL REMAIN WITH NO NEW LENS INSTALLED.
2. PROPOSED 60 AMP, 120/240V, SINGLE PHASE, 3 WIRE ELECTRICAL SERVICE ON PEDESTAL INSTALLED BY DELDOT FORCES. EXACT SERVICE LOCATION OF ELECTRICAL SERVICE TO BE COORDINATED WITH DELMARVA POWER PENDING UTILITY RELOCATION DESIGN. A 2P (240V) CIRCUIT BREAKER SHALL BE PROVIDED FOR THE DEDICATED RWIS CIRCUIT.
3. REMOVE ABANDONED EXISTING ELECTRICAL SERVICE AND PEDESTAL EQUIPMENT.
4. INSTALL POST MOUNTED AND/OR BARRIER MOUNTED DELINEATORS ALONG THE LIMITS OF THE PROPOSED CONSTRUCTION AS PER PART 3 OF THE DELAWARE MUTCD.
5. ALL SIGNS SHOWN SCREENED ON THIS PLAN SHEET ARE PROPOSED BY OTHERS UNDER CONTRACT NO. T201011302.
6. CONTRACTOR SHALL COORDINATE EXACT ELECTRICAL SERVICE LOCATION WITH DELMARVA POWER PENDING UTILITY RELOCATION DESIGN.
7. CONDUIT RUN NOS. 17 & 18 SHALL BE RIGID GALVANIZED STEEL INSTALLED BY DELDOT FORCES.
8. REMOVE EXISTING SIGN UPON OPENING OF RAMP R IN CONSTRUCTION PHASE 3.

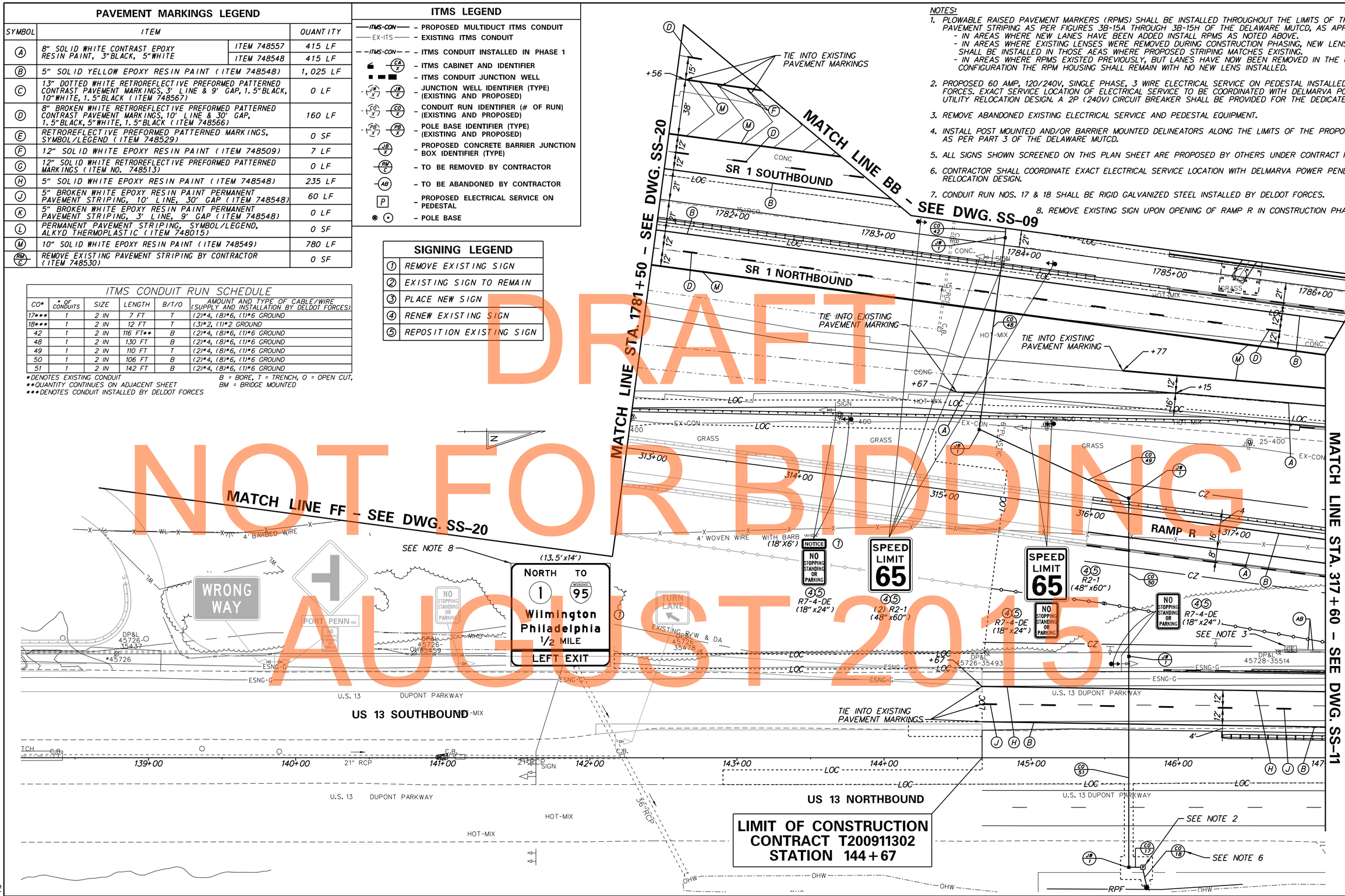

DRAFT
NOT FOR BIDDING
AUGUST 2015

DELAWARE DEPARTMENT OF TRANSPORTATION

ADDENDUMS / REVISIONS

SCALE 0 30 60 90 FEET

US 301 & SR 1 INTERCHANGE

CONTRACT	BRIDGE NO.	RW1-3R
T200911302	DESIGNED BY: J.H.R.	
COUNTY	CHECKED BY: J.M.M.	
NEW CASTLE		

SIGNING, STRIPING & CONDUIT PLAN

SS-19	
SHEET NO.	468
TOTAL SHTS.	491

n:\3653-000\contract_b\cadd\SS019\J301_1B.dgn
2/4/2015 2:03:02 PM

NOTES:

1. PLOWABLE RAISED PAVEMENT MARKERS (RPMS) SHALL BE INSTALLED THROUGHOUT THE LIMITS OF THE PROPOSED PAVEMENT STRIPING AS PER FIGURES 3B-15A THROUGH 3B-15H OF THE DELAWARE MUTCD, AS APPLICABLE BELOW:
   - IN AREAS WHERE NEW LANES HAVE BEEN ADDED INSTALL RPMS AS NOTED ABOVE.
   - IN AREAS WHERE EXISTING LENSES WERE REMOVED DURING CONSTRUCTION PHASING, NEW LENSES ONLY SHALL BE INSTALLED IN THOSE AEAS WHERE PROPOSED STRIPING MATCHES EXISTING.
   - IN AREAS WHERE RPMS EXISTED PREVIOUSLY, BUT LANES HAVE NOW BEEN REMOVED IN THE ULTIMATE CONFIGURATION THE RPM HOUSING SHALL REMAIN WITH NO NEW LENS INSTALLED.
2. INSTALL POST MOUNTED AND/OR BARRIER MOUNTED DELINEATORS ALONG THE LIMITS OF THE PROPOSED CONSTRUCTION AS PER PART 3 OF THE DELAWARE MUTCD.
3. ALL SIGNS SHOWN SCREENED ON THIS PLAN ARE PROPOSED BY OTHERS IN CONTRACT NO. T201011302.

SIGNING LEGEND	
1	REMOVE EXISTING SIGN
2	EXISTING SIGN TO REMAIN
3	PLACE NEW SIGN
4	RENEW EXISTING SIGN
5	REPOSITION EXISTING SIGN

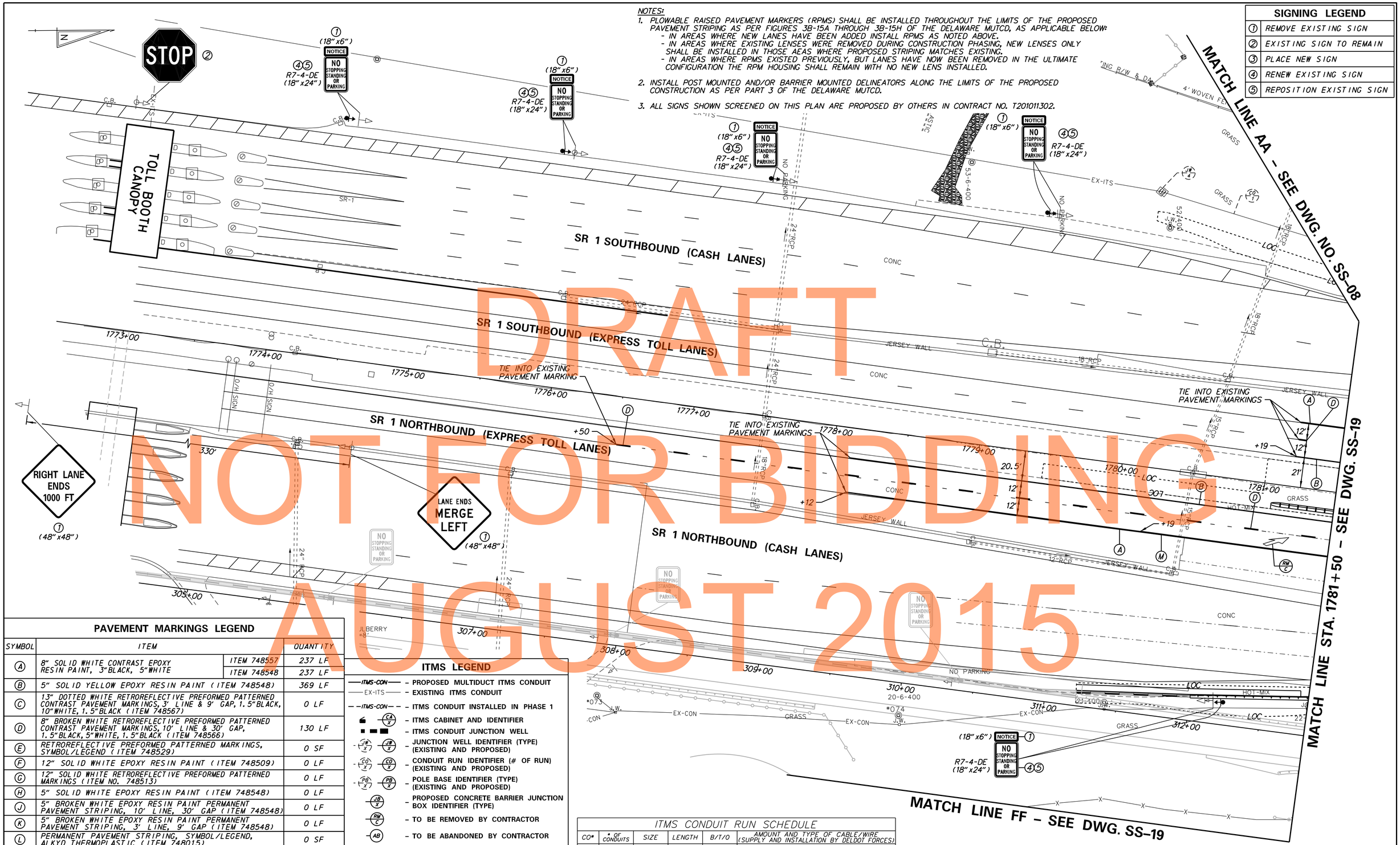

DRAFT
NOT FOR BIDDING
AUGUST 2015

PAVEMENT MARKINGS LEGEND

SYMBOL	ITEM		QUANTITY
A	8" SOLID WHITE CONTRAST EPOXY RESIN PAINT, 3" BLACK, 5" WHITE	ITEM 748557	237 LF
		ITEM 748548	237 LF
B	5" SOLID YELLOW EPOXY RESIN PAINT (ITEM 748548)		369 LF
C	13" DOTTED WHITE RETROREFLECTIVE PREFORMED PATTERNED CONTRAST PAVEMENT MARKINGS, 3' LINE & 9' GAP, 1.5" BLACK, 10" WHITE, 1.5" BLACK (ITEM 748567)		0 LF
D	8" BROKEN WHITE RETROREFLECTIVE PREFORMED PATTERNED CONTRAST PAVEMENT MARKINGS, 10' LINE & 30' GAP, 1.5" BLACK, 5" WHITE, 1.5" BLACK (ITEM 748566)		130 LF
E	RETROREFLECTIVE PREFORMED PATTERNED MARKINGS, SYMBOL/LEGEND (ITEM 748529)		0 SF
F	12" SOLID WHITE EPOXY RESIN PAINT (ITEM 748509)		0 LF
G	12" SOLID WHITE RETROREFLECTIVE PREFORMED PATTERNED MARKINGS (ITEM NO. 748513)		0 LF
H	5" SOLID WHITE EPOXY RESIN PAINT (ITEM 748548)		0 LF
J	5" BROKEN WHITE EPOXY RESIN PAINT PERMANENT PAVEMENT STRIPING, 10' LINE, 30' GAP (ITEM 748548)		0 LF
K	5" BROKEN WHITE EPOXY RESIN PAINT PERMANENT PAVEMENT STRIPING, 3' LINE, 9' GAP (ITEM 748548)		0 LF
L	PERMANENT PAVEMENT STRIPING, SYMBOL/LEGEND, ALKYD THERMOPLASTIC (ITEM 748015)		0 SF
M	10" SOLID WHITE EPOXY RESIN PAINT (ITEM 748549)		132 LF
RM/C	REMOVE EXISTING PAVEMENT STRIPING BY CONTRACTOR (ITEM 748530)		42 SF

ITMS LEGEND

- ITMS-CON — PROPOSED MULTIDUCT ITMS CONDUIT
- EX-ITS — EXISTING ITMS CONDUIT
- ITMS-CON — ITMS CONDUIT INSTALLED IN PHASE 1
- CA/X — ITMS CABINET AND IDENTIFIER
- ITMS CONDUIT JUNCTION WELL
- JW/X — JUNCTION WELL IDENTIFIER (TYPE) (EXISTING AND PROPOSED)
- CQ/X — CONDUIT RUN IDENTIFIER (# OF RUN) (EXISTING AND PROPOSED)
- PB/X — POLE BASE IDENTIFIER (TYPE) (EXISTING AND PROPOSED)
- JB/X — PROPOSED CONCRETE BARRIER JUNCTION BOX IDENTIFIER (TYPE)
- RM/C — TO BE REMOVED BY CONTRACTOR
- AB — TO BE ABANDONED BY CONTRACTOR
- P — PROPOSED ELECTRICAL SERVICE ON PEDESTAL
- POLE BASE

ITMS CONDUIT RUN SCHEDULE

CO*	# OF CONDUITS	SIZE	LENGTH	B/T/O	AMOUNT AND TYPE OF CABLE/WIRE (SUPPLY AND INSTALLATION BY DELDOT FORCES)
1*	1	4 IN	371 FT**	T	1-144S, 1-24S, & 1-48S

*DENOTES EXISTING CONDUIT
**QUANTITY CONTINUES ON ADJACENT SHEET
***DENOTES CONDUIT INSTALLED BY DELDOT FORCES

B = BORE, T = TRENCH, O = OPEN CUT, BM = BRIDGE MOUNTED

DELAWARE DEPARTMENT OF TRANSPORTATION

ADDENDUMS / REVISIONS

SCALE 0 30 60 90 FEET

US 301 & SR 1 INTERCHANGE

CONTRACT	BRIDGE NO.
T200911302	DESIGNED BY: J.H.R.
COUNTY	
NEW CASTLE	CHECKED BY: J.M.M.

SIGNING, STRIPING & CONDUIT PLAN

SS-20
SHEET NO. 469
TOTAL SHTS. 491

n:\3653-000\contract tb\cadd\SS020\301_18.dgn
2/4/2015 2:03:13 PM

NOTES:

1. PLOWABLE RAISED PAVEMENT MARKERS (RPMS) SHALL BE INSTALLED THROUGHOUT THE LIMITS OF THE PROPOSED PAVEMENT STRIPING AS PER FIGURES 3B-15A THROUGH 3B-15H OF THE DELAWARE MUTCD, AS APPLICABLE BELOW:
   - IN AREAS WHERE NEW LANES HAVE BEEN ADDED INSTALL RPMS AS NOTED ABOVE.
   - IN AREAS WHERE EXISTING LENSES WERE REMOVED DURING CONSTRUCTION PHASING, NEW LENSES ONLY SHALL BE INSTALLED IN THOSE AEAS WHERE PROPOSED STRIPING MATCHES EXISTING.
   - IN AREAS WHERE RPMS EXISTED PREVIOUSLY, BUT LANES HAVE NOW BEEN REMOVED IN THE ULTIMATE CONFIGURATION THE RPM HOUSING SHALL REMAIN WITH NO NEW LENS INSTALLED.
2. REMOVE EXISTING SIGN AND STEEL SUPPORTS ONLY, EXISTING "TRAFFCON" VMS, POLE MOUNTED CABINET, AND SOLAR PANEL TO BE RELOCATED TO PROPOSED SIGN GM-8.
3. INSTALL EXISTING "TRAFFCON" VMS, POLE MOUNTED CABINET, AND SOLAR PANEL TO NEW GALVANIZED STEEL SIGN SUPPORTS MATCHING EXISTING ATTACHMENT METHOD AND HARDWARE. COST OF RELOCATING EQUIPMENT TO NEW SIGN AND SIGN SUPPORTS WILL NOT BE MEASURED AND PAID FOR BUT WILL BE INCIDENTAL TO ITEM 749556 INSTALLATION OF SIGN ON GROUND MOUNTED POSTS.

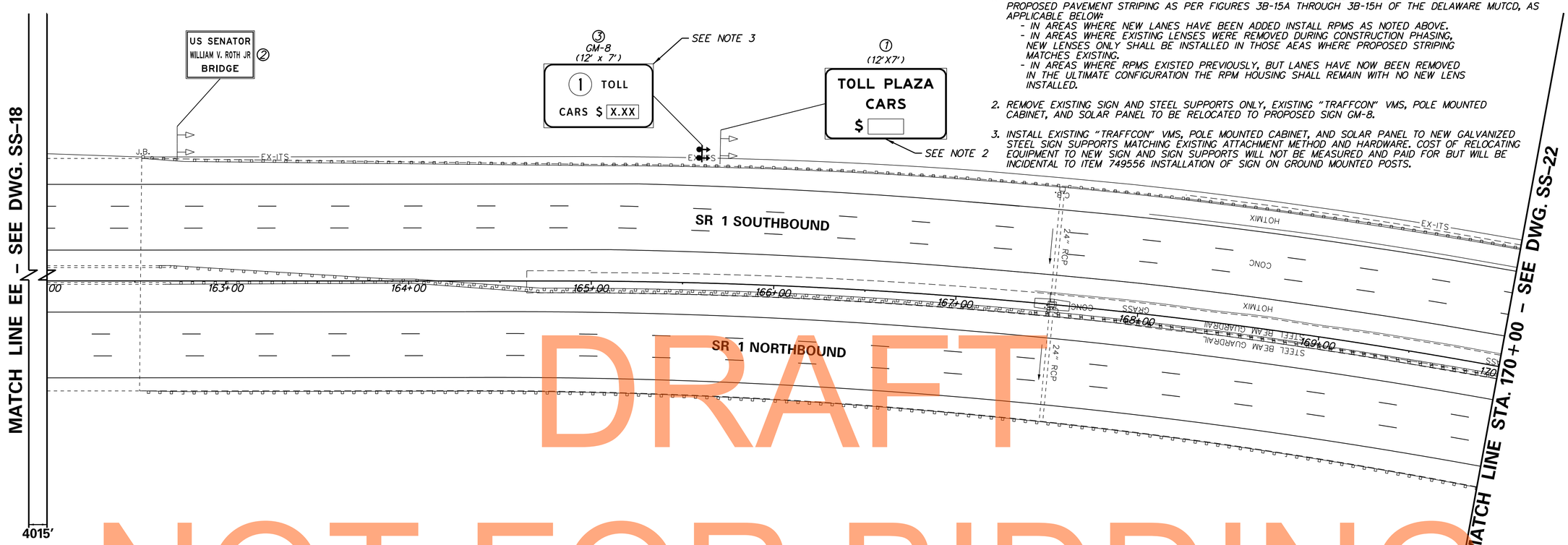

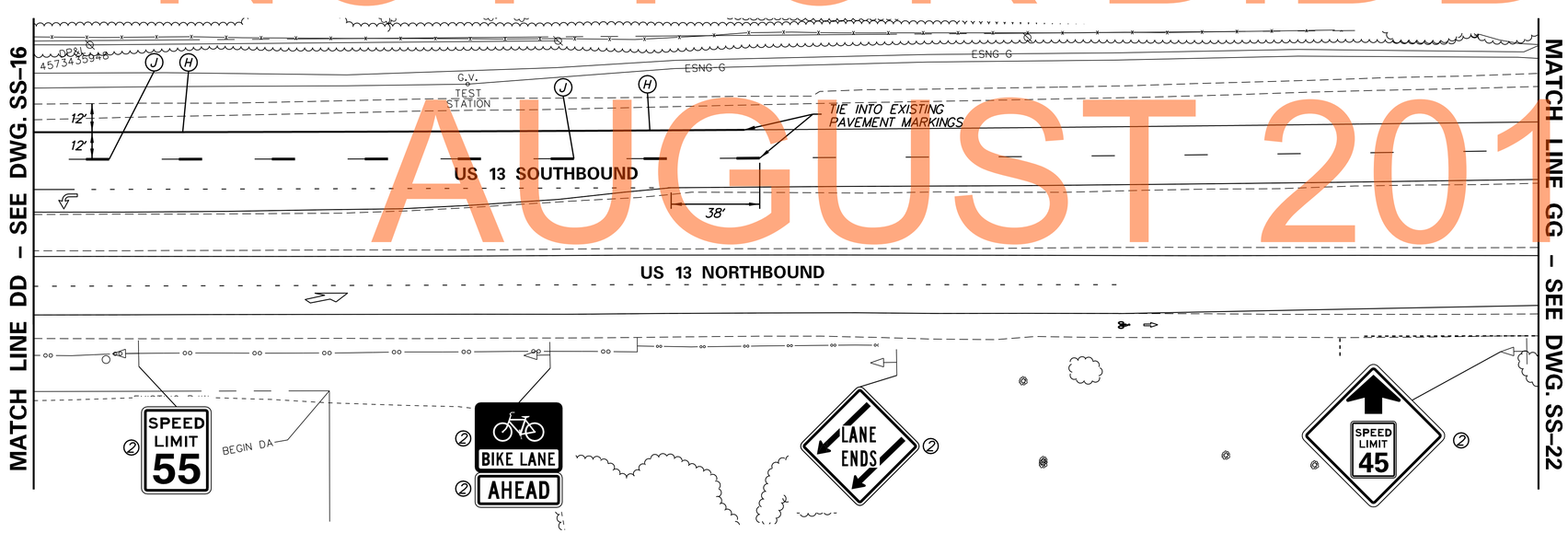

SIGNING LEGEND	
①	REMOVE EXISTING SIGN
②	EXISTING SIGN TO REMAIN
③	PLACE NEW SIGN
④	RENEW EXISTING SIGN
⑤	REPOSITION EXISTING SIGN

PAVEMENT MARKINGS LEGEND			
SYMBOL	ITEM		QUANTITY
A	8" SOLID WHITE CONTRAST EPOXY RESIN PAINT, 3"BLACK, 5"WHITE	ITEM 748557	0 LF
		ITEM 748548	0 LF
B	5" SOLID YELLOW EPOXY RESIN PAINT (ITEM 748548)		0 LF
C	13" DOTTED WHITE RETROREFLECTIVE PREFORMED PATTERNED CONTRAST PAVEMENT MARKINGS, 3' LINE & 9' GAP, 1.5"BLACK, 10"WHITE, 1.5"BLACK (ITEM 748567)		0 LF
D	8" BROKEN WHITE RETROREFLECTIVE PREFORMED PATTERNED CONTRAST PAVEMENT MARKINGS, 10' LINE & 30' GAP, 1.5"BLACK, 5"WHITE, 1.5"BLACK (ITEM 748566)		0 LF
E	RETROREFLECTIVE PREFORMED PATTERNED MARKINGS, SYMBOL/LEGEND (ITEM 748529)		0 SF
F	12" SOLID WHITE EPOXY RESIN PAINT (ITEM 748509)		0 LF
G	12" SOLID WHITE RETROREFLECTIVE PREFORMED PATTERNED MARKINGS (ITEM NO. 748513)		0 LF
H	5" SOLID WHITE EPOXY RESIN PAINT (ITEM 748548)		306 LF
J	5" BROKEN WHITE EPOXY RESIN PAINT PERMANENT PAVEMENT STRIPING, 10' LINE, 30' GAP (ITEM 748548)		80 LF
K	5" BROKEN WHITE EPOXY RESIN PAINT PERMANENT PAVEMENT STRIPING, 3' LINE, 9' GAP (ITEM 748548)		0 LF
L	PERMANENT PAVEMENT STRIPING, SYMBOL/LEGEND, ALKYD THERMOPLASTIC (ITEM 748015)		0 SF
M	10" SOLID WHITE EPOXY RESIN PAINT (ITEM 748549)		0 LF
RM C	REMOVE EXISTING PAVEMENT STRIPING BY CONTRACTOR (ITEM 748530)		0 SF

DRAFT
NOT FOR BIDDING
AUGUST 2015

N:\31653-000\CONTRACT 1B\CADD\SS021U301_1B.dgn
2/5/2015 7:35:39 AM

DELAWARE DEPARTMENT OF TRANSPORTATION

ADDENDUMS / REVISIONS

SCALE 0 30 60 90 FEET

US 301 & SR 1 INTERCHANGE

CONTRACT	BRIDGE NO.	
T200911302	DESIGNED BY: J.H.R.	
COUNTY		
NEW CASTLE	CHECKED BY: J.M.M.	

SIGNING, STRIPING & CONDUIT PLAN

SS-21
SHEET NO.
470
TOTAL SHTS.
491

SIGNING LEGEND	
①	REMOVE EXISTING SIGN
②	EXISTING SIGN TO REMAIN
③	PLACE NEW SIGN
④	RENEW EXISTING SIGN
⑤	REPOSITION EXISTING SIGN

OVERHEAD SIGN SUPPORT SCHEDULE (SEE DWG. NO. SS–29)

SIGN NUMBER	NUMBER OF SUPPORTS	SPACING (FEET)	SUPPORT LENGTH (FEET)(LEFT TO RIGHT)
OH-6a	2	2, 6, 2	14, 14
OH-6b	3	2. 5, 6, 6, 2. 5	15, 17. 5, 17. 5
OH-6c	3	3, 6. 5, 6. 5, 3	13, 15. 5, 15. 5

GUARDRAIL SCHEDULE

NO.	ITEM DESCRIPTION / TYPE	BEGIN STA.	OFFSET	LENGTH
096	END ANCHORAGE, TYPE 31	170+36. 80	-6. 75	12. 50
097	GALVANIZED STEEL BEAM GUARDRAIL, TYPE 1-31	170+50. 94	-6. 72	12. 50
098	GALVANIZED STEEL BEAM GUARDRAIL, TYPE 2-31	170+63. 41	-6. 70	62. 50
099	GALVANIZED STEEL BEAM GUARDRAIL, TYPE 1-31	171+25. 77	-6. 85	112. 50
100	GUARDRAIL END TREATMENT ATTENUATOR, TYPE 1-31	172+37. 99	-7. 27	50. 00
101	GALVANIZED STEEL BEAM GUARDRAIL, TYPE 2-31	170+63. 33	6. 97	62. 50

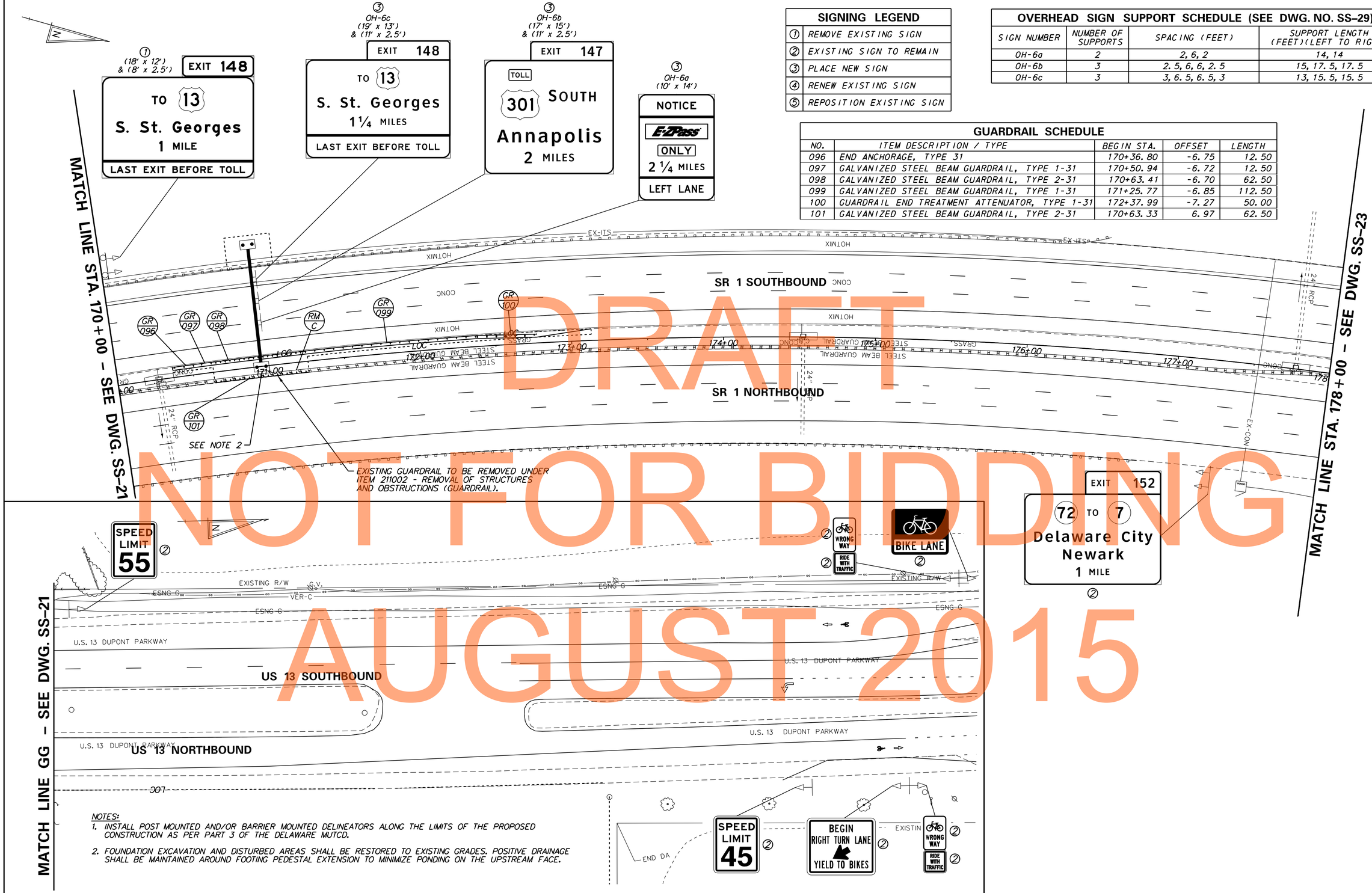

DRAFT
NOT FOR BIDDING
AUGUST 2015

NOTES:
1. INSTALL POST MOUNTED AND/OR BARRIER MOUNTED DELINEATORS ALONG THE LIMITS OF THE PROPOSED CONSTRUCTION AS PER PART 3 OF THE DELAWARE MUTCD.
2. FOUNDATION EXCAVATION AND DISTURBED AREAS SHALL BE RESTORED TO EXISTING GRADES. POSITIVE DRAINAGE SHALL BE MAINTAINED AROUND FOOTING PEDESTAL EXTENSION TO MINIMIZE PONDING ON THE UPSTREAM FACE.

n:\3653-000\contract tb\cadd\SS022U301_1B.dgn
2/5/2013 7:37:45 AM

DELAWARE DEPARTMENT OF TRANSPORTATION

ADDENDUMS / REVISIONS

SCALE 0 30 60 90 FEET

US 301 & SR 1 INTERCHANGE

CONTRACT	BRIDGE NO.	
T200911302	DESIGNED BY: J.H.R.	
COUNTY		
NEW CASTLE	CHECKED BY: J.M.M.	

SIGNING, STRIPING & CONDUIT PLAN

SS–22
SHEET NO.
471
TOTAL SHTS.
491

ITMS CONDUIT RUN SCHEDULE					
CO#	# OF CONDUITS	SIZE	LENGTH	B/T/O	AMOUNT AND TYPE OF CABLE/WIRE (SUPPLY AND INSTALLATION BY DELDOT FORCES)
19***	1	2 IN	4 FT	T	(4)#2, (1)#6 GROUND
52*	1	4 IN	XXX FT	-	1-144S, 1-24S, & 1-48S
53*	1	4 IN	XXX FT	-	1-144S, 1-24S, & 1-48S
54***	1	2 IN	141 FT	T	(3)#2, (1)#2 GROUND
55	1	2 IN	128 FT	T	(4)#2, (1)#6 GROUND
56	1	2.5 IN	32 FT	T	COMMUNICATION CABLES
57	2	3 IN	11 FT	T	POWER AND COMMMUNICATION CABLES

*DENOTES EXISTING CONDUIT
**QUANTITY CONTINUES ON ADJACENT SHEET
***DENOTES CONDUIT INSTALLED BY DELDOT FORCES

B = BORE, T = TRENCH, O = OPEN CUT, BM = BRIDGE MOUNTED

NOTES:

1. THE CONTRACTOR SHALL REMOVE THE EXISTING TYPE 4 JUNCTION WELL AND INSTALL A TYPE 7 JUNCTION WELL IN THE SAME LOCATION. COORDINATE REMOVAL AND INSTALLATION OF JUNCTION WELLS WITH DELDOT TRAFFIC.
2. INSTALL POST MOUNTED AND/OR BARRIER MOUNTED DELINEATORS ALONG THE LIMITS OF THE PROPOSED CONSTRUCTION AS PER PART 3 OF THE DELAWARE MUTCD.
3. PROPOSED 100 AMP, 120/240V, SINGLE PHASE, 3-WIRE ELECTRICAL SERVICE ON PEDESTAL INSTALLED BY DELDOT FORCES.
4. FOUNDATION EXCAVATION AND DISTURBED AREAS SHALL BE RESTORED TO EXISTING GRADES. POSITIVE DRAINAGE SHALL BE MAINTAINED AROUND FOOTING PEDESTAL EXTENSION TO MINIMIZE PONDING ON THE UPSTREAM FACE.
5. CONDUIT RUN NOS. 19 & 54 SHALL BE RIGID GALVANIZED STEEL INSTALLED BY DELDOT FORCES.

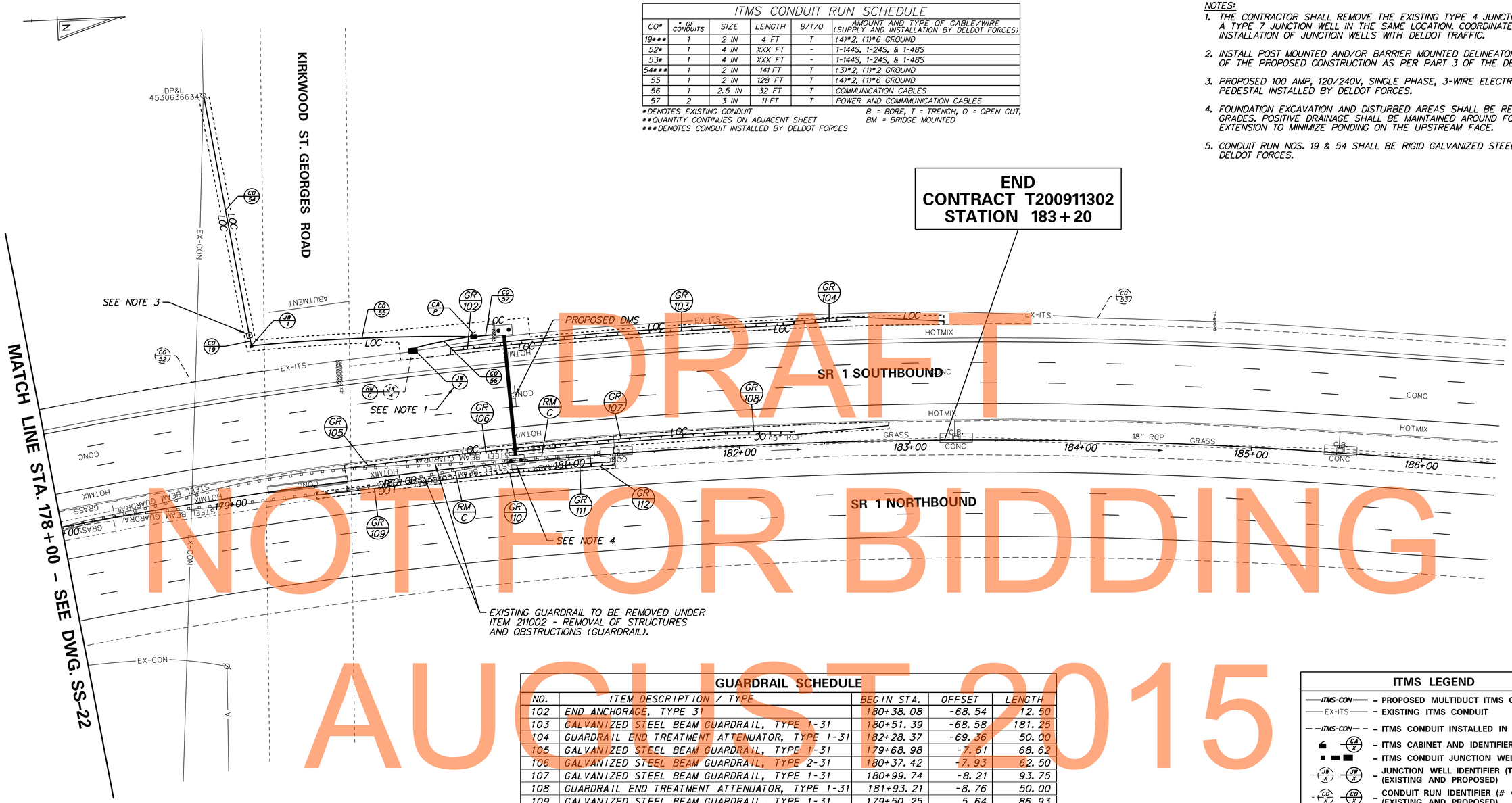

GUARDRAIL SCHEDULE				
NO.	ITEM DESCRIPTION / TYPE	BEGIN STA.	OFFSET	LENGTH
102	END ANCHORAGE, TYPE 31	180+38.08	-68.54	12.50
103	GALVANIZED STEEL BEAM GUARDRAIL, TYPE 1-31	180+51.39	-68.58	181.25
104	GUARDRAIL END TREATMENT ATTENUATOR, TYPE 1-31	182+28.37	-69.36	50.00
105	GALVANIZED STEEL BEAM GUARDRAIL, TYPE 1-31	179+68.98	-7.61	68.62
106	GALVANIZED STEEL BEAM GUARDRAIL, TYPE 2-31	180+37.42	-7.93	62.50
107	GALVANIZED STEEL BEAM GUARDRAIL, TYPE 1-31	180+99.74	-8.21	93.75
108	GUARDRAIL END TREATMENT ATTENUATOR, TYPE 1-31	181+93.21	-8.76	50.00
109	GALVANIZED STEEL BEAM GUARDRAIL, TYPE 1-31	179+50.25	5.64	86.93
110	GALVANIZED STEEL BEAM GUARDRAIL, TYPE 2-31	180+37.35	6.05	62.50
111	GALVANIZED STEEL BEAM GUARDRAIL, TYPE 1-31	180+99.94	6.49	12.50
112	END ANCHORAGE, TYPE 31	181+12.47	6.47	12.50

ITMS LEGEND	
—ITMS-CON—	- PROPOSED MULTIDUCT ITMS CONDUIT
—EX-ITS—	- EXISTING ITMS CONDUIT
– –ITMS-CON– –	- ITMS CONDUIT INSTALLED IN PHASE 1
CA X	- ITMS CABINET AND IDENTIFIER
	- ITMS CONDUIT JUNCTION WELL
JW X / JB X	- JUNCTION WELL IDENTIFIER (TYPE) (EXISTING AND PROPOSED)
CO X / CO X	- CONDUIT RUN IDENTIFIER (# OF RUN) (EXISTING AND PROPOSED)
PB X / PB X	- POLE BASE IDENTIFIER (TYPE) (EXISTING AND PROPOSED)
JB X	- PROPOSED CONCRETE BARRIER JUNCTION BOX IDENTIFIER (TYPE)
RM C	- TO BE REMOVED BY CONTRACTOR
AB	- TO BE ABANDONED BY CONTRACTOR
P	- PROPOSED ELECTRICAL SERVICE ON PEDESTAL
	- POLE BASE

SIGNING LEGEND	
1	REMOVE EXISTING SIGN
2	EXISTING SIGN TO REMAIN
3	PLACE NEW SIGN
4	RENEW EXISTING SIGN
5	REPOSITION EXISTING SIGN

NOT FOR BIDDING
AUGUST 2015

DELAWARE DEPARTMENT OF TRANSPORTATION

ADDENDUMS / REVISIONS

SCALE 0 30 60 90 FEET

US 301 & SR 1 INTERCHANGE

CONTRACT T200911302 | COUNTY NEW CASTLE | BRIDGE NO. | DESIGNED BY: J.H.R. | CHECKED BY: J.M.M.

SIGNING, STRIPING & CONDUIT PLAN

SS-23 | SHEET NO. 472 | TOTAL SHTS. 491

n:\31653-000\contract\tb\code\SS023U301_TB.dgn 2/5/2013 7:39:42 AM

PANEL DESIGNATION	DWG. NO.	QUANTITY	LEGEND	SIZE AREA (SF)	SIZE WIDTH	SIZE HEIGHT	COLOR LEGEND	COLOR BCKGRND	BORDER THICKNESS	BORDER RADIUS	ARROW	SHEILD	REMARKS
GM-2	SS-09	1	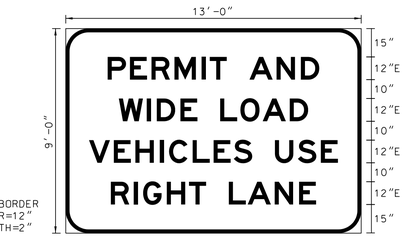	117	13'-0"	9'-0"	BLK	W	2"	12"	---	---	EXTRUDED ALUMINUM
OH-1a	SS-11	1	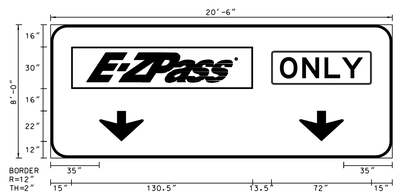	164	20'-6"	8'-0"	W	G	2"	12"	(2) STD. DOWN ARROW @0°	EZ-30, ONLY-24	EXTRUDED ALUMINUM SEE DWG. SS-27 FOR E-ZPASS AND ONLY LOGO DETAILS
OH-1b	SS-11	1	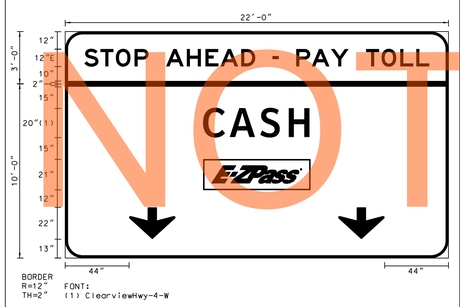	66	22'-0"	3'-0"	BLK	FY	2"	12"	---	---	EXTRUDED ALUMINUM
				220	22'-0"	10'-0"	W	G	2"	12"	(2) STD. DOWN ARROW @0°	EZ-21	EXTRUDED ALUMINUM SEE DWG. SS-27 FOR E-ZPASS LOGO DETAILS
GM-1	SS-12	1	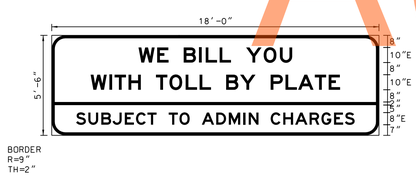	99	18'-0"	5'-6"	W	BLK	2"	9"	---	---	EXTRUDED ALUMINUM

PANEL DESIGNATION	DWG. NO.	QUANTITY	LEGEND	SIZE AREA	SIZE WIDTH	SIZE HEIGHT	COLOR LEGEND	COLOR BCKGRND	BORDER THICKNESS	BORDER RADIUS	ARROW	SHEILD	REMARKS
OH-2b	SS-13	1	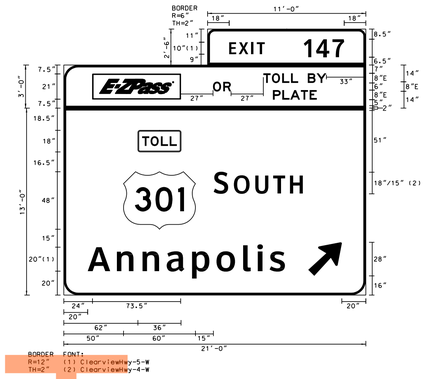	27.5	11'-0"	2'-6"	W	G	2"	6"	---	---	EXTRUDED ALUMINUM
				336	21'-0"	16'-0"	W	G	2"	12"	STD. UP ARROW @ 45°	EZ-21, M4-15 (36"x18") M1-4 (60"x48")	EXTRUDED ALUMINUM SEE DWG. SS-27 FOR E-ZPASS AND ONLY LOGO DETAILS
OH-3b	SS-15	1	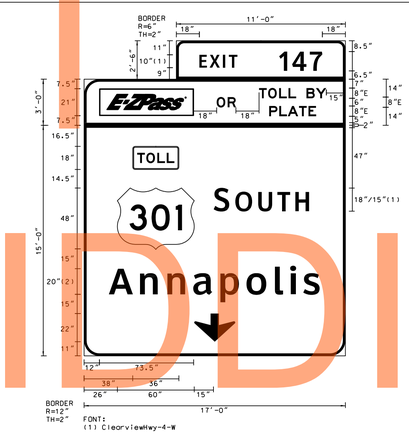	27.5	11'-0"	2'-6"	W	G	2"	6"	---	---	EXTRUDED ALUMINUM
				306	17'-0"	18'-0"	W	G	2"	12"	STD. DOWN ARROW @ 0°	EZ-21, M4-15 (36"x18") M1-4 (60"x48")	EXTRUDED ALUMINUM SEE DWG. SS-27 FOR E-ZPASS AND ONLY LOGO DETAILS
OH-5a	SS-17	1	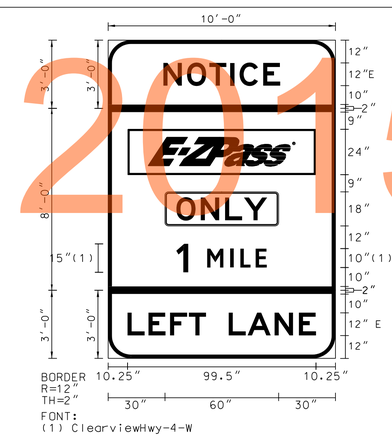	30	10'-0"	3'-0"	BLK	FY	2"	12"	---	---	EXTRUDED ALUMINUM
				80	10'-0"	8'-0"	W	G	2"	---	---	EZ-24, ONLY-18	EXTRUDED ALUMINUM SEE DWG. SS-27 FOR E-ZPASS AND ONLY LOGO DETAILS
				30	10'-0"	3'-0"	BLK	FY	2"	12"	---	---	EXTRUDED ALUMINUM

COLORS: BLK=BLACK, BLU=BLUE, BRO=BROWN, G=GREEN, R=RED, W=WHITE, Y=YELLOW, FY=FLUORESCENT YELLOW, FYG=FLUORESCENT YELLOW GREEN, PUR=PURPLE.

DRAFT
NOT FOR BIDDING
AUGUST 2015

PANEL DESIGNATION	DWG. NO.	QUANTITY	LEGEND	SIZE AREA	SIZE WIDTH	SIZE HEIGHT	COLOR LEGEND	COLOR BCKGRND	BORDER THICKNESS	BORDER RADIUS	ARROW	SHEILD	REMARKS
OH-2a	SS-13	1	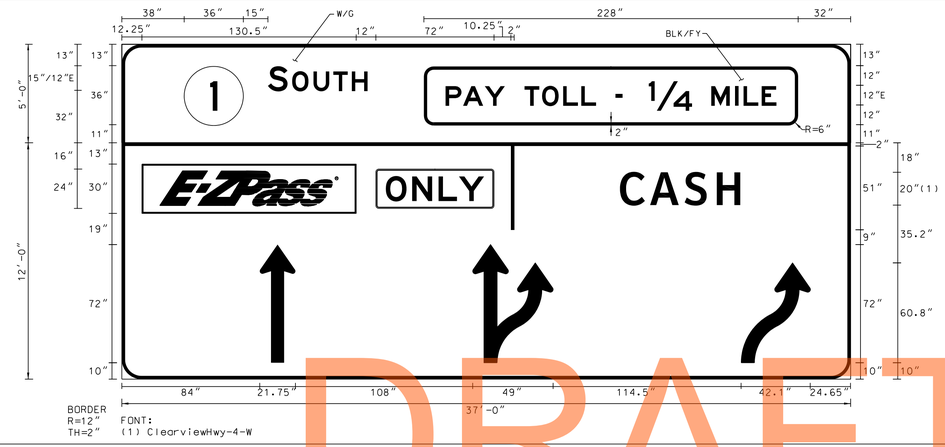	185	37'-0"	5'-0"	SEE LEFT	SEE LEFT	2"	12"	---	M1-5 (36"x36")	EXTRUDED ALUMINUM THE OVERALL HEIGHT OF THE FRACTION SHALL BE 18". THE HEIGHT OF THE FRACTION NUMERALS SHALL BE EQUAL TO THE HEIGHT OF THE ADJACENT TEXT.
				444	37'-0"	12'-0"	W	G	2"	12"	AR-1, AR-2, AR-3	EZ-30, ONLY-24	EXTRUDED ALUMINUM SEE DWG. SS-27 FOR E-ZPASS AND ONLY LOGO DETAILS SEE DWG. SS-27 FOR AR-1, AR-2 AND AR-3 DETAILS
OH-3a	SS-15	1	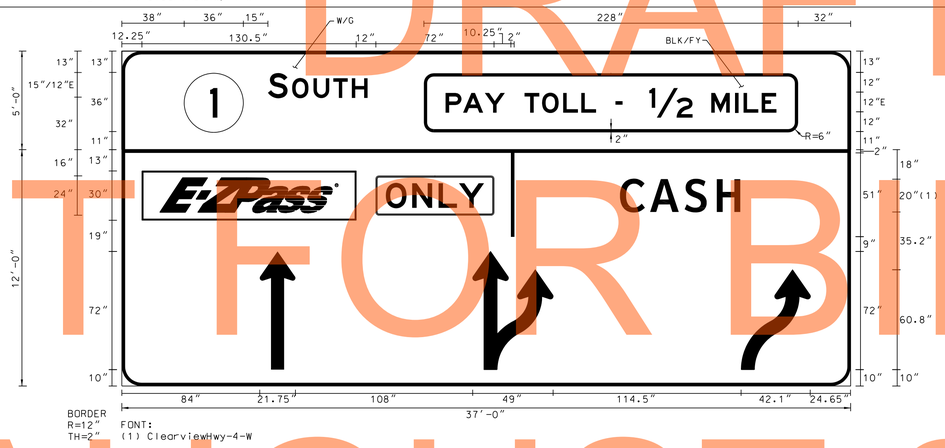	185	37'-0"	5'-0"	SEE LEFT	SEE LEFT	2"	12"	---	M1-5 (36"x36")	EXTRUDED ALUMINUM THE OVERALL HEIGHT OF THE FRACTION SHALL BE 18". THE HEIGHT OF THE FRACTION NUMERALS SHALL BE EQUAL TO THE HEIGHT OF THE ADJACENT TEXT.
				444	37'-0"	12'-0"	W	G	2"	12"	AR-1, AR-2, AR-3	EZ-30, ONLY-24	EXTRUDED ALUMINUM SEE DWG. SS-27 FOR E-ZPASS AND ONLY LOGO DETAILS SEE DWG. SS-27 FOR AR-1, AR-2 AND AR-3 DETAILS
OH-4	SS-16	1	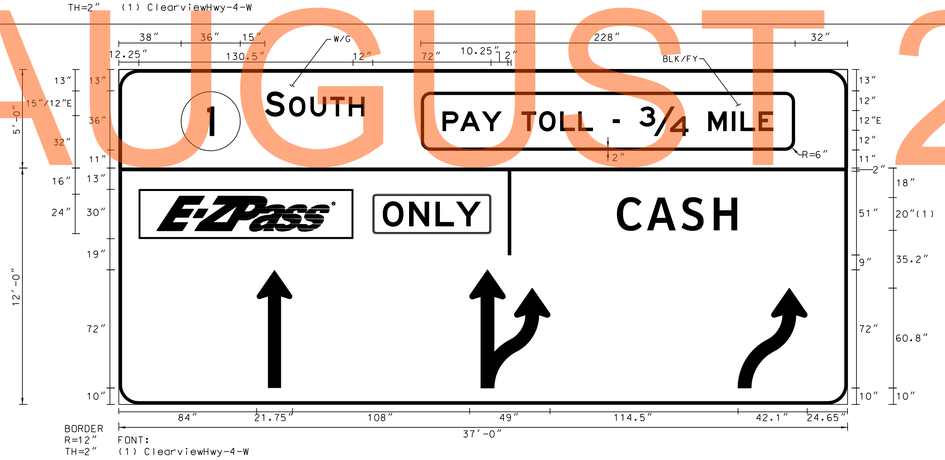	185	37'-0"	5'-0"	SEE LEFT	SEE LEFT	2"	12"	---	M1-5 (36"x36")	EXTRUDED ALUMINUM THE OVERALL HEIGHT OF THE FRACTION SHALL BE 18". THE HEIGHT OF THE FRACTION NUMERALS SHALL BE EQUAL TO THE HEIGHT OF THE ADJACENT TEXT.
				444	37'-0"	12'-0"	W	G	2"	12"	AR-1, AR-2, AR-3	EZ-30, ONLY-24	EXTRUDED ALUMINUM SEE DWG. SS-27 FOR E-ZPASS AND ONLY LOGO DETAILS SEE DWG. SS-27 FOR ARROW DETAILS

COLORS: BLK=BLACK, BLU=BLUE, BRO=BROWN, G=GREEN, R=RED, W=WHITE, Y=YELLOW, FY=FLUORESCENT YELLOW, FYG=FLUORESCENT YELLOW GREEN, PUR=PURPLE.

DRAFT
NOT FOR BIDDING
AUGUST 2015

SS-25

DELAWARE DEPARTMENT OF TRANSPORTATION

ADDENDUMS / REVISIONS

NOT TO SCALE

US 301 & SR 1 INTERCHANGE

CONTRACT T200911302
COUNTY NEW CASTLE
BRIDGE NO.
DESIGNED BY: J.H.R.
CHECKED BY: J.M.M.

GUIDE SIGN DIMENSIONS & DETAILS

SHEET NO. 474
TOTAL SHTS. 491

n:\31653-000\contract lb\cadd\SS025U301_18.dgn 2/4/2013 2:04:50 PM

PANEL DESIGNATION	DWG. NO.	QUANTITY	LEGEND	SIZE AREA (SF)	SIZE WIDTH	SIZE HEIGHT	COLOR LEGEND	COLOR BCKGRND	BORDER THICKNESS	BORDER RADIUS	ARROW	SHEILD	REMARKS
OH-5b	SS-17	1	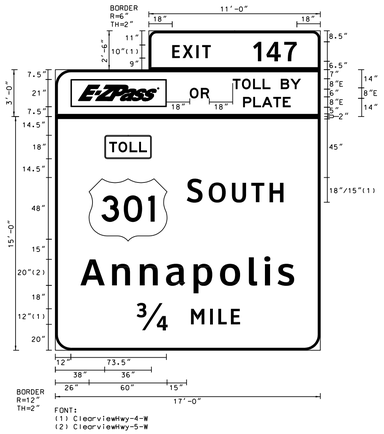	27.5	11'-0"	2'-6"	W	G	2"	6"	---	---	EXTRUDED ALUMINUM
				306	17'-0"	18'-0"	W	G	2"	12"	---	EZ-21, M4-15 (36"x18") M1-4 (60"x48")	EXTRUDED ALUMINUM SEE DWG. SS-27 FOR E-ZPASS AND ONLY LOGO DETAILS. THE OVERALL HEIGHT OF THE FRACTION SHALL BE 21". THE HEIGHT OF THE FRACTION NUMERALS SHALL BE EQUAL TO THE HEIGHT OF THE ADJACENT TEXT.
OH-5c	SS-17	1	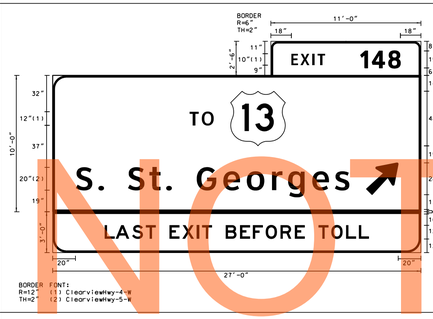	27.5	11'-0"	2'-6"	W	G	2"	6"	---	---	EXTRUDED ALUMINUM
				270	27'-0"	10'-0"	W	G	2"	12"	STD. UP ARROW @ 45°	M1-4 (48"x48")	EXTRUDED ALUMINUM
				81	27'-0"	3'-0"	BLK	FY	2"	12"	---	---	EXTRUDED ALUMINUM
GM-3	SS-12	1	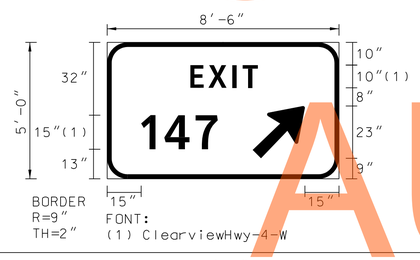	42.5	8'-6"	5'-0"	W	G	2"	9"	STD. UP ARROW @ 45°	---	EXTRUDED ALUMINUM
GM-7	SS-17	1	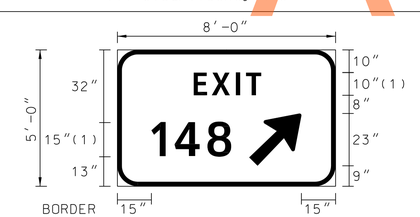	40	8'-0"	5'-0"	W	G	2"	9"	STD. UP ARROW @ 45°	---	EXTRUDED ALUMINUM

PANEL DESIGNATION	DWG. NO.	QUANTITY	LEGEND	SIZE AREA	SIZE WIDTH	SIZE HEIGHT	COLOR LEGEND	COLOR BCKGRND	BORDER THICKNESS	BORDER RADIUS	ARROW	SHEILD	REMARKS
OH-6a	SS-22	1	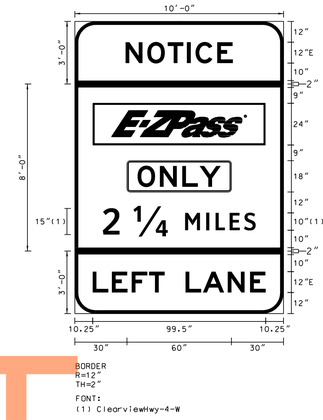	30	10'-0"	3'-0"	BLK	FY	2"	12"	---	---	EXTRUDED ALUMINUM
				80	10'-0"	8'-0"	W	G	2"	---	---	EZ-24, ONLY-18	EXTRUDED ALUMINUM SEE DWG. SS-27 FOR E-ZPASS AND ONLY LOGO DETAILS. THE OVERALL HEIGHT OF THE FRACTION SHALL BE 18". THE HEIGHT OF THE FRACTION NUMERALS SHALL BE EQUAL TO THE HEIGHT OF THE ADJACENT TEXT.
				30	10'-0"	3'-0"	BLK	FY	2"	12"	---	---	EXTRUDED ALUMINUM
OH-6b	SS-22	1	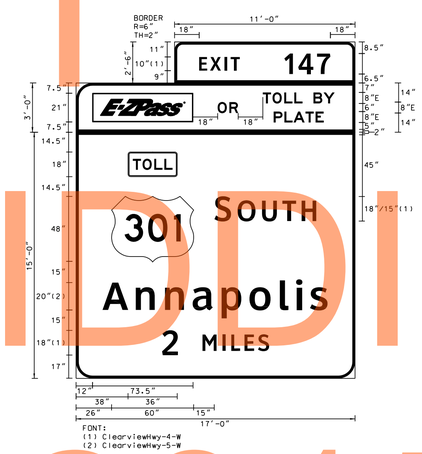	27.5	11'-0"	2'-6"	W	G	2"	6"	---	---	EXTRUDED ALUMINUM
				306	17'-0"	18'-0"	W	G	2"	12"	---	EZ-21, M4-15 (36"x18") M1-4 (60"x48")	EXTRUDED ALUMINUM SEE DWG. SS-27 FOR E-ZPASS AND ONLY LOGO DETAILS.
OH-6c	SS-22	1	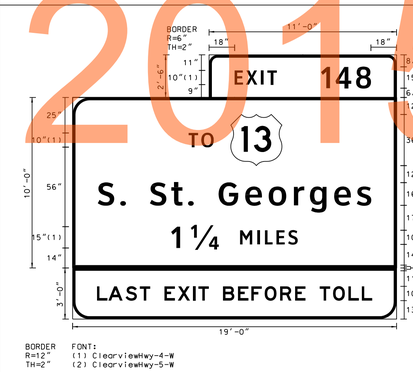	27.5	11'-0"	2'-6"	W	G	2"	6"	---	---	EXTRUDED ALUMINUM
				190	19'-0"	10'-0"	W	G	2"	12"	---	M1-4 (36"x36")	THE OVERALL HEIGHT OF THE FRACTION SHALL BE 18". THE HEIGHT OF THE FRACTION NUMERALS SHALL BE EQUAL TO THE HEIGHT OF THE ADJACENT TEXT.
				57	19'-0"	3'-0"	BLK	FY	2"	12"	---	---	EXTRUDED ALUMINUM

COLORS: BLK=BLACK, BLU=BLUE, BRO=BROWN, G=GREEN, R=RED, W=WHITE, Y=YELLOW, FY=FLUORESCENT YELLOW, FYG=FLUORESCENT YELLOW GREEN, PUR=PURPLE.

DRAFT
NOT FOR BIDDING
AUGUST 2015

PANEL DESIGNATION	DWG. NO.	QUANTITY	LEGEND	SIZE AREA (SF)	SIZE WIDTH	SIZE HEIGHT	COLOR LEGEND	COLOR BCKGRND	BORDER THICKNESS	BORDER RADIUS	ARROW	SHEILD	REMARKS
GM-8	SS-21	1	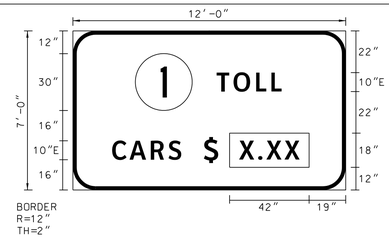	84	12'-0"	7'-0"	BLK	W	2"	12"	---	M1-5 (30"x30")	EXTRUDED ALUMINUM (CONTRACTOR TO RELOCATE EXISTING "TOLL RATE" VMS FROM EXISTING GROUND MOUNTED SIGN). SIGN CUT OUT SHALL MATCH EXISTING SIZE.
GM-9	SS-13	1	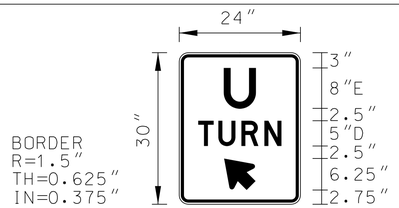	5	24"	30"	BLK	W	.625"	1.5"	STD. ARROW @135°	---	---
ONLY-18	---	---		7.5	60"	18"	BLK	W	5/8"	1.5"	---	---	---
ONLY-24	---	---		12	72"	24"	BLK	W	5/8"	1.5"	---	---	---
EZ-21	---	---		10.7	73.5"	21"	W	PUR	1/2"	---	---	---	---
EZ-24	---	---		16.5	99"	24"	W	PUR	3/4"	---	---	---	---
EZ-30	---	---		27.19	130.5"	30"	W	PUR	3/4"	---	---	---	---

PANEL DESIGNATION	DWG. NO.	QUANTITY	LEGEND	SIZE AREA	SIZE WIDTH	SIZE HEIGHT	COLOR LEGEND	COLOR BCKGRND	BORDER THICKNESS	BORDER RADIUS	ARROW	SHEILD	REMARKS
AR-1	---	---	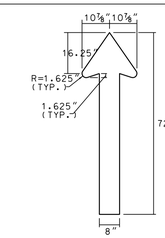	---	---	---	W	---	---	---	---	---	---
AR-2	---	---	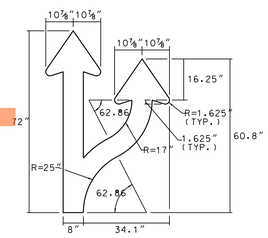	---	---	---	W	---	---	---	---	---	---
AR-3	---	---	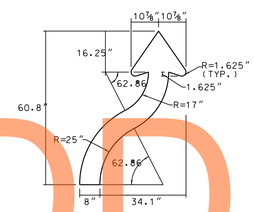	---	---	---	W	---	---	---	---	---	---

COLORS: BLK=BLACK, BLU=BLUE, BRO=BROWN, G=GREEN, R=RED, W=WHITE, Y=YELLOW, FY=FLUORESCENT YELLOW, FYG=FLUORESCENT YELLOW GREEN, PUR=PURPLE.

DRAFT
NOT FOR BIDDING
AUGUST 2015

GUIDE SIGN STEEL SUPPORT CHART

SIGN NO.	SIGN SIZE (WXH)	SHEET NO.	POST SIZE	SUPPORT L-1	SUPPORT L-2	SUPPORT L-3	LATERAL CLEARANCE		SUPPPORT SPACING FROM LEFT EDGE OF SIGN
							OFFSET	OBJECT••	
GM-1	18' x 5.5'	SS-12	W8x18	15.0'	15.0'	-	9.5'	ES	3.6'-10.8'-3.6'
GM-2	13' x 9'	SS-09	W8x18	18.0'	19.0'	-	6.0'	B	2.5'-8.0'-2.5'
GM-3	8.5' x 5'	SS-12	W6x9	13.0'	13.0'	-	2.5'/2.5'	CG (ES/ES)	.5'-7.5'-.5'
GM-7	8' x 5'	SS-17	W6x9	13.0'	13.0'	-	12.1'/12.1'	CG (ES/ES)	1.6'-4.8'-1.6'
GM-8	12' x 7'	SS-21	W8x21	16.0'	20.0'	-	6.0'	W	2.0'-8.0'-2.0'

NOTES:

1. WHEN SPACING BETWEEN STEEL BEAM SUPPORTS IS GREATER THAN 8'-0" INSTALL DOUBLE ALUMINUM ANGLES (2½" x3½" x¼") FROM TOP TO BOTTOM OF SIGN WITH POST CLIPS INSTALLED AT EACH EXTRUDED ALUMINUM PANEL. COST TO FURNISH AND INSTALL ALUMINUM ANGLES SHALL BE INCIDENTAL TO THE INSTALLATION OF SIGNS ON GROUND MOUNT POSTS ITEM.
2. A MINIMUM 7'-0" FROM INSIDE OF FLANGE TO INSIDE OF FLANGE SHALL BE MAINTAINED BETWEEN ALL STEEL BEAM SIGN SUPPORTS LARGER THAN W6X9.
3. ALL STEEL BEAM SIGN SUPPORTS SHALL BE MOUNTED ON BREAKAWAY BASES REGARDLESS OF WHETHER PROTECTED BY TRAFFIC BARRIER OR UNPROTECTED. BREAKAWAY BASE SUPPORT SYSTEMS SHALL BE TRANSPO INDUSTRIES OR APPROVED EQUAL.
4. STEEL SUPPORTS DESIGNED FOR 90 MPH WIND SPEED AND 25 YEAR DESIGN LIFE USING ASTM A709, GRADE 36 STEEL BEAM SUPPORTS.

FOUNDATION SELECTION MATRIX

POST SIZE	FOUNDATION DIAMETER	ROADWAY CUT / FILL SLOPE										
		≥2:1	3:1	4:1	5:1	6:1	7:1	8:1	9:1	10:1	12:1	≤13:1
W6x9	30"	•	C	C	C	C	B	B	B	A	A	A
W6x12 or TS 5"X5"X¼"	30"	•	C	C	C	C	B	B	B	A	A	A
W6x15, W6x16 or TS 6"X6"X 1/4 "	30"	•	C	C	C	C	B	B	B	A	A	A
W8x18	30"	•	C	C	C	C	B	B	B	A	A	A
W8x21 or TS 7"X7"X¼"	30"	•	C	C	C	C	B	B	B	A	A	A
W10x22 or TS 8"X8"X⅜"	36"	•	•	C	C	C	C	B	B	B	A	A
W10x26	36"	•	•	C	C	C	C	B	B	B	A	A
W12x26	36"	•	•	C	C	C	C	B	B	B	A	A
W14x30	36"	•	•	C	C	C	C	B	B	B	A	A
W16x31	36"	•	•	C	C	C	C	B	B	B	A	A
W18x35 or W18x40	36"	•	•	C	C	C	C	B	B	B	A	A
W21x44	42"	•	•	C	C	C	C	B	B	B	B	A

•IF A FOUNDATION EXCEEDS THE 4" AASHTO CRITERIA, THE CONTRACTOR SHALL CONTACT THE ENGINEER FOR APPROPRIATE GUIDANCE.

SIGN STAKEOUT DIMENSIONS

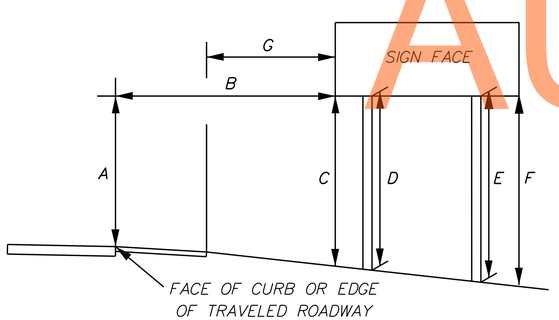

NOTE: CONTRACTOR SHALL COMPLETE SIGN STAKEOUT AND DETERMINE EXACT STEEL SIGN SUPPORT LENGTHS. STAKEOUT DIMENSIONS AND STEEL SIGN SUPPORT LENGTHS SHALL BE SUBMITTED TO ENGINEER FOR APPROVAL PRIOR TO FABRICATION OF STEEL SIGN SUPPORTS.

SIGN CLEARANCE

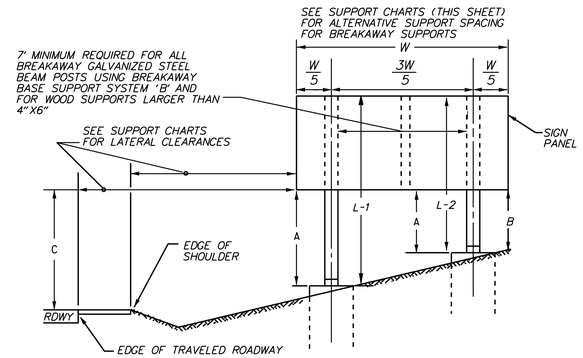

VERTICAL CLEARANCE OF SIGNS

A. 7'-6" MINIMUM FOR BREAKAWAY SUPPORTS OR 7'-0" FOR NON-BREAKAWAY SUPPORTS.
B. 2'-6" MINIMUM
C. 7'-6" MINIMUM & PREFERABLE. THIS DIMENSION IS TO BE INCREASED ONLY WHEN REQUIRED TO MEET A = 7'-6" FOR BREAKAWAY OR A (MIN.) = 7'-0" FOR NON-BREAKAWAY AND B (MIN) 2'-0".

ALL DIMENSIONS ARE TO BOTTOM OF SIGN

••TOTAL WEIGHT BELOW THE HINGES SHOULD BE LESS THAN 600 POUNDS

LATERAL CLEARANCE

SEE SUPPORT CHARTS

•••OBJECT CODES

W = FACE OF W-BEAM TRAFFIC BARRIER
FOC = FACE OF CURB
ES = EDGE OF SHOULDER
ETR = EDGE OF TRAVELED ROADWAY
CM = CENTERED IN MEDIAN (LEFT OBJECT/ RIGHT OBJECT)
CG = CENTERED IN GORE (LEFT OBJECT/ RIGHT OBJECT)
B = FACE OF CONCRETE TRAFFIC BARRIER

STANDARD SIGN VERTICAL AND LATERAL CLEARANCE DETAIL

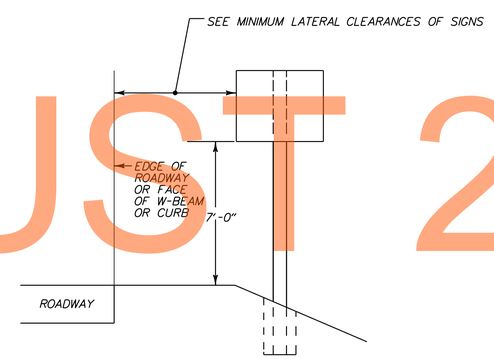

MINIMUM LATERAL CLEARANCE OF SIGNS:

1 = EDGE OF SIGN 6' FROM FACE OF W-BEAM TRAFFIC BARRIER
2 = EDGE OF SIGN 6' FROM EDGE OF SHOULDER
3 = EDGE OF SIGN 6' PREFERABLE MIN. (2' ABSOLUTE MIN.) FROM EACH EDGE OF SHOULDER IN MEDIAN OR CURB

NOTE: ALL SUPPORTS WITHIN THE CLEAR ZONE SHALL BE BREAKAWAY UNLESS PROTECTED BY TRAFFIC BARRIER, EXCEPT AS NOTED ABOVE FOR STEEL SUPPORTS.

GALVANIZED STEEL BEAM TYPE A SIGN POST FOUNDATION DETAIL

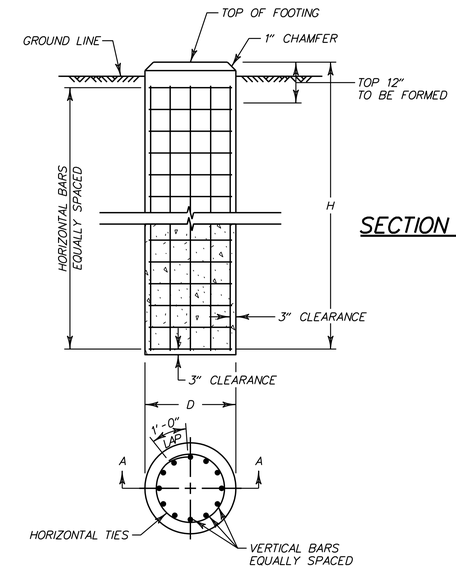

SECTION A-A

PLAN VIEW

FOUNDATION DATA TABLE

POST SIZE	D	H	VERTICAL REINFORCEMENT	HORIZONTAL REINFORCEMENT	CONCRETE REQUIRED (CY)
W6x9	30"	6'-0"	EIGHT (8)-NO. 7	SEVEN (7)-NO. 4	1.1
W6x12 OR TS-5x5x1/4	30"	6'-0"	EIGHT (8)-NO. 7	SEVEN (7)-NO. 4	1.1
W6x15, W6x16 OR TS-6x6x1/4	30"	6'-6"	EIGHT (8)-NO. 7	SEVEN (7)-NO. 4	1.2
W8x18	30"	7'-6"	EIGHT (8)-NO. 9	EIGHT (8)-NO. 4	1.4
W8x21 OR TS-7x7x1/4	30"	8'-0"	EIGHT (8)-NO. 9	NINE (9)-NO. 4	1.5
W10x22 OR TS-8x8x5/16	36"	8'-6"	EIGHT (8)-NO. 10	NINE (9)-NO. 4	2.3
W10x26	36"	9'-0"	EIGHT (8)-NO. 10	TEN (10)-NO. 4	2.4
W12x26	36"	10'-0"	EIGHT (8)-NO. 10	ELEVEN (11)-NO. 4	2.7
W14x30	36"	11'-0"	EIGHT (8)-NO. 10	TWELVE (12)-NO. 4	2.9
W16x31	36"	12'-0"	EIGHT (8)-NO. 10	THIRTEEN (13)-NO. 4	3.2
W18x35 OR W18x40	36"	13'-0"	EIGHT (8)-NO. 10	FOURTEEN (14)-NO. 4	3.5
W21x44	42"	12'-0"	TWELVE (12)-NO. 10	THIRTEEN (13)-NO. 4	4.3

STEEL POST BREAKAWAY SYSTEM SELECTION CHART

SYSTEM TYPE	ASSOCIATED POST SIZE
AI6	W6X9
B525	W6X12, W6X15, W6x16, W8X18, W8X21, 5"x5" & 6"x6" SQUARE
B650	7"x7" AND 8"X8" SQUARE AND ALL I-BEAMS LARGER THAN W8X21

DRAFT
NOT FOR BIDDING
AUGUST 2015

GALVANIZED STEEL BEAM TYPE B SIGN POST FOUNDATION DETAIL

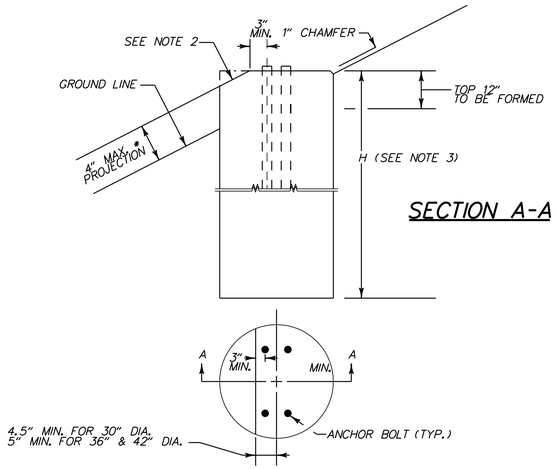

NOTES:

1. THIS FOUNDATION SHALL BE USED ONLY IN LOCATIONS MEETING SLOPE CRITERIA IN ACCORDANCE WITH THE STEEL BREAKAWAY SUPPORT FOUNDATION SELECTION MATRIX ON SIGNING CONSTRUCTION DETAILS SHEET.
2. SLOPED PORTIONS OF THE FOUNDATION SHALL MATCH THE FINISHED GROUND SLOPE.
3. REFER TO GALVANIZED STEEL BEAM TYPE A SIGN POST FOUNDATION DETAIL FOR FOUNDATION DIMENSIONS AND REINFORCING STEEL DETAILS.

GALVANIZED STEEL BEAM TYPE C SIGN POST FOUNDATION DETAIL

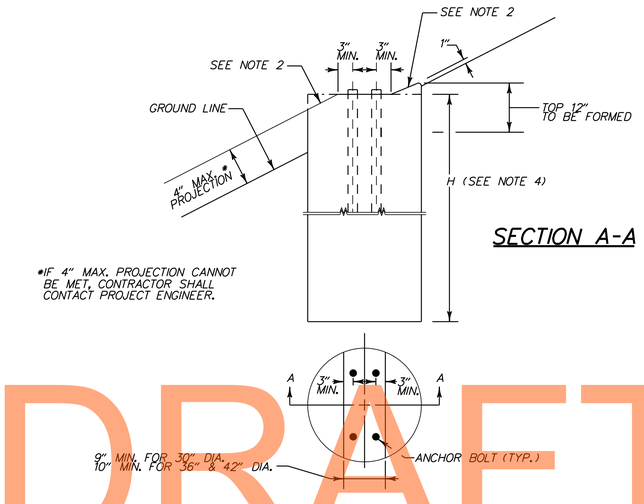

NOTES:

1. THIS FOUNDATION SHALL BE USED ONLY IN LOCATIONS MEETING SLOPE CRITERIA IN ACCORDANCE WITH THE STEEL BREAKAWAY SUPPORT FOUNDATION SELECTION MATRIX ON THE SIGNING CONSTRUCTION DETAILS SHEET.
2. SLOPED PORTIONS OF THE FOUNDATION SHALL MATCH THE FINISHED GROUND SLOPE.
3. ON FILL SLOPES GREATER THAN 6:1 BUT NO STEEPER THAN 3:1, FOUNDATIONS DESIRABLY SHOULD BE INSTALLED A MINIMUM OF 14 FT BEYOND THE HINGE POINT. THE HINGE POINT IS THE POINT OF SLOPE TRANSITION FROM THE SHOULDER SLOPE, OR A RELATIVELY FLAT RECOVERY AREA ADJACENT TO THE ROADWAY, TO A STEEPER FORESLOPE, (ALSO KNOWN AS THE FORESLOPE BREAK).
4. REFER TO GALVANIZED STEEL BEAM TYPE A SIGN POST FOUNDATION DETAIL FOR FOUNDATION DIMENSIONS AND REINFORCING STEEL DETAILS.

OVERHEAD SIGN SUPPORT DETAIL FOR NEW SIGN STRUCTURES

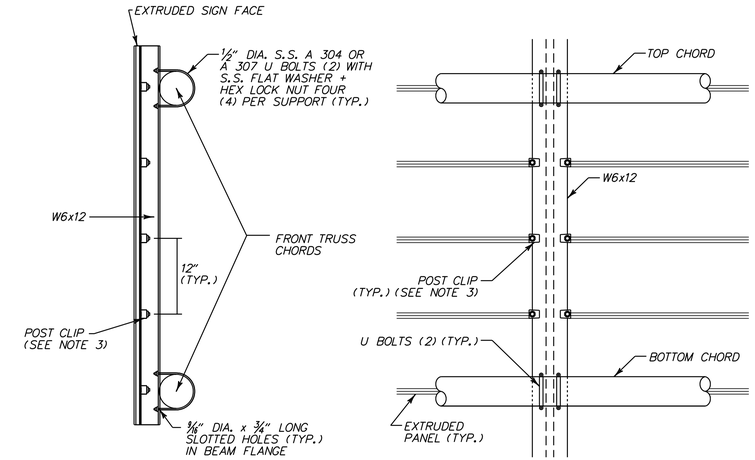

NOTES:

1. ALL STEEL SHALL BE HOT DIPPED GALVANIZED.
2. ALL W-BEAMS SHALL CONFORM TO A 709, GRADE 36.
3. POST CLIPS SHALL BE INSTALLED ON EACH SIDE OF SIGN SUPPORT SPACED EVERY 12" FOR ENTIRE HEIGHT OF SIGN, AS SHOWN. POST CLIPS SHALL MEET AASHTO STANDARD SPECIFICATIONS FOR STRUCTURAL SUPPORTS FOR HIGHWAY SIGNS, LUMINAIRES AND TRAFFIC SIGNALS.

BREAKAWAY POLES ADJUSTMENT FOR GROUND SLOPES DETAIL

TO AVOID UNDERCARRIAGE SNAGGING ON CONVEX GROUND PROFILES, THE TOP OF THE FOOTING SHALL NOT PROJECT MORE THAN 4" ABOVE ANY 60" CHORD ALIGNED PERPENDICULARLY TO THE EDGE OF THE ROADWAY BETWEEN A POINT ON THE GROUND SURFACE ON ONE SIDE OF THE SUPPORT TO A POINT ON THE GROUND SURFACE ON THE OTHER SIDE OF THE SUPPORT.

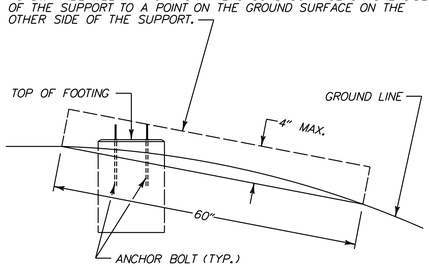

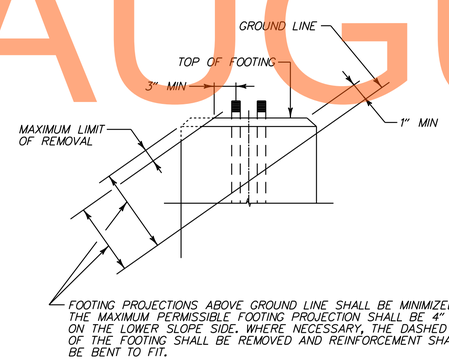

VERTICAL SUPPORT ATTACHMENT FOR GROUND MOUNTED SIGNS

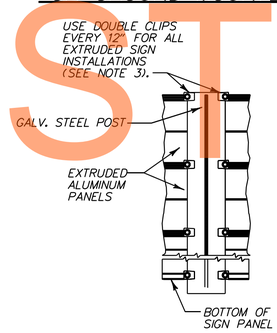

NOTES:

1. ALL STEEL SHALL BE HOT DIPPED GALVANIZED.
2. ALL STEEL SUPPORTS SHALL CONFORM TO A 709, GRADE 36.
3. POST CLIPS SHALL BE INSTALLED ON EACH SIDE OF SIGN SUPPORT SPACED EVERY 12" FOR ENTIRE HEIGHT OF SIGN, AS SHOWN. POST CLIPS SHALL MEET AASHTO STANDARD SPECIFICATIONS FOR STRUCTURAL SUPPORTS FOR HIGHWAY SIGNS, LUMINAIRES AND TRAFFIC SIGNALS.

INSTALLATION OF EXIT PANEL TO EXTRUDED SIGN

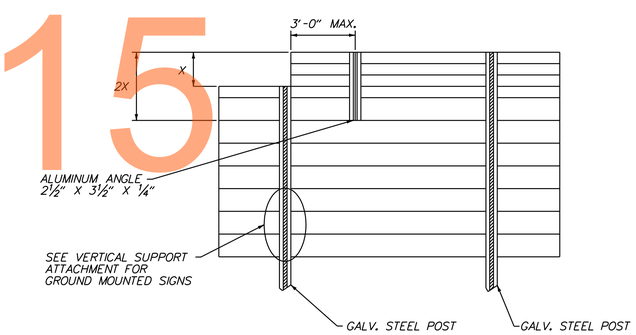

NOTES:

1. VERTICAL SUPPORTS ARE TO BE CONTINUOUS FOR ENTIRE HEIGHT OF SIGN, INCLUDING EXIT PANEL WHERE APPLICABLE.
2. ALL SUPPORTS (INCLUDING ANGLES) SHALL BE POST CLIPPED AT 12" INTERVALS.

DRAFT
NOT FOR BIDDING
AUGUST 2015

n:\3653-000\contract_tb\cadd\SS029U301_18.dgn
2/4/2013 2:04:15 PM

DELAWARE DEPARTMENT OF TRANSPORTATION	ADDENDUMS / REVISIONS	NOT TO SCALE	US 301 & SR 1 INTERCHANGE	CONTRACT T200911302	BRIDGE NO.	SIGNING CONSTRUCTION DETAILS
				COUNTY NEW CASTLE	DESIGNED BY: J.H.R.	
					CHECKED BY: J.M.M.	

SS-29

SHEET NO.	TOTAL SHTS.
478	491

SIGN STRUCTURE NOTES:

1. SIGN STRUCTURE STANDARDS ARE IN ACCORDANCE WITH AASHTO "STANDARD SPECIFICATIONS FOR STRUCTURAL SUPPORTS FOR HIGHWAY SIGNS, LUMINAIRES AND TRAFFIC SIGNALS, 2009". ALL STRUCTURAL DETAILS HAVE BEEN ANALYZED AGAINST FATIGUE CATEGORY 1 IMPORTANCE FACTOR AS DESIGNATED IN THE ABOVE AASHTO SPECIFICATIONS.
2. ALL STRUCTURAL MAIN TUBES SHALL CONFORM TO AMERICAN PETROLEUM INSTITUTE SPECIFICATION 5L-X52.
3. ALL OTHER TUBES SHALL HAVE MIN. 35 KSI YIELD STRENGTH AND CONFORM TO A 501. A SUBSTITUTION USING A53, GRADE B MAY BE USED ON A CASE-BY-CASE BASIS, AS APPROVED BY THE ENGINEER.
4. ALL STEEL PLATES, W-BEAMS AND MISCELLANEOUS SHAPES SHALL CONFORM TO A 709, GRADE 36.
5. ALL PIPE FOR HANDRAIL TO BE ASTM A 500 GRADE 'A'.
6. ALL GRATING TO BE 1½" THICK GALVANIZED AND ABLE TO WITHSTAND 100 LBS./SQ.FT. LIVE LOAD.
7. ALL RAIL SHALL BE DESIGNED TO CARRY ONE 500 LBS. CONCENTRATED LOAD, PLACED ANYWHERE ALONG TOP OF RAILING.
8. ALL SIGN STRUCTURES HAVE BEEN DESIGNED FOR AN ADDITIONAL 15% OF THE PROPOSED SIGN AREA. ADDITIONAL AREA FOR AN EXIT PANEL (12'x 3' HIGH = 36 SQ. FT.) HAS BEEN INCLUDED FOR DESIGN OF ALL STRUCTURAL MEMBERS.
9. ALL STRUCTURES HAVE BEEN DESIGNED FOR STANDARD ALUMINUM EXTRUDED SIGN PANELS. ONLY SIGN STRUCTURE DMS-1 HAS BEEN DESIGNED FOR DYNAMIC MESSAGE SIGNS.
10. A DESIGN SIGN AREA HAS BEEN INCLUDED FOR SIGN STRUCTURE DMS-1 SINCE THE DMS AREA IS SMALL RELATIVE TO POTENTIAL STATIC SIGN SIZE AND MAY NOT PROVIDE SUFFICIENT CAPACITY AND VERTICAL CLEARANCE FOR FUTURE STATIC SIGN REPLACEMENT.
11. ALL SIGN STRUCTURE SUPPORTS SHALL BE LOCATED BEHIND PHYSICAL TRAFFIC BARRIERS.
12. MODIFICATIONS TO ANY TRUSSING-CHORD GUSSET PLATE CONNECTION IN ORDER TO ACCOMMODATE SIGN PANEL SUPPORTS SHALL NOT BE PERMITTED.
13. ALL MATERIALS AND WORKMANSHIP SHALL CONFORM TO THE STANDARDS OF THE AMERICAN SOCIETY FOR TESTING MATERIALS (ASTM) AND STANDARDS OF THE AMERICAN NATIONAL STANDARDS INSTITUTE (ANSI).
14. ALL WELDING SHALL BE IN ACCORDANCE WITH AASHTO AMERICAN WELDING SOCIETY (AWS) D1.5 BRIDGE WELDING CODE. WELDING NOT COVERED IN AWS D1.5 SHALL CONFORM TO AWS D1.1 STRUCTURAL WELDING CODE.
15. GALVANIZING SHALL CONFORM TO ASTM A123 OR ASTM A153 AND ASTM A143, ASTM A385.
16. GALVANIZED HIGH STRENGTH BOLTS SHALL CONFORM TO AASHTO M164/ASTM A325.
17. GALVANIZED HEAT TREATED NUTS SHALL CONFORM TO AASHTO M292/ASTM A194 OR AASHTO M291/ASTM A563 GRADE 2H, DH. GALVANIZED HARDENED STEEL WASHERS SHALL CONFORM TO AASHTO M293/ASTM F436.
18. GALVANIZED ANCHOR BOLTS, NUTS AND WASHERS SHALL CONFORM TO ASTM F1554 GRADE 55.
19. ALL ANCHOR BOLTS SHALL BE PLUMB AFTER FOUNDATION INSTALLATION. STEEL TEMPLATES SHALL BE USED TO SET ANCHOR BOLTS PLUMB WHEN POURING THE FOUNDATION.
20. USE LOCK NUTS AND FLAT WASHERS FOR ALL "U" BOLTS (A307 OR EQUIVALENT).
21. BASE PLATE SHALL BE IN FULL CONTACT WITH ALL FLAT WASHERS.
22. ALL ANCHOR BOLT NUTS SHALL BE TIGHTENED USING TURN OF NUT METHOD. (30° MIN TO 45° MAX TURN AFTER SNUG TIGHT).
23. GROUT SHALL NOT BE PLACED BETWEEN THE BASE PLATE AND CONCRETE TOP.
24. USE CLASS B CEMENT CONCRETE f'c=3000 PSI IN PEDESTALS AND FOOTINGS.

INDEX OF DRAWINGS

SHEET NUMBER	DRAWING NUMBER	TITLE
486	SS-30	SIGN STRUCTURE NOTES AND QUANTITIES
487	SS-31	SIGN STRUCTURE ELEVATION-1
488	SS-32	SIGN STRUCTURE ELEVATION-2
489	SS-33	SIGN STRUCTURE SCHEDULE
490	SS-34	TOWER DETAILS
491	SS-35	TRUSS DETAILS
492	SS-36	DMS WALKWAY DETAILS
493	SS-37	FOUNDATION DETAILS

QUANTITIES

ITEM NO.	ITEM TITLE	UNIT	QUANTITY
605523	BOX TRUSS TYPE OVERHEAD SIGN SUPPORT AND FOUNDATION	L.S.	1

DRAFT
NOT FOR BIDDING
AUGUST 2015

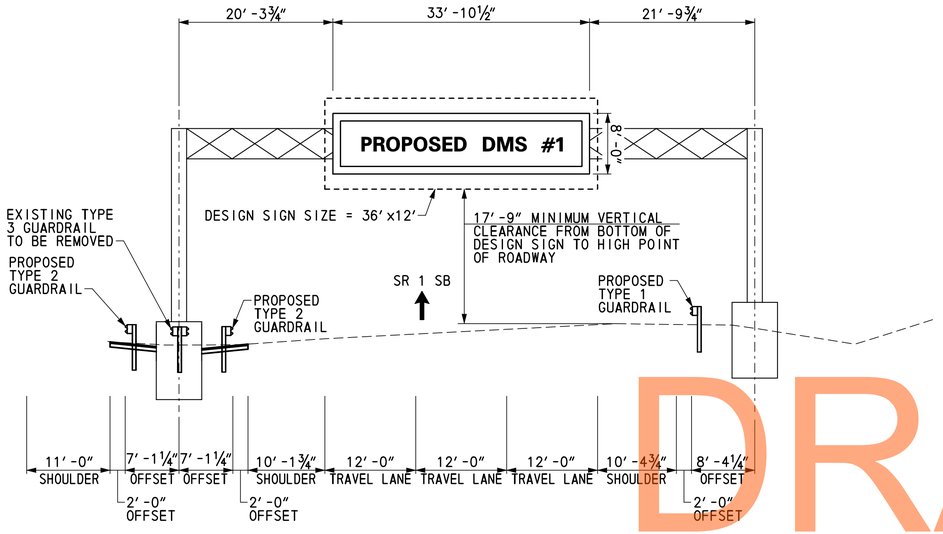

DMS-1 (76′-0″ SPAN LENGTH)
SR 1 SOUTHBOUND
STATION 180+69, LEFT
(SEE PLAN SHEET SS-23)

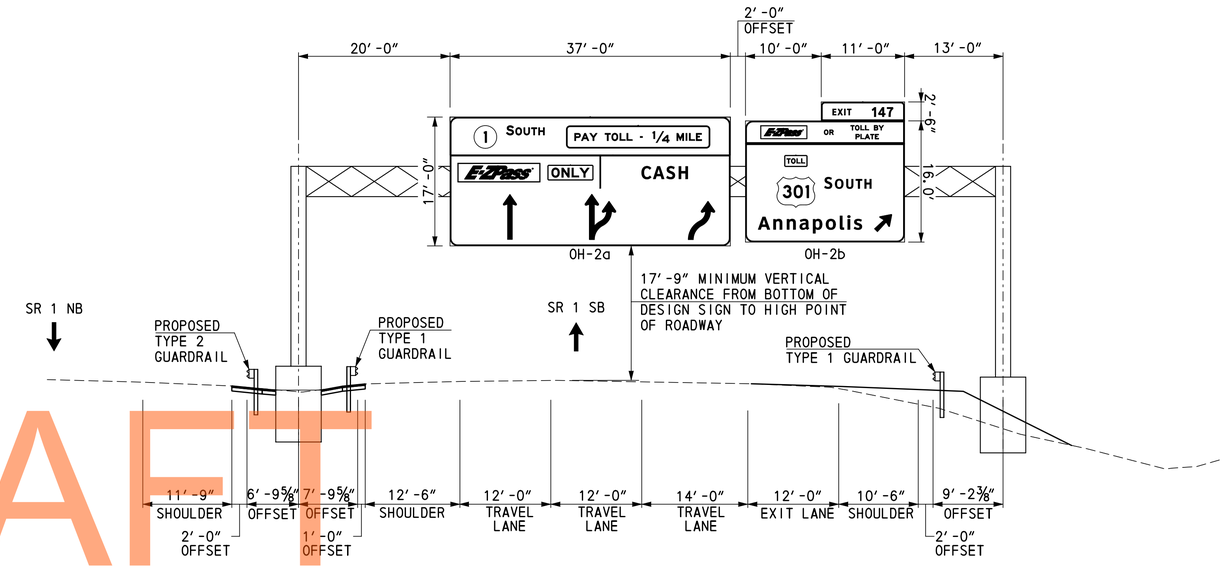

OH-2 (93′-0″ SPAN LENGTH)
SR 1 SOUTHBOUND
STATION 1806+55, LEFT
(SEE PLAN SHEET SS-13)

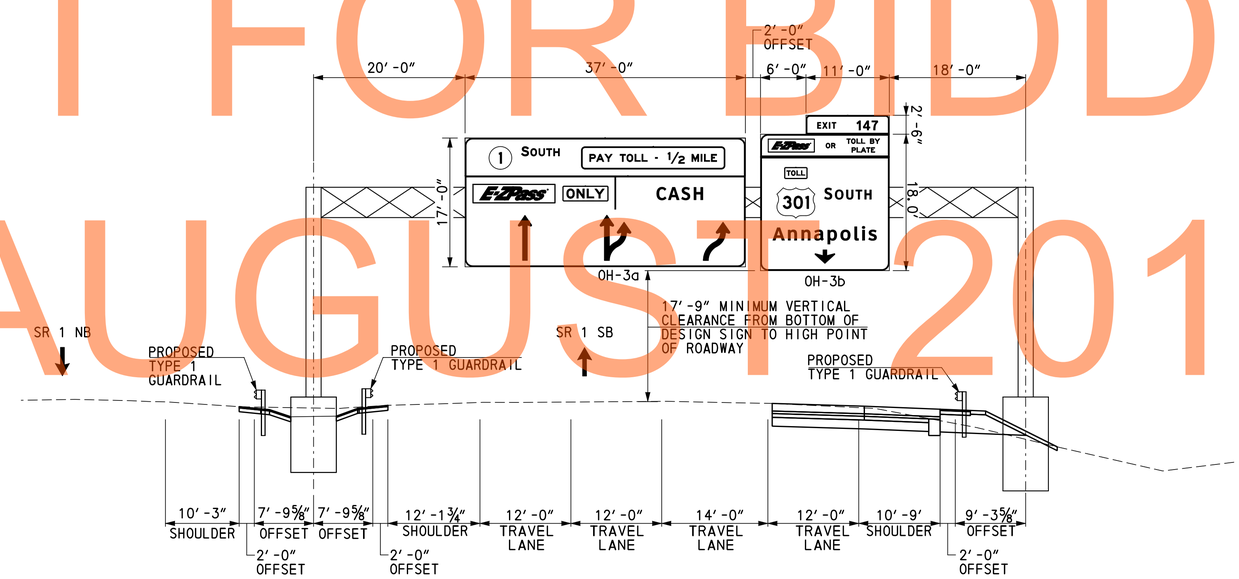

OH-3 (94′-0″ SPAN LENGTH)
SR 1 SOUTHBOUND
STATION 1820+50, LEFT
(SEE PLAN SHEET SS-15)

DRAFT
NOT FOR BIDDING
AUGUST 2015

$DGNNAME$
$$DATE$$ 1:17:41 PM

DELAWARE DEPARTMENT OF TRANSPORTATION	ADDENDUMS / REVISIONS	NOT TO SCALE	US 301 & SR 1 INTERCHANGE	CONTRACT T200911302	BRIDGE NO.	SIGN STRUCTURE ELEVATION–1	SS-31
				COUNTY NEW CASTLE	DESIGNED BY: BSW		SHEET NO. 480
					CHECKED BY: BJH		TOTAL SHTS. 491

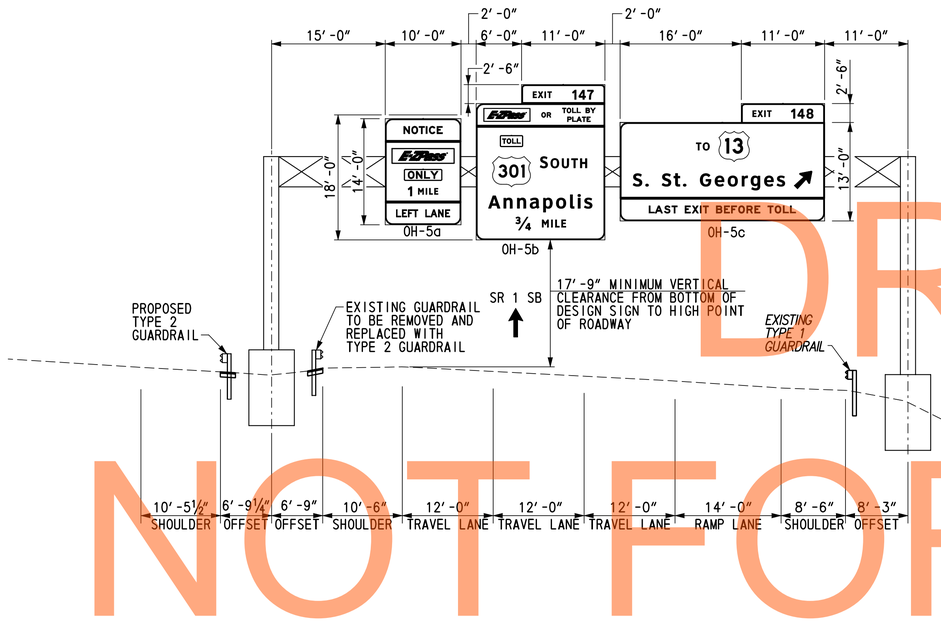

OH-5 (84′-0″ SPAN LENGTH)
SR 1 SOUTHBOUND
STATION 1839+38, LEFT
(SEE DWG. NO. SS-17)

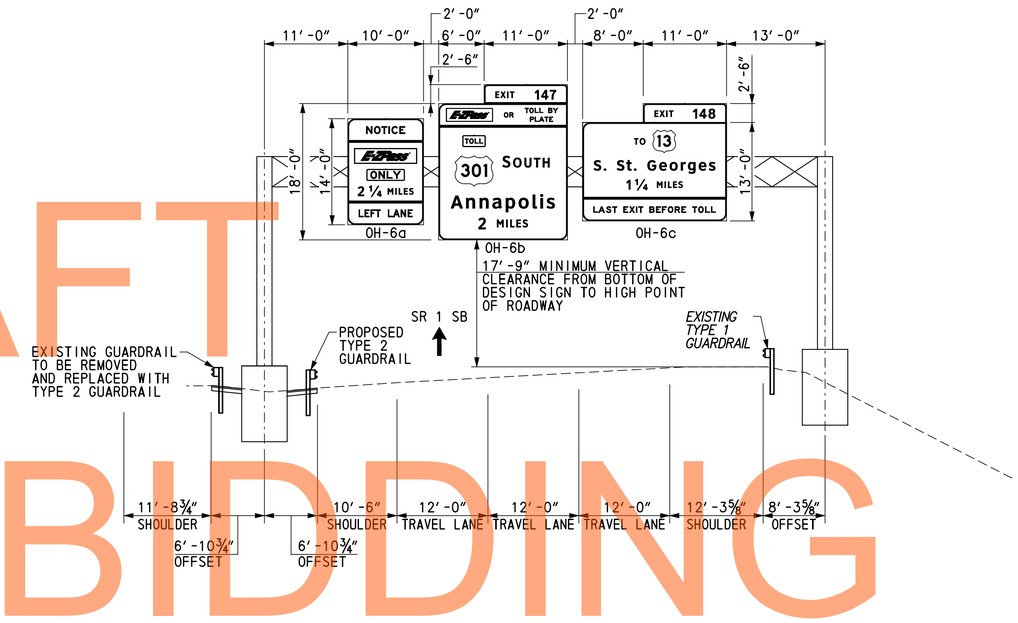

OH-6 (74′-0″ SPAN LENGTH)
SR 1 SOUTHBOUND
STATION 170+95, LEFT
(SEE DWG. NO. SS-22)

DRAFT
NOT FOR BIDDING
AUGUST 2015

SS-32

DELAWARE DEPARTMENT OF TRANSPORTATION	ADDENDUMS / REVISIONS	NOT TO SCALE	US 301 & SR 1 INTERCHANGE	CONTRACT T200911302 / COUNTY NEW CASTLE	BRIDGE NO. / DESIGNED BY: BSW / CHECKED BY: BJH	SIGN STRUCTURE ELEVATION–2

SHEET NO. 481
TOTAL SHTS. 491

$DGNNAME$
$$DATE$$ 1:18:44 PM

STRUCTURE MARK	SPAN LENGTH	ELEVATIONS*			TOWER POLE SIZE	TOWER BRACING TUBE SIZE	TRUSS CHORD TUBE SIZE	TRUSS CHORD BRACING SIZE	DESIGN SIGN	TOTAL CAMBER (△ V)
		℄ TRUSS & SIGN	BOTTOM OF BASE PLATE 1	BOTTOM OF BASE PLATE 2						
DMS-1	76′-0″	66.70	41.46	44.09	20″ O.D. x 0.344″ THK.	6.625″ O.D. x 0.280″ THK.	6.625″ O.D. x 0.250″ THK.	3.500″ O.D. x 0.250 THK.	36′-0″(W)x12′-0″(H)	1 13/16″
OH-2	93′-0″	49.10	24.39	23.11	24″ O.D. x 0.312″ THK.	6.625″ O.D. x 0.280″ THK.	8.625″ O.D. x 0.250″ THK.	3.500″ O.D. x 0.250 THK.	62′-0″(W)x18′-0″(H)	2 9/16″
OH-3	94′-0″	53.31	27.94	27.46	24″ O.D. x 0.312″ THK.	6.625″ O.D. x 0.280″ THK.	8.625″ O.D. x 0.250″ THK.	3.500″ O.D. x 0.250 THK.	62′-0″(W)x18′-0″(H)	2 9/16″
OH-5	84′-0″	109.87	85.70	82.42	20″ O.D. x 0.344″ THK.	6.625″ O.D. x 0.280″ THK.	8.625″ O.D. x 0.250″ THK.	3.500″ O.D. x 0.250 THK.	60′-0″(W)x18′-0″(H)	2 3/16″
OH-6	74′-0″	96.20	69.90	72.08	20″ O.D. x 0.344″ THK.	6.625″ O.D. x 0.280″ THK.	6.625″ O.D. x 0.250″ THK.	3.500″ O.D. x 0.250 THK.	60′-0″(W)x18′-0″(H)	1 5/8″

* SEE ELEVATIONS NOTE

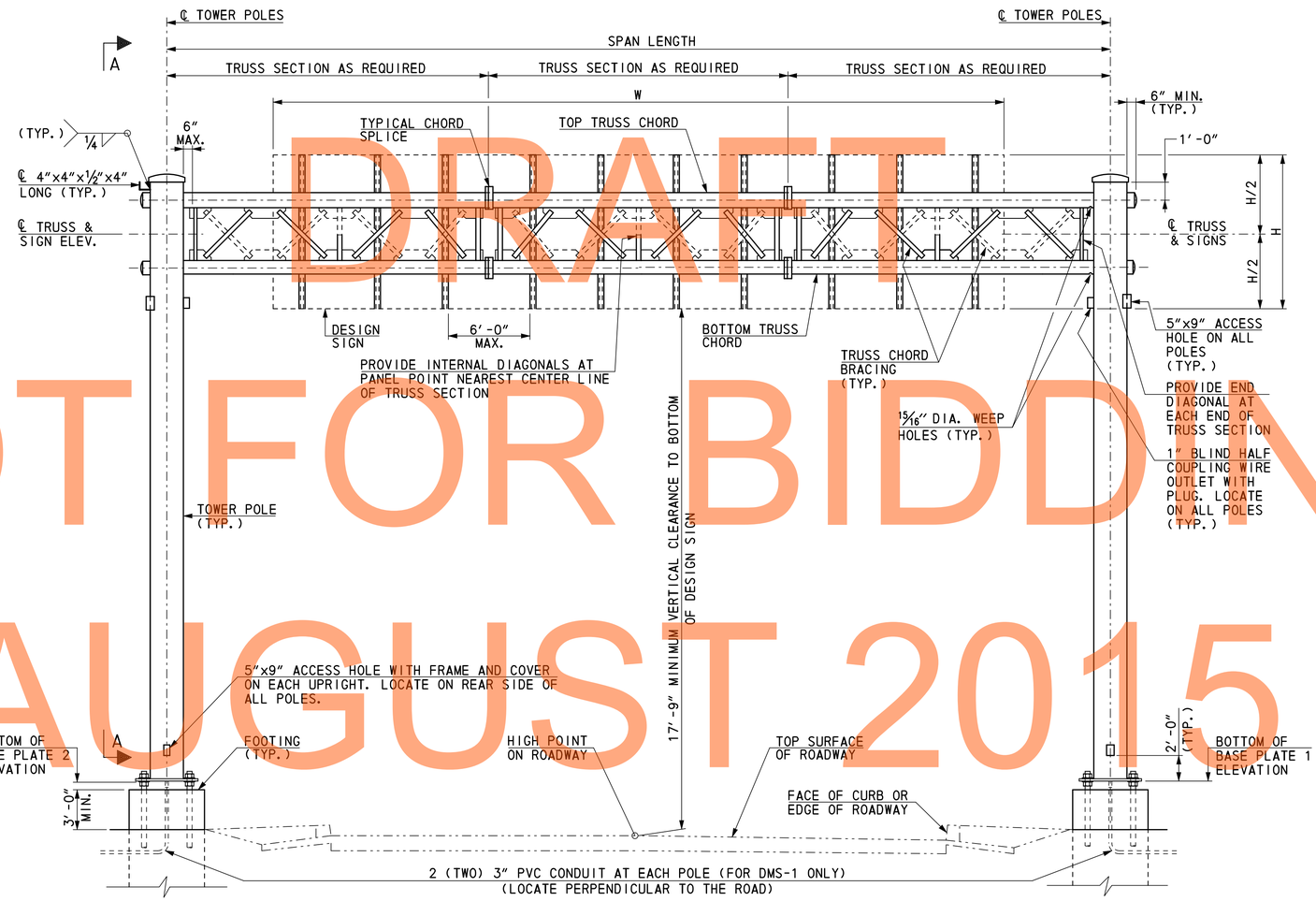

REAR ELEVATION VIEW

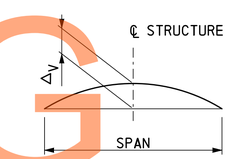

CAMBER DIAGRAM

NOTES:

- ELEVATIONS ARE BASED ON APPROXIMATE GROUND ELEVATION AND APPROXIMATE TOP OF ROAD HIGH POINT ELEVATION. CONTRACTOR SHALL FIELD VERIFY AND ADJUST ELEVATIONS AS DIRECTED BY THE ENGINEER, TO MEET THE MINIMUM REQUIREMENTS INDICATED.
- TWO SPLICES (THREE TRUSS SECTIONS) SHALL BE PROVIDED FOR ALL OVERHEAD STRUCTURES.
- SIGN PANELS SHALL BE CENTERED VERTICALLY ABOUT THE CENTERLINE OF THE TRUSS.
- FOR SECTION A-A, SEE DRAWING SS-36.

DRAFT
NOT FOR BIDDING
AUGUST 2015

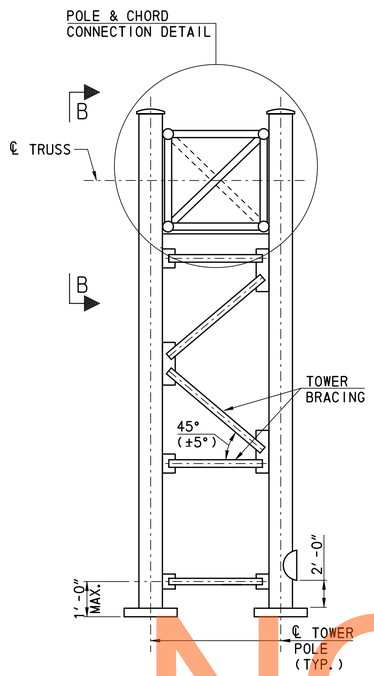

SECTION A-A

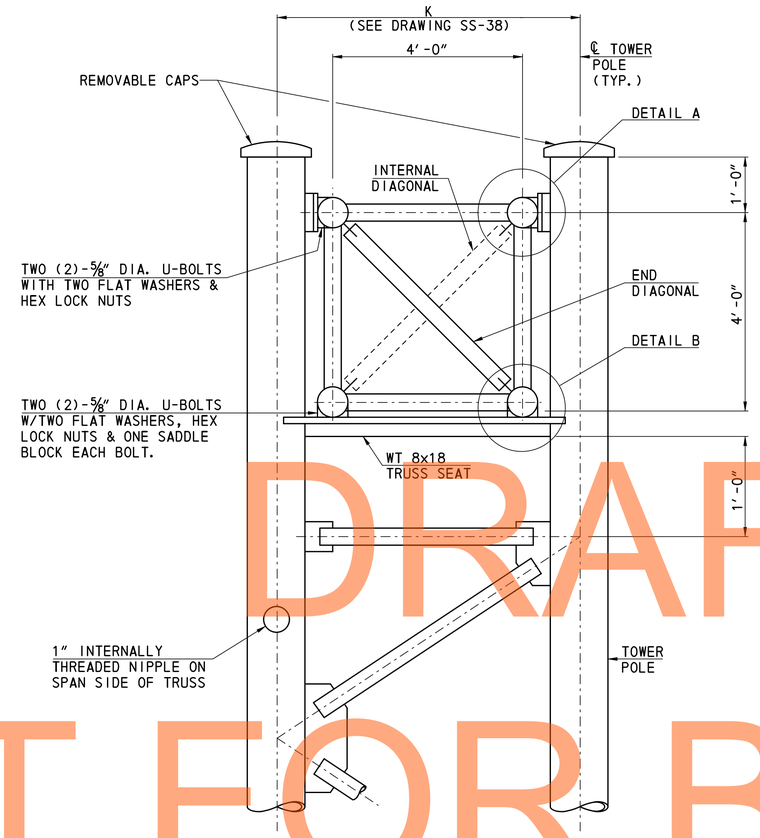

POLE & CHORD CONNECTION DETAIL

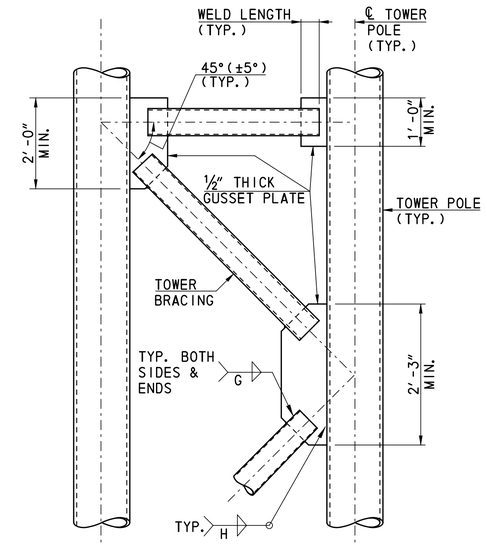

TOWER BRACING DETAIL

GUSSET PLATE AND WELDING SIZE TABLE FOR TOWER BRACING				
BRACING SIZE	GUSSET PLATE THICKNESS	WELD SIZE		MINIMUM WELD LENGTH
		G	H	
6.625" O.D. x 0.280" THK.	⅝"	5/16"	5/16"	6"

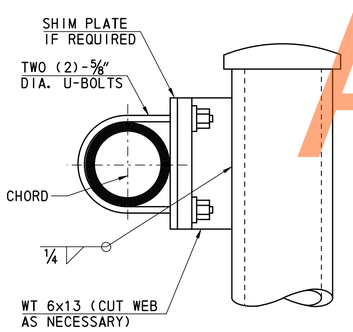

DETAIL A

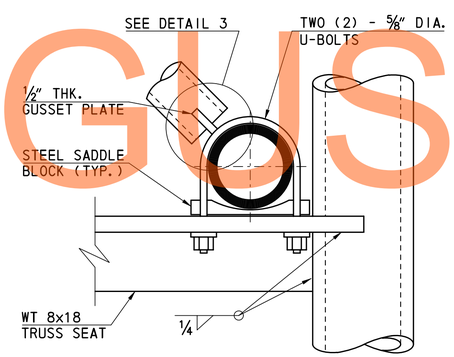

DETAIL B

NOTES:

- FOR LOCATION OF SECTION A-A. SEE DRAWING SS-35.
- FOR SECTION B-B, SEE DRAWING SS-37.
- FOR DETAIL 3, SEE DRAWING SS-37.

DRAFT
NOT FOR BIDDING
AUGUST 2015

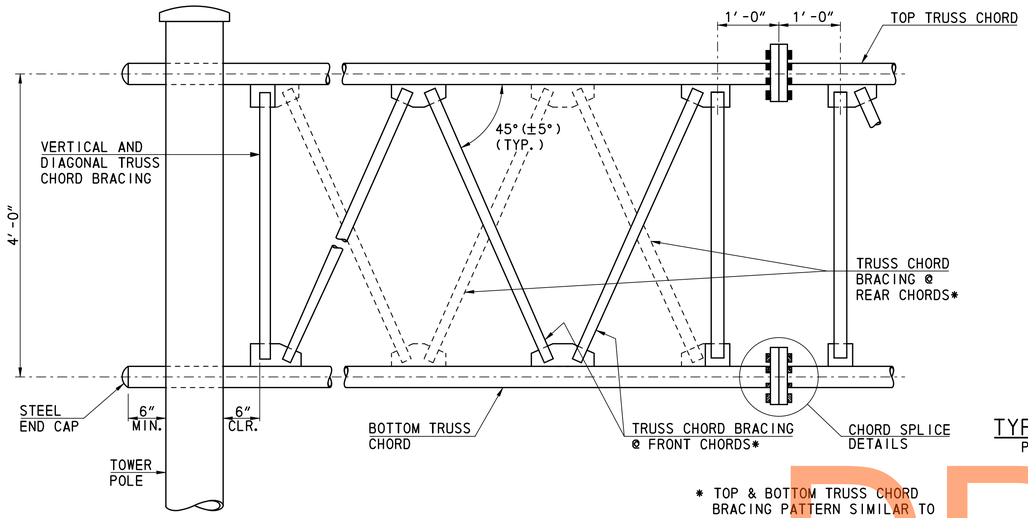

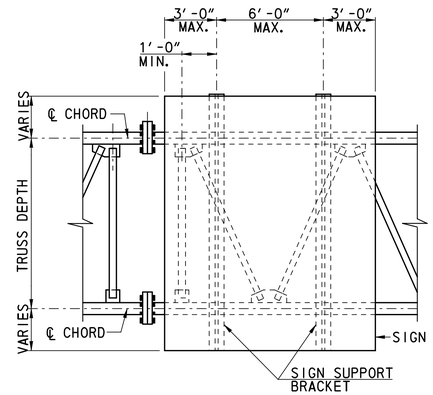

TYPICAL SIGN SUPPORT BRACKET SPACING DIAGRAM

PROVIDE ADDITIONAL BRACKETS AS REQUIRED AT 6'-0" MAXIMUM SPACING

WELDING SIZE TABLE FOR TRUSS CHORD BRACING			
MEMBER SIZE	E	F	MIN. WELD LENGTH
3.500" O.D. x 0.250" THK	5/16"	5/16"	4"

CHORD SPLICE SCHEDULE				
CHORD SIZE	O.D.	B.C.	NO. & SIZE OF BOLTS	CHORD SPLICE PLATE THICKNESS
6.625" O.D.	13¾"	10¼"	EIGHT (8)-1" DIA.	2"
8.625" O.D.	17½"	13"	EIGHT (8)-1¼" DIA.	2"

* TOP & BOTTOM TRUSS CHORD BRACING PATTERN SIMILAR TO FRONT AND REAR BRACING

SECTION B-B

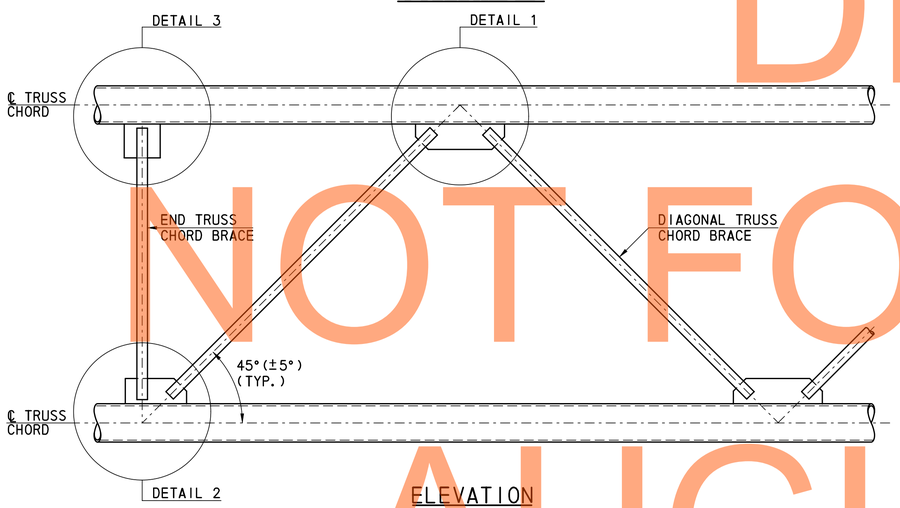

ELEVATION

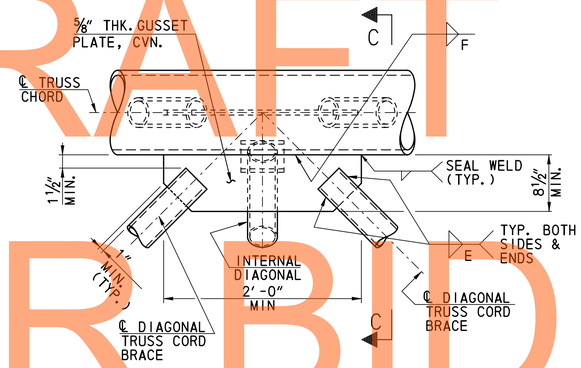

DETAIL 1

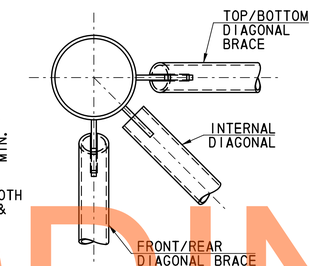

SECTION C-C

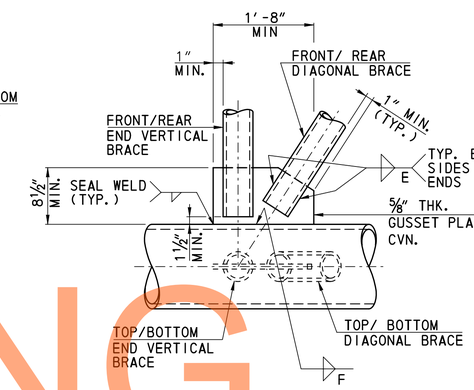

DETAIL 2

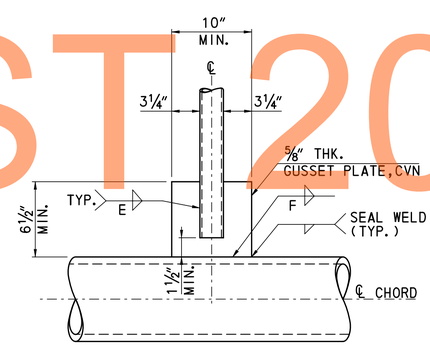

DETAIL 3

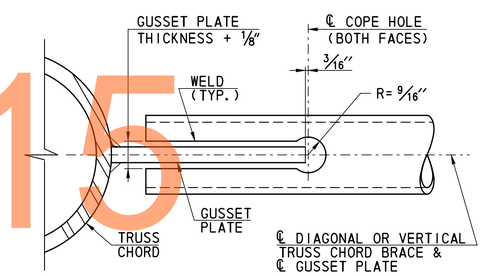

COPE HOLE DETAIL

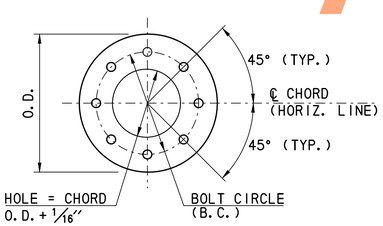

SECTION D-D

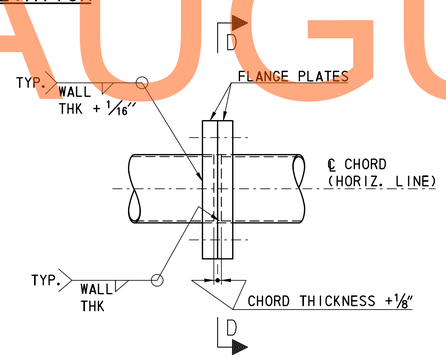

ELEVATION

CHORD SPLICE DETAILS

NOTES:

- COPE HOLES TO BE PROVIDED AT BOTH ENDS AND BOTH FACES OF ALL END VERTICALS AND END DIAGONALS.
- TRUSS CHORD BRACING SHALL BE COPED FOR PROPER FIT UP TO TRUSS CHORD IN ACCORDANCE WITH AWS D1.1.
- PROPER AND ADEQUATE VENTING FOR GALVANIZING SHALL BE PROVIDED. ALL VENTING HOLES SHALL BE INTERNAL AND CONFORM TO ASTM A 385.
- FOR LOCATION OF SECTION B-B, SEE DRAWING SS-36.

DRAFT
NOT FOR BIDDING
AUGUST 2015

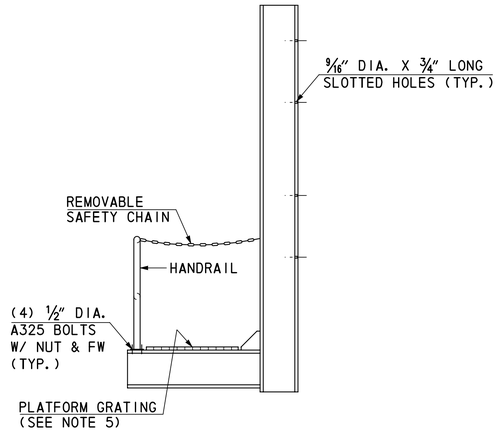

RIGHT SIDE
ENTRY PLATFORM

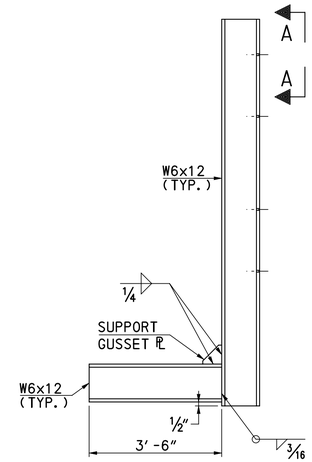

PLATFORM
SUPPORT DETAILS

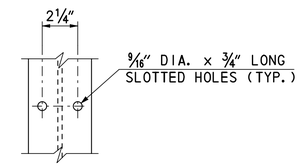

SECTION A-A

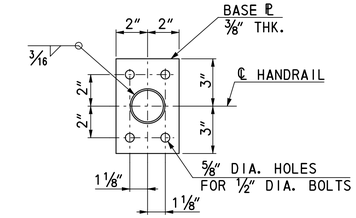

SECTION B-B

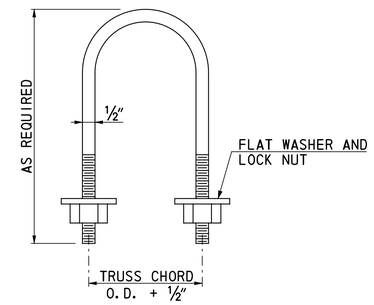

U-BOLT DETAIL

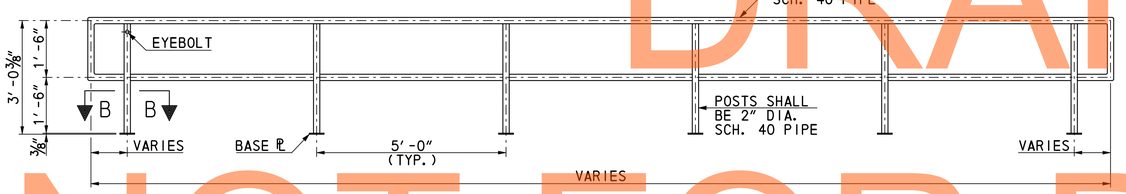

HANDRAIL DETAIL

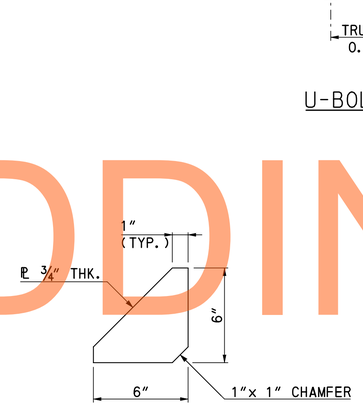

SUPPORT GUSSET PL

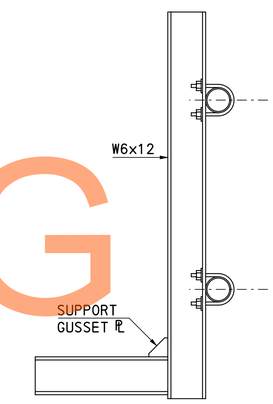

DETAIL AT
PLATFORM SUPPORT

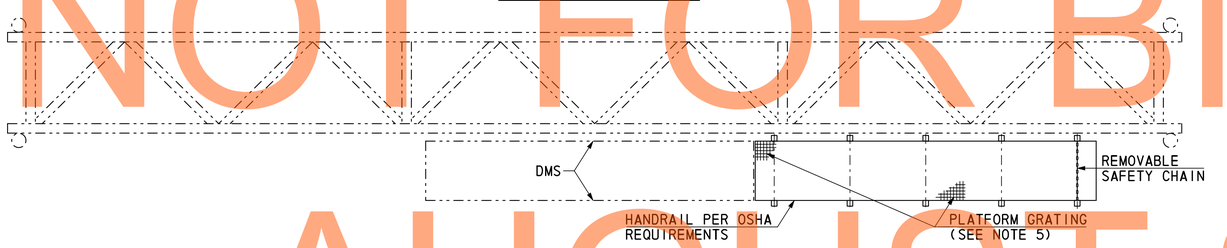

PLAN - CATWALK FOR DMS SIGN STRUCTURE

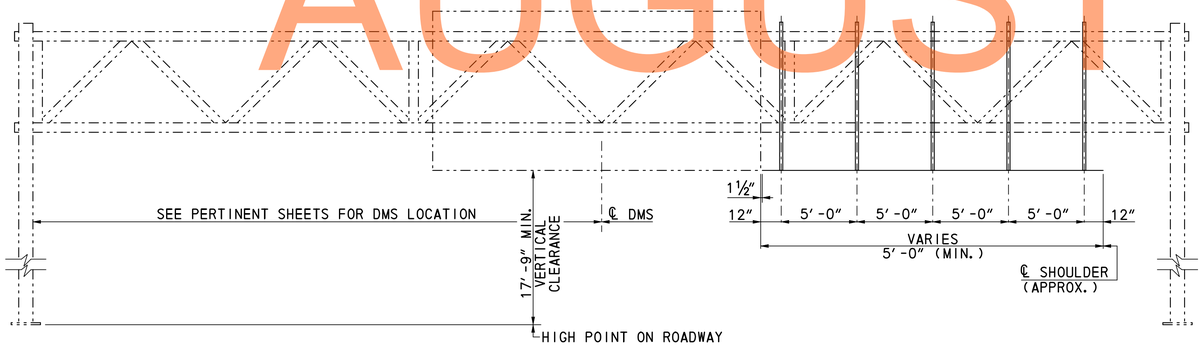

ELEVATION - CATWALK FOR DMS SIGN STRUCTURE
DIRECTION OF TRAFFIC

NOTE
LAYOUT OF PLATFORM SUPPORT IS FOR INFORMATIONAL PURPOSES ONLY. ACTUAL LAYOUT SHALL BE SUBMITTED TO THE ENGINEER AS A SHOP DRAWING FOR REVIEW AND APPROVAL.

NOTES

1. ALL PLATES AND STRUCTURAL SHAPES TO CONFORM TO A709, GRADE 36, AND GALVANIZED TO CONFORM TO A123.
2. ALL HARDWARE TO BE GALVANIZED IN CONFORMANCE WITH A153. U-BOLTS SHALL CONFORM TO A276 TYPE 304 (STAINLESS STEEL) OR A307.
3. ALL WELDING SHALL BE IN ACCORDANCE WITH AASHTO/AWS BRIDGE WELDING CODE D1.5.
4. ALL PIPE FOR HANDRAIL TO BE ASTM A500 GRADE 'A'.
5. ALL GRATING TO BE 1 1/2" THICK GALVANIZED AND ABLE TO WITHSTAND 100 LBS/SQ FT LIVE LOAD.
6. ALL RAIL SHALL BE DESIGNED TO CARRY ONE 500 POUND CONCENTRATED LOAD, PLACED ALONG TOP OF RAILING.
7. USE LOCK NUTS AND FLAT WASHERS FOR ALL 'U' BOLTS.
8. THE COST FOR FURNISHING AND INSTALLING THE PLATFORM GRATING, PLATFORM SUPPORTS, HANDRAIL AND THE ASSOCIATED HARDWARE SHALL BE INCLUDED UNDER THE PAYMENT FOR THE PERTINENT OVERHEAD SIGN STRUCTURE ITEM OR PERTINENT CANTILEVER SIGN STRUCTURE ITEM.

DRAFT
NOT FOR BIDDING
AUGUST 2015

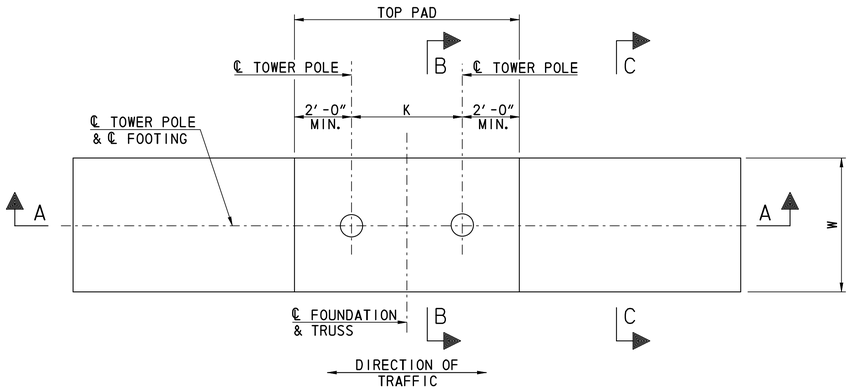

PLAN

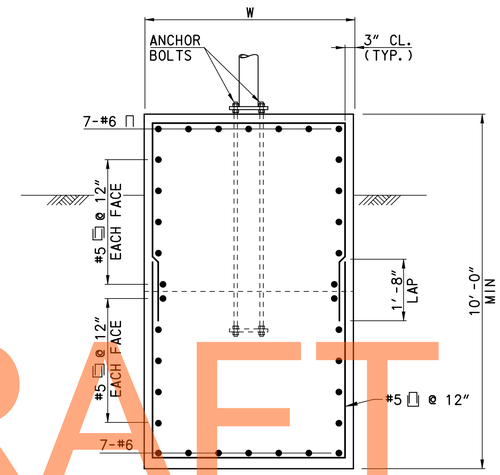

SECTION B-B

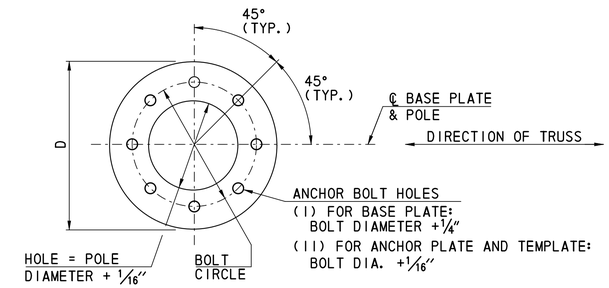

PLAN

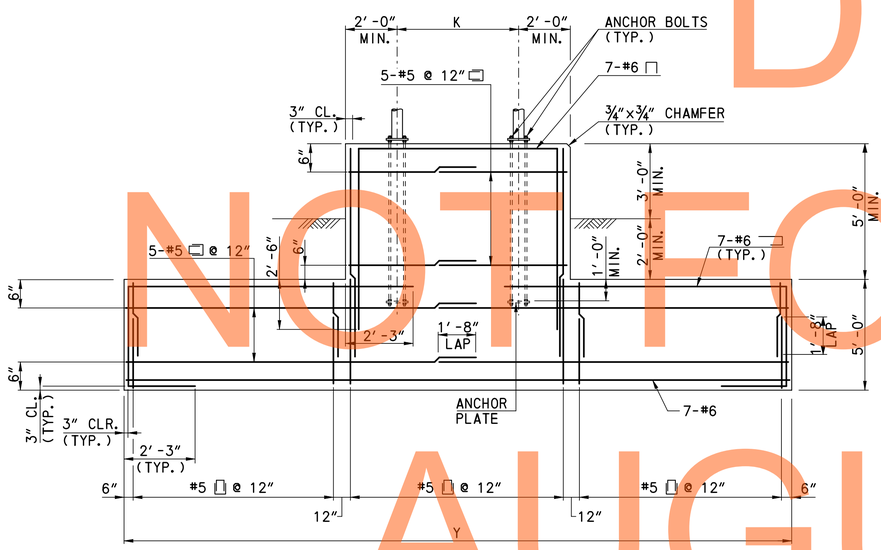

SECTION A-A

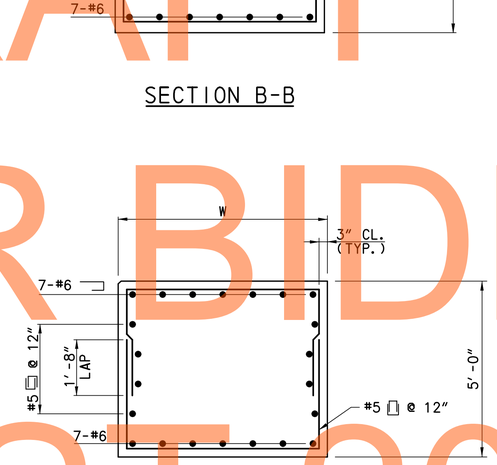

SECTION C-C

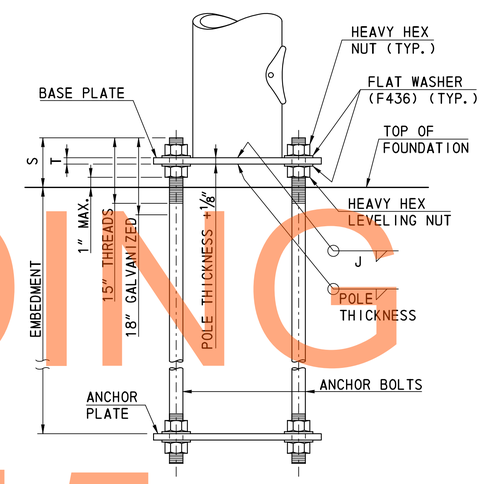

SECTION

BASE PLATE AND ANCHOR PLATE DETAILS

DRAFT
NOT FOR BIDDING
AUGUST 2015

BASE PLATE SCHEDULE									
TOWER POLE SIZE	K	D	BOLT CIRCLE	T	S	ANCHOR BOLT DIA.	MINIMUM EMBEDMENT LENGTH	ANCHOR PLATE SIZE	FILLET WELD SIZE J
20.00″ O.D. × 0.344″ THK.	7′-0″	36″	27½″	3″	11¼″	2¾″	6′-0″	¾″ × 36″ DIA.	7/16″
24.00″ O.D. × 0.312″ THK.	7′-6″	41½″	32″	3″	12″	3″	6′-6″	¾″ × 41½″ DIA.	7/16″

FOUNDATION DETAIL SCHEDULE		
STRUCTURE MARK	FOOTING DIMENSION	
	W	Y
DMS-1	6′-0″	26′-0″
OH-2	6′-0″	26′-0″
OH-3	6′-0″	26′-0″
OH-5	6′-0″	26′-0″
OH-6	6′-0″	26′-0″

NOTES:

- ALL ANCHOR BOLTS SHALL BE PLUMB AFTER FOUNDATION INSTALLATION. STEEL TEMPLATE PLATE SHALL BE USED TO SET ANCHOR BOLTS.
- BASE PLATE SHALL BE IN FULL CONTACT WITH ALL FLAT WASHERS.
- ALL ANCHOR BOLTS SHALL BE TIGHTENED USING TURN OF NUT METHOD. (30° MIN. TO 45° MAX. TURN AFTER SNUG FIT).
- GROUT SHALL NOT BE PLACED BETWEEN THE BASE PLATE AND CONCRETE BASE.

SS-37

$DGNNAME$ $DATE$ 11:37:12 PM

DELAWARE DEPARTMENT OF TRANSPORTATION

ADDENDUMS / REVISIONS

NOT TO SCALE

US 301 & SR 1 INTERCHANGE

CONTRACT	BRIDGE NO.	
T200911302	DESIGNED BY:	BSW
COUNTY		
NEW CASTLE	CHECKED BY:	BJH

FOUNDATION DETAILS

SHEET NO. 486

TOTAL SHTS. 491

CONDUIT RUN SCHEDULE

CO#	# OF CONDUITS	SIZE	LENGTH	B/T/O	AMOUNT AND TYPE OF CABLE/ WIRE
1*	1	1.5 IN	244 FT	-	<REMOVE EX. (1) 2/*8 U.F.W./GROUND>
2*	1	2.5 IN	120 FT	-	<REMOVE EX. (1) 4/*18>
3*	1	1.5 IN	16 FT	-	<REMOVE EX. (2) LOOP CABLES>
4*	2	2.5 IN	7 FT	-	<REMOVE EX. (3) 4/*18, EX. (2) 16/*14, EX. (1) FIBER OPTIC CABLE>
5*	1	2.5 IN	6 FT	-	<REMOVE EX. (2) 4/*18, EX. (1) FIBER OPTIC CABLE>
6*	1	2.5 IN	145 FT	-	<REMOVE EX. (2) 4/*18, EX. (1) FIBER OPTIC CABLE>
7*	1	2.5 IN	150 FT	-	<REMOVE EX. (2) 4/*18, EX. (1) FIBER OPTIC CABLE>
8*	1	2.5 IN	256 FT	-	<REMOVE EX. (1) 4/*18, EX. (1) FIBER OPTIC CABLE>
9*	1	1.5 IN	13 FT	-	<REMOVE EX. (4) LOOP CABLES>
10*	1	1.5 IN	36 FT	-	<REMOVE EX. (4) LOOP CABLES>
11*	1	2.5 IN	190 FT	-	<REMOVE EX. (1) FIBER OPTIC CABLE>
12*	1	2.5 IN	5 FT	-	<REMOVE EX. (2) 16/*14, EX. (2) 4/*18, EX. (1) FIBER OPTIC CABLE>

*DENOTES EXISTING CONDUIT

B = BORE, T = TRENCH, O = OPEN CUT

NOTES:

7. DELDOT TRAFFIC CONTRACTOR SHALL REMOVE ALL EXISTING EQUIPMENT DESIGNATED FOR REMOVAL BY OTHERS INCLUDING SIGNAL POLES, SPAN WIRE, SIGNAL HEADS, SIGNAL CABINET AND ELECTRICAL CABLES.
8. THE PROJECT CONTRACTOR SHALL REMOVE ALL EXISTING EQUIPMENT DESIGNATED FOR REMOVAL BY CONTRACTOR INCLUDING SIGNAL POLE AND CABINET FOUNDATIONS, JUNCTION WELLS AND ELECTRICAL SERVICE EQUIPMENT.
9. THE CONTRACTOR SHALL COORDINATE WITH DELMARVA POWER FOR DISCONNECTION OF THE EXISTING ELECTRICAL SERVICE AND REMOVAL OF THE ELECTRICAL SERVICE RISER.

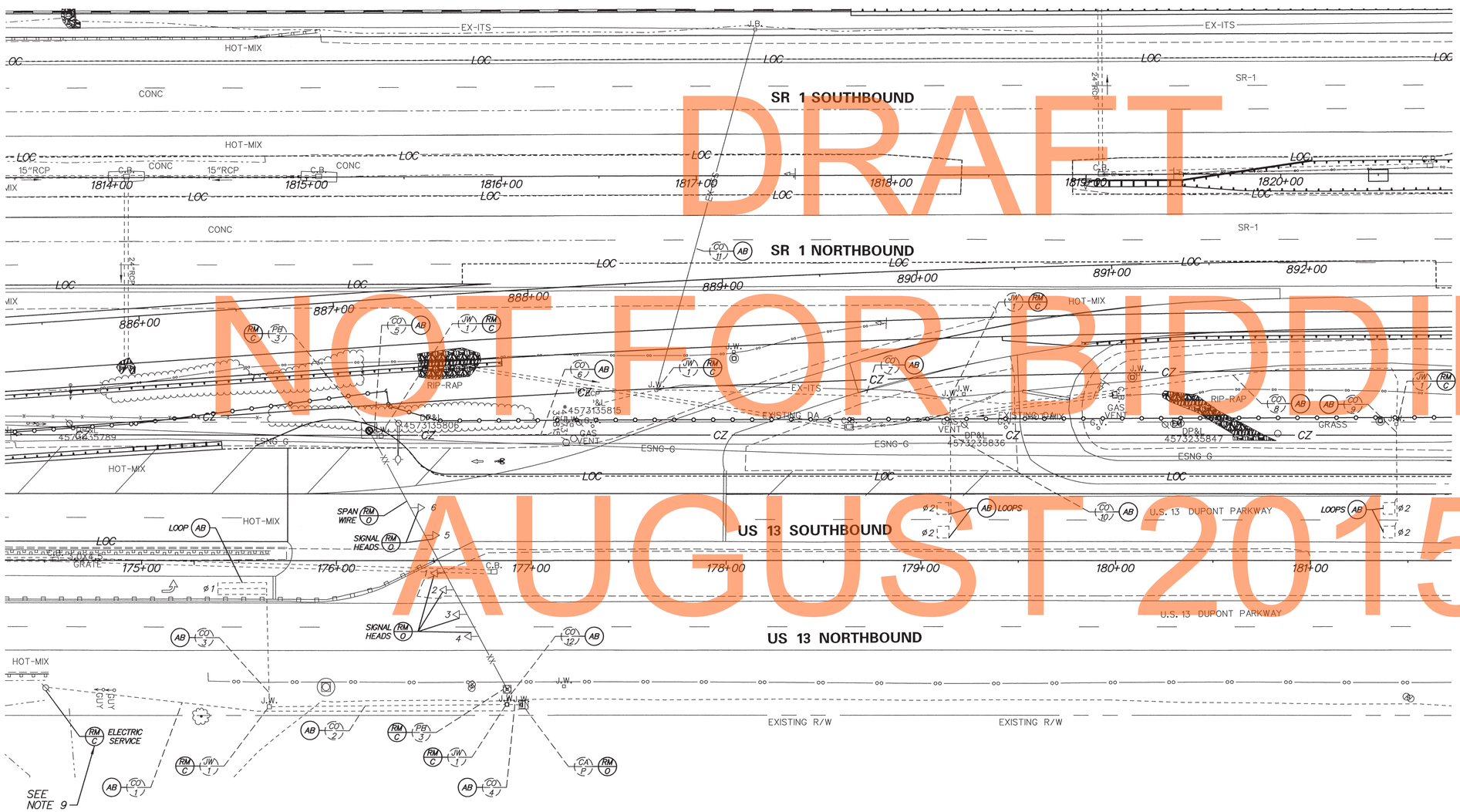

DRAFT
NOT FOR BIDDING
AUGUST 2015

SIGNAL PHASING

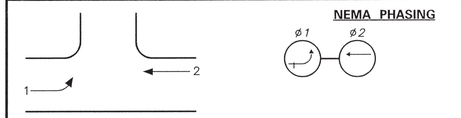

PHASING NOTES

1. PHASES ASSOCIATED BY A SOLID LINE WILL NOT OPERATE CONCURRENTLY.
2. PHASES ASSOCIATED BY A DASHED LINE WILL OPERATE CONCURRENTLY.

SIGNAL HEAD DIAGRAM

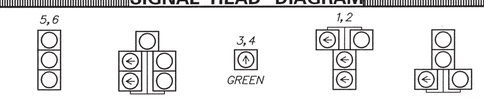

LEGEND

PROPOSED SIGNAL CABINET	REMOVE BY CONTRACTOR
EXISTING SIGNAL CABINET	REMOVE BY OTHERS
PROPOSED SIGNAL POLE BASE	ABANDON
EXISTING SIGNAL POLE BASE	PROPOSED POLE BASE IDENTIFIER (TYPE OF POLE BASE)
PROPOSED PEDESTRIAN POLE BASE	EXISTING POLE BASE IDENTIFIER (TYPE OF POLE BASE)
EXISTING PEDESTRIAN POLE BASE	PROPOSED JUNCTION WELL IDENTIFIER (TYPE OF JUNCTION WELL)
PROPOSED WOOD POLE	EXISTING JUNCTION WELL IDENTIFIER (TYPE OF JUNCTION WELL)
EXISTING UTILITY POLE	PROPOSED CONDUIT RUN IDENTIFIER (# OF CONDUIT RUN)
PROPOSED JUNCTION WELL	EXISTING CONDUIT RUN IDENTIFIER (# OF CONDUIT RUN)
EXISTING JUNCTION WELL	PROPOSED OVERHEAD RUN IDENTIFIER (# OF OVERHEAD RUN)
PROPOSED SIGNAL HEAD	EXISTING OVERHEAD RUN IDENTIFIER (# OF OVERHEAD RUN)
EXISTING SIGNAL HEAD	PROPOSED MAST ARM IDENTIFIER (LENGTH OF ARM)
PROPOSED PEDESTRIAN SIGNAL HEAD	EXISTING MAST ARM IDENTIFIER (LENGTH OF ARM)
EXISTING PEDESTRIAN SIGNAL HEAD	PROPOSED CABINET IDENTIFIER (TYPE OF CABINET)
PROPOSED PEDESTRIAN PUSHBUTTON	EXISTING CABINET IDENTIFIER (TYPE OF CABINET)
EXISTING PEDESTRIAN PUSHBUTTON	PROPOSED SPAN WIRE
PROPOSED VIDEO DETECTION	EXISTING SPAN WIRE
EXISTING VIDEO DETECTION	RIGHT-OF-WAY OR PROPERTY LINE
PROPOSED MICROWAVE DETECTION	PROPOSED SPAN INSULATOR
EXISTING MICROWAVE DETECTION	EXISTING SPAN INSULATOR
OVERHEAD SIGNING	SERVICE PEDESTAL
PROPOSED OPTICOM RECEIVER	
EXISTING OPTICOM RECEIVER	
PROPOSED MAST ARM	
EXISTING MAST ARM	
PROPOSED LUMINAIRE	
EXISTING LUMINAIRE	
PROPOSED LOOP DETECTOR (TYPE 1 OR 2)	
EXISTING LOOP DETECTOR (TYPE 1 OR 2)	

GENERAL SIGNAL NOTES

1. LOOP DETECTORS (EXISTING TO BE ABANDONED):
   TYPE #1 - 6' x 6' - US 13 SOUTHBOUND MOVEMENT.
   TYPE #2 - 6' x 25' - US 13 NORTHBOUND LEFT-TURN MOVEMENT.
2. ALL SIGNAL POLES ARE 32 FEET, EXCEPT WHERE SHOWN.
3. CO #1 IS NOT DRAWN TO SCALE, NOR IS THE DIRECTION NECESSARILY CORRECT.
4. ALL SIGNAL EQUIPMENT REMOVED FROM PROJECT IS TO BE RETURNED TO DELDOT TRAFFIC - DOVER, DELAWARE.
5. POLE BASES, CABINET BASE AND CONDUIT JUNCTION WELLS ARE TO BE REMOVED IN ACCORDANCE WITH SECTION 201 AND 202 OF THE STANDARD SPECIFICATIONS OR AS DIRECTED BY ENGINEER. EXISTING CONDUIT IS TO BE ABANDONED.
6. ALL UNDERGROUND AND OVERHEAD UTILITIES SHOWN ON THESE PLANS ARE SCHEMATIC ONLY AND MAY NOT BE COMPLETE. THE CONTRACTOR SHALL BE RESPONSIBLE FOR NOTIFYING MISS UTILITY, AND/OR THE APPROPRIATE UTILITY PRIOR TO THE BEGINNING OF CONSTRUCTION FOR THE UTILITY MARKOUTS. IF THE CONTRACTOR PERCEIVES THAT A CONFLICT BETWEEN UTILITIES AND THE TRAFFIC SIGNAL WILL OCCUR, THE CONTRACTOR SHALL NOTIFY DELDOT TRAFFIC IMMEDIATELY BEFORE CONSTRUCTION.

RECOMMENDED _____ DATE: 11.29.12 | RECOMMENDED _____ DATE: _____ | RECOMMENDED _____ DATE: _____ | APPROVED TRAFFIC ENGINEER _____ DATE: 11/30/12 | APPROVED FOR INSTALLATION CHIEF TRAFFIC ENGINEER _____ DATE: 11/30/12

DELAWARE DEPARTMENT OF TRANSPORTATION

ADDENDUM / REVISIONS

SCALE 0 30 60 90 FEET

US 301 & SR 1 INTERCHANGE

CONTRACT	T200911302
COUNTY	NEW CASTLE
PERMIT NO.	N-608
DESIGNED BY:	J.D.C.
CHECKED BY:	J.M.M.

SG-01: SIGNAL REMOVAL PLAN US 13 @ SR 1 NB

SHEET NO.	487
TOTAL SHTS.	491

N:\3653_2009\Contract 1B\CADD\SG001U301_1B.dgn
11/29/2012 7:02:09 AM