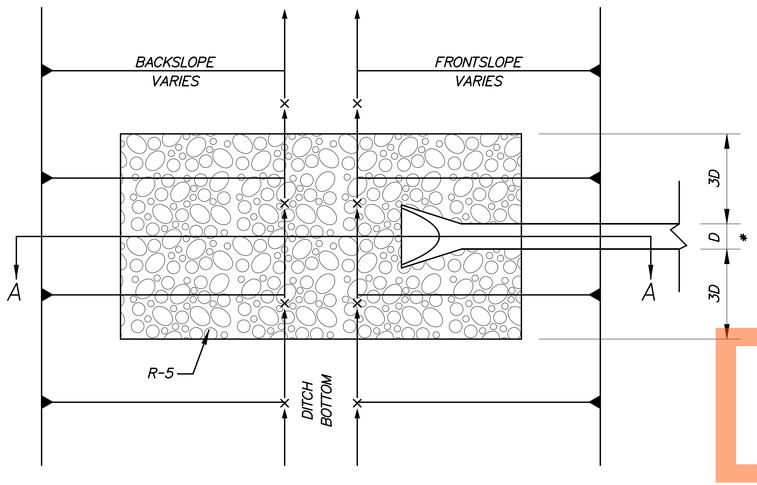

PLAN VIEW

* DIAMETER OR CIRCULAR EQUIVALENT IF PIPE IS ELLIPTICAL

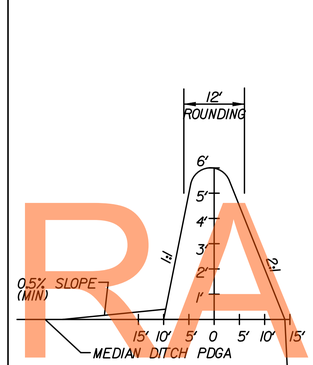

SECTION A–A
N. T. S.

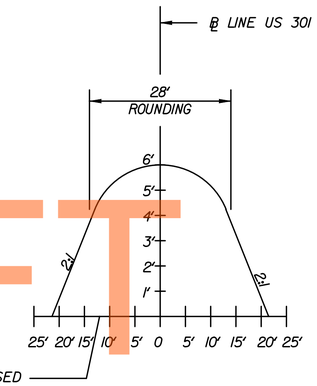

SECTION B–B
N. T. S.

NOTES:

1. DISTANCE BETWEEN THE OUTSIDE FACE OF BRIDGE PARAPET AND THE TOE OF SLOPE FOR THE EARTH MOUND SHALL NOT EXCEED FOUR (4) FEET.
2. SEE PLAN SHEETS AND BRIDGE PLANS FOR THE LOCATIONS OF EARTH MOUNDS AT BRIDGE APPROACHES.
3. EARTH MOUND SHALL BE CONSTRUCTED OF MATERIALS MEETING THE REQUIREMENTS OF BORROW, TYPE F AND COMPACTED IN ACCORDANCE WITH SECTION 202.
4. STABILIZE MOUND SURFACE WITH TOPSOIL, SEED AND MULCH PER ROADWAY TYPICAL SECTIONS.

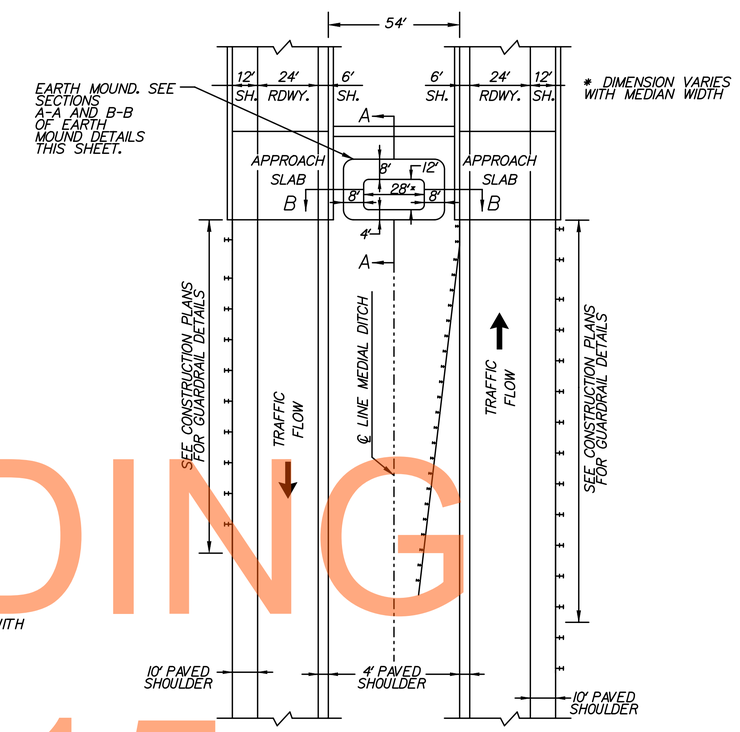

** OR TO TOP OF BERM, WHICHEVER ELEVATION IS LOWER

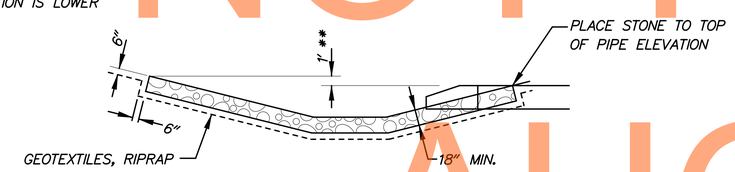

SECTION A-A

PIPE OUTLET TO DITCH PROTECTION
NOT TO SCALE

EARTH MOUND DETAILS AT BRIDGE APPROACHES
NOT TO SCALE

BRIDGE PROTECTION SYSTEM MAINLINE BRIDGE PARAPET AND MEDIAN OPENING PROTECTION PLAN
NOT TO SCALE

DRAFT
NOT FOR BIDDING
AUGUST 2015

$DATE$
$FILE$

DELAWARE DEPARTMENT OF TRANSPORTATION	ADDENDUMS / REVISIONS	NOT TO SCALE	US 301, NORFOLK SOUTHERN RR TO SR 896	CONTRACT T200911301 / COUNTY NEW CASTLE	BRIDGE NO. / DESIGNED BY: WJD / CHECKED BY: MAA	CONSTRUCTION DETAILS	DT-01 / SHEET NO. 66 / TOTAL SHTS. 240

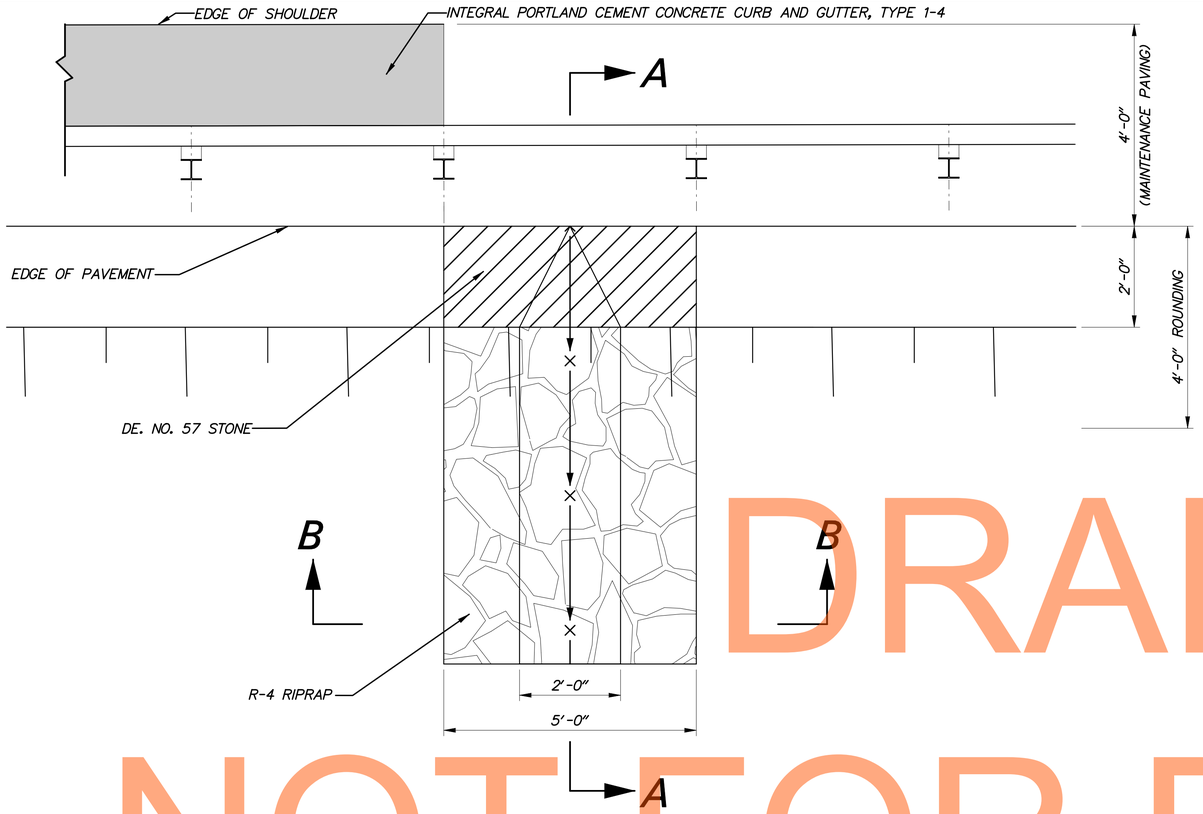

PLAN

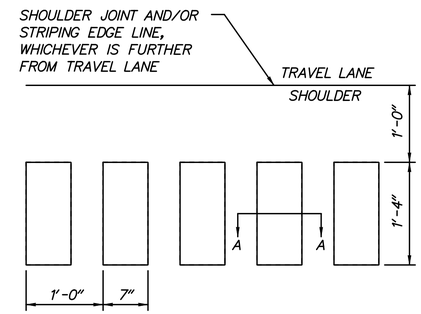

PLAN

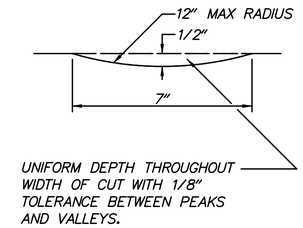

SECTION A–A

EDGELINE RUMBLE STRIPS DETAIL

NOT TO SCALE

NOTES:

- ALL WORK REQUIRED TO COMPLETE THE INSTALLATION OF EDGELINE RUMBLE STRIPS SHALL BE INCIDENTAL TO ITEM 760017 - RUMBLE STRIPS, CONCRETE.
- RUMBLE STRIPS ARE NOT TO BE INSTALLED ON BRIDGE 2-1 AND BRIDGE 1-10 (INCLUDING MOMENT SLABS AND APPROACH SLABS).
- EDGELINE RUMBLE STRIPS SHALL BE INSTALLED ALONG ALL INSIDE AND OUTSIDE SHOULDERS OF THE US 301 MAINLINE, AS PER THIS DETAIL, THROUGHOUT THE PROJECT UNLESS OTHERWISE NOTED BELOW:
  -BRIDGE 1-467 AND BRIDGE 1-468: RUMBLE STRIPS SHALL NOT BE PLACED ON THE STRUCTURE, APPROACH SLABS OR MOMENT SLABS.

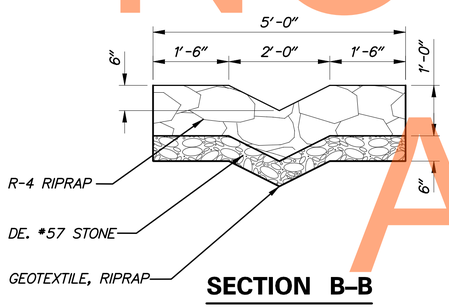

SECTION B–B

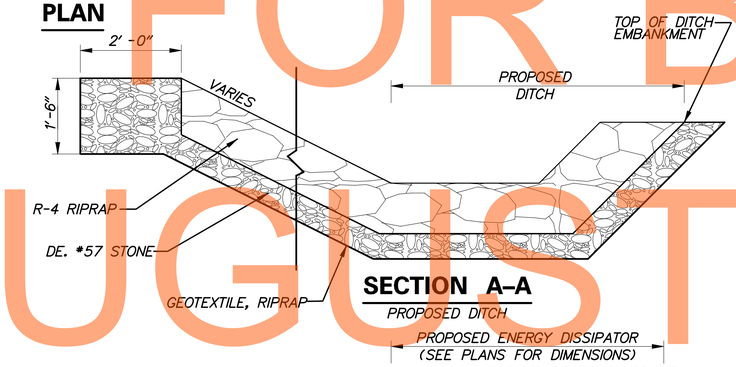

SECTION A–A

PROPOSED DITCH

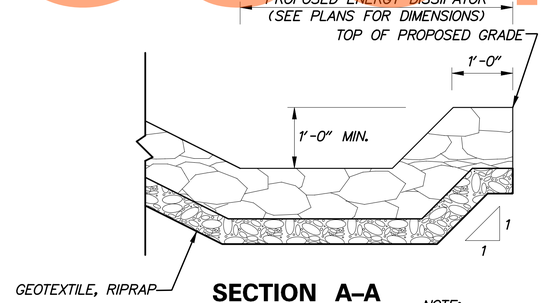

SECTION A–A

ENERGY DISSIPATOR

NOTE:
PAYMENT SHALL BE MADE UNDER THE RESPECTIVE PAY ITEMS.

STONE OUTLET DETAILS

NOT TO SCALE

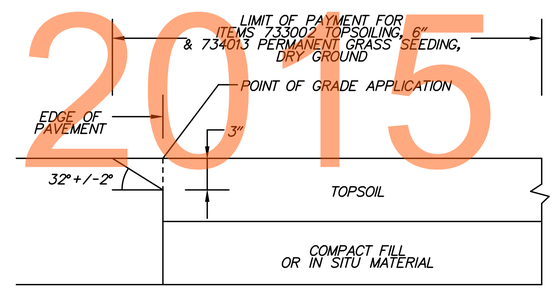

NOTES:

1. FOR ADDITIONAL INFORMATION, SEE ITEM 401752 - SAFETY EDGE FOR ROADWAY PAVEMENT.

2. THE SAFETY EDGE SHALL NOT BE CONSTRUCTED ADJACENT TO OTHER PAVEMENTS, CURB, CURB & GUTTER, CONCRETE SAFETY BARRIER OR MAINTENANCE PAVEMENT UNDER GUARDRAIL. THE CONTRACTOR SHALL STAKE OUT THE LIMITS OF THE AREAS NOT TO RECEIVE THE SAFETY EDGE FOR APPROVAL BY THE ENGINEER PRIOR TO BEGINNING PAVEMENT OPERATIONS.

SAFETY EDGE – CONCRETE PAVEMENT

NOT TO SCALE

DRAFT
NOT FOR BIDDING
AUGUST 2015

$DATE$

$FILEA$

DT-02

DELAWARE DEPARTMENT OF TRANSPORTATION	ADDENDUMS / REVISIONS	NOT TO SCALE	US 301, NORFOLK SOUTHERN RR TO SR 896	CONTRACT T200911301	BRIDGE NO.	DESIGNED BY: WJD	CHECKED BY: MAA	COUNTY NEW CASTLE	CONSTRUCTION DETAILS	SHEET NO. 67	TOTAL SHTS. 240

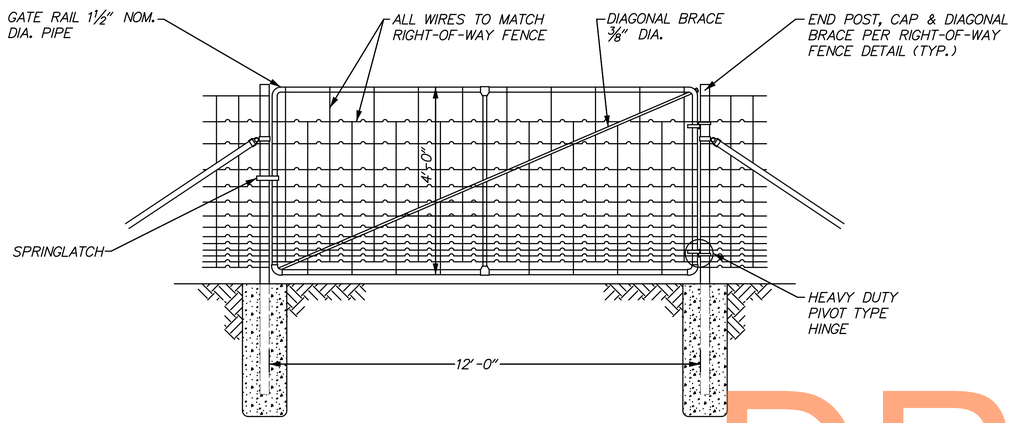

ITEM 727001 – RIGHT-OF-WAY FENCE GATE

NOT TO SCALE

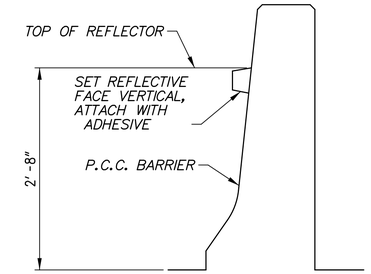

REFLECTOR DETAIL

NOT TO SCALE

REFLECTOR DETAIL NOTES:

1. COLOR OF REFLECTOR ON TRAFFIC SIDE SHALL MATCH ADJACENT LANE LINE COLOR. BACK SIDE OF ALL REFLECTORS SHALL BE RED.
2. THE SPACING OF REFLECTORS ON PERMANENT P.C.C. BARRIER SHALL BE COORDINATED WITH THE DELINEATORS AT THE APPROACHES TO THE BARRIER SUCH THAT THE SPACING OF DELINEATORS/REFLECTORS DOES NOT EXCEED 100 FT.
3. ALL COST SHALL BE INCLUDED IN ITEM 720544 - REFLECTORS, WHITE, CONCRETE AND 720545 - REFLECTORS, YELLOW, CONCRETE.

NOTES

1. THIS DETAIL SHALL APPLY TO PAVEMENT CONSTRUCTED BY THE FIRST CONTRACTOR TO PERFORM WORK IN THIS AREA. SELECTION OF WHICH CONTRACT WILL CONSTRUCT THIS DETAIL WILL BE BASED UPON FIELD CONDITIONS AND WILL BE AT THE DIRECTION OF THE ENGINEER. PAYMENT SHALL BE MADE UNDER THE APPLICABLE CONTRACT PAY ITEMS.
2. THE FIRST CONTRACTOR SHALL COVER THE EXPOSED PERMEABLE TREATED BASE COURSE AND SOIL CEMENT BASE COURSE, INCLUDING SIDES AND ENDS, WITH POLYETHYLENE SHEETING, PROPERLY ANCHORED AND LAPPED AT LEAST 18". NO CONSTRUCTION TRAFFIC OF ANY KIND SHALL BE PERMITTED TO TRAVERSE OVER THE PTB OR SOIL CEMENT AT ANY TIME, EITHER COVERED OR UNCOVERED WITH POLYETHYLENE, EXCEPT FOR NECESSARY EQUIPMENT UTILIZED DURING PAVING OPERATIONS. ALL COSTS FOR FURNISHING, INSTALLING AND MAINTAINING THE POLYETHYLENE SHALL BE INCIDENTAL TO THE UNIT PRICE BID FOR THE PTB AND SOIL CEMENT BASE COURSE PAY ITEMS.
3. THE SECOND CONTRACTOR TO PERFORM OPERATIONS IN THIS AREA SHALL REMOVE AND PROPERLY DISPOSE OF THE POLYETHYLENE AND ANCHORING IMMEDIATELY PRIOR TO BEGINNING PAVEMENT OPERATIONS WITH ALL COSTS INCIDENTAL TO THE UNIT PRICE BID FOR THE PTB AND SOIL CEMENT BASE COURSE PAY ITEMS.
4. THE SECOND CONTRACTOR SHALL ALSO SAW CUT THE ENDS OF THE PTB AND SOIL CEMENT BASE COURSE A MINIMUM OF 6" FROM THE END FINISHED BY THE FIRST CONTRACTOR OR AS DIRECTED BY THE ENGINEER. COSTS FOR SAWCUTTING THE PTB SHALL BE MEASURED FOR PAYMENT UNDER ITEM 762001 SAWCUTTING, HOT MIX. COSTS FOR SAWCUTTING THE SOIL CEMENT BASE COURSE SHALL BE MEASURED FOR PAYMENT UNDER ITEM 762002 SAWCUTTING, CONCRETE, FULL DEPTH.
5. THE FIRST CONTRACTOR SHALL CONSTRUCT AND MAINTAIN EDGE BERMS AND TEMPORARY SLOPE DRAINS ALONG THE TOP OF ALL SIDE AND END SLOPES PER THE INCREMENTAL STABILIZATION DETAILS (STANDARD NO. E-1). WHEN THE FIRST CONTRACTOR'S WORK IN THIS AREA IS COMPLETE AND ACCEPTED BY THE ENGINEER, THE FIRST CONTRACTOR SHALL LEAVE ANY EROSION AND SEDIMENT CONTROL MATERIALS ON THE SITE NEEDED TO PROVIDE PROTECTION FOR AREAS WHERE THE SECOND CONTRACTOR IS TO PERFORM WORK WITH COSTS INCIDENTAL TO THE RESPECTIVE PAY ITEM.
6. THE SECOND CONTRACTOR SHALL TAKE POSSESSION AND BE RESPONSIBLE FOR MAINTAINING, REPLACING AS NEEDED, REMOVING THE EROSION AND SEDIMENT CONTROL MATERIALS AND MEASURES LEFT IN PLACE BY THE FIRST CONTRACTOR AND RESTORATION OF THE AREAS WITH ALL COSTS INCIDENTAL TO ITEM 202000.
7. THE CONTRACTOR FOR CONTRACT T200911301 IS EXPECTED TO BE THE FIRST CONTRACTOR DESCRIBED IN THE ABOVE NOTES.

PAVEMENT DETAIL AT LIMIT OF CONSTRUCTION (STA. 682+00)

NOT TO SCALE

NOTE: SEE BRIDGE 1-468 FOR DETAIL OF SOUTH LIMIT OF PROJECT

DRAFT
FOR BIDDING
AUGUST 2015

$DATE$

$FILEA$

DELAWARE DEPARTMENT OF TRANSPORTATION	ADDENDUMS / REVISIONS	NOT TO SCALE	US 301, NORFOLK SOUTHERN RR TO SR 896	CONTRACT T200911301	BRIDGE NO.	CONSTRUCTION DETAILS	DT-03
				COUNTY NEW CASTLE	DESIGNED BY: WJD		SHEET NO. 68
					CHECKED BY: MAA		TOTAL SHTS. 240

REINFORCED CONCRETE FLARED END SECTION
12" - 33" DIAMETER

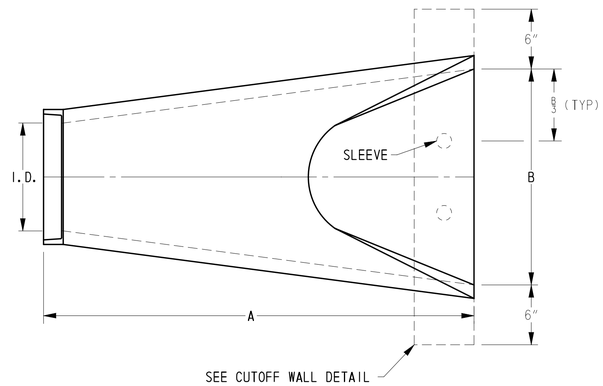

PLAN VIEW

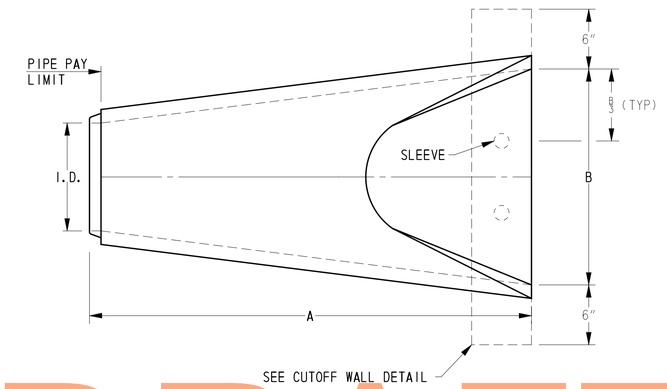

PLAN VIEW

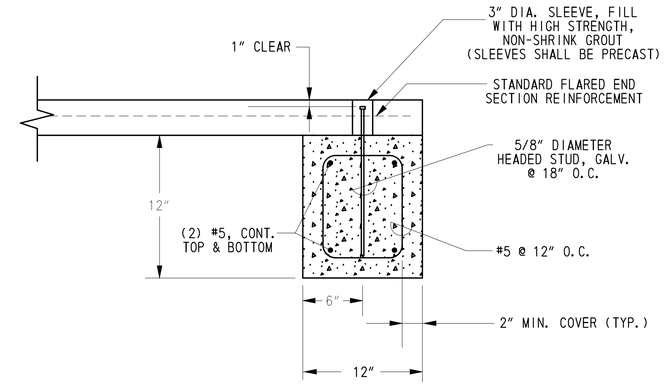

CUTOFF WALL DETAIL
N.T.S.

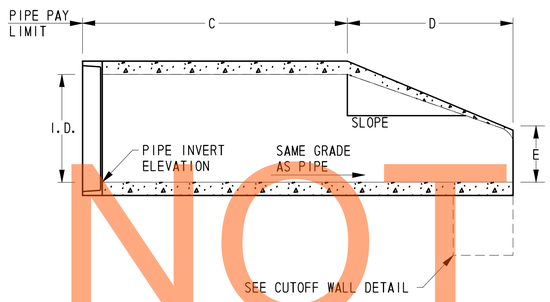

SIDE VIEW

FLARED END SECTION - OUTLET
N.T.S.

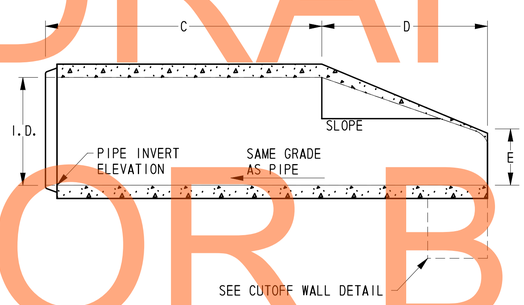

SIDE VIEW

FLARED END SECTION - INLET
N.T.S.

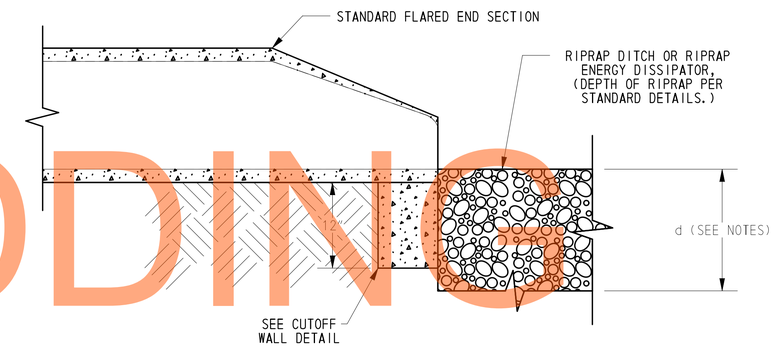

SIDE VIEW WITH OUTLET PROTECTION
N.T.S.

PIPE I.D.	SLOPE	WALL	A (INCHES)	B (INCHES)	C (INCHES)	D (INCHES)	E (INCHES)
12	3:1	2	69	24	48	21	5
15	3:1	2 1/4	73	30	46	27	6
18	3:1	2 1/2	73	36	46	27	9
21	3:1	2 3/4	74	42	38	36	9
24	3:1	3	72 1/2	48	29	43 1/2	9 1/2
27	3:1	3 1/4	75	54	25 1/2	49 1/2	10 1/2
30	3:1	3 1/2	73 3/4	60	19 3/4	54	12
33	3:1	3 3/4	81	66	26	55	14

NOTES:

1. FLARED END SECTIONS SHALL BE MANUFACTURED TO ASTM C-76 AND AASHTO M-170 WITH CLASS III REINFORCEMENT.
2. FLARED END SECTIONS SHALL BE BEDDED IN ACCORDANCE WITH DELDOT STANDARD SPECIFICATION 612, REINFORCED CONCRETE PIPE.
3. FLARED END SECTIONS 27 INCHES AND LARGER SHALL INCLUDE A 12 INCH WIDE CUTOFF WALL CONSTRUCTED AS SHOWN. CUTOFF WALL MAY BE CAST-IN-PLACE OR PRECAST CLASS B CONCRETE. ALL COSTS FOR THE CUTOFF WALL SHALL BE INCIDENTAL TO THE FLARED END SECTION.
4. DEPTH OF RIPRAP (d) PER STANDARD DETAILS.

DRAFT
NOT FOR BIDDING
AUGUST 2015

$DATE$

$FILEA$

DT-04

DELAWARE DEPARTMENT OF TRANSPORTATION	ADDENDUMS / REVISIONS	NOT TO SCALE	US 301, NORFOLK SOUTHERN RR TO SR 896	CONTRACT T200911301	BRIDGE NO.	CONSTRUCTION DETAILS	SHEET NO. 69
				COUNTY NEW CASTLE	DESIGNED BY: WJD		TOTAL SHTS. 240
					CHECKED BY: MAA		

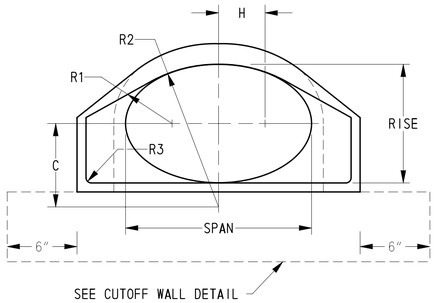

FRONT VIEW

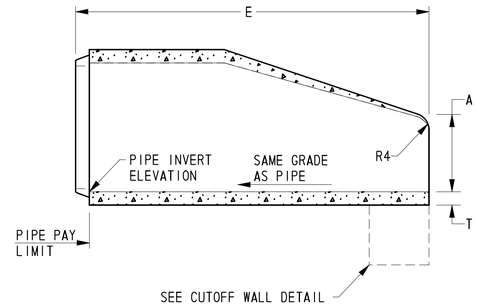

INLET SIDE VIEW

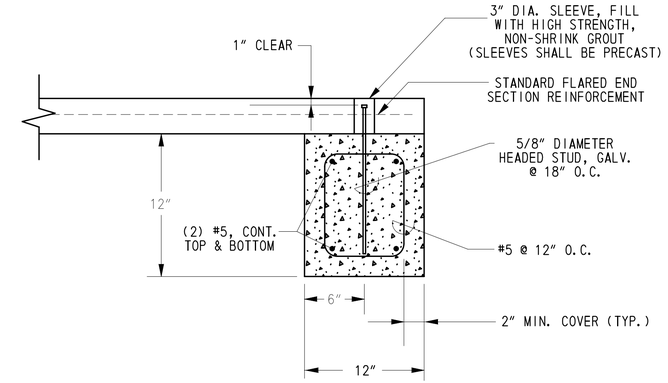

CUTOFF WALL DETAIL
N. T. S.

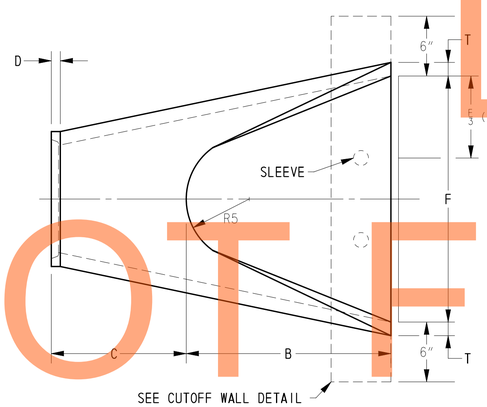

TOP VIEW

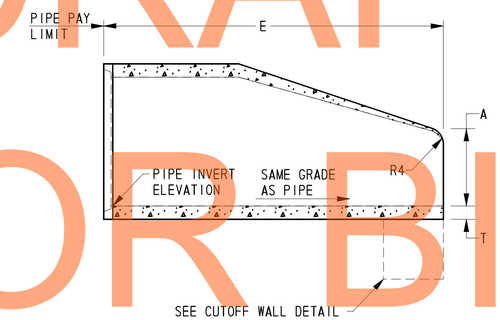

OUTLET SIDE VIEW

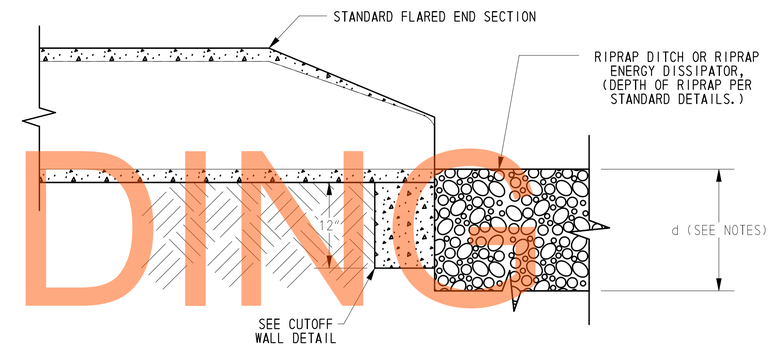

SIDE VIEW WITH OUTLET PROTECTION
N. T. S.

FLARED END SECTION - ELLIPTICAL
N. T. S.

ELLIPTICAL FLARED END SECTIONS
TABLE OF DIMENSIONS

NOMINAL		EQUIVALENT DIA.	ACTUAL		T (INCHES)	A (INCHES)	B	C	D (INCHES)	E	F (INCHES)	G (INCHES)	H (INCHES)	R1 (INCHES)	R2 (INCHES)	R3 (INCHES)	R4 (INCHES)	R5 (INCHES)
RISE	SPAN		RISE	SPAN														
14	23	18	14 5/8	22 7/8	2 3/4	6	2'-2"	3'-11"	2	6'-1"	36	12 25/32	5 11/32	8 27/32	20 11/16	1 1/2	3	12
19	30	24	19 1/8	30 1/8	3 1/4	9	2'-7"	3'-6"	2	6'-1"	48	16 11/16	6 27/32	11 15/32	29 1/2	1 1/2	3	14
22	34	27	21 9/16	34	3 1/2	10 1/2	2'-9"	3'-4"	2 1/4	6'-1"	54	18 3/4	7 3/4	12 3/4	33 1/32	1 1/2	3	14 1/2
24	38	30	24	37 7/8	3 3/4	12	4'-6"	1'-6"	2 1/2	6'-0"	60	20 13/16	8 11/16	14	36 9/16	1 1/2	3	15
27	42	33	26 23/32	41 15/16	4 1/2	11	5'-3"	2'-9"	3	8'-0"	72	24 31/32	10 5/16	16 13/16	43 7/8	1 1/2	4	18

NOTES:

1. FLARED END SECTIONS SHALL BE MANUFACTURED TO ASTM C-76 AND AASHTO M-170 WITH CLASS III REINFORCEMENT.
2. FLARED END SECTIONS SHALL BE BEDDED IN ACCORDANCE WITH DELDOT STANDARD SPECIFICATION 612, REINFORCED CONCRETE PIPE.
3. FLARED END SECTIONS WITH A RISE OF 27 INCHES AND LARGER SHALL INCLUDE A 12 INCH WIDE CUTOFF WALL CONSTRUCTED AS SHOWN. CUTOFF WALL MAY BE CAST-IN-PLACE OR PRECAST CLASS B CONCRETE. ALL COSTS FOR THE CUTOFF WALL SHALL BE INCIDENTAL TO THE FLARED END SECTION.
4. DEPTH OF RIPRAP (d) PER STANDARD DETAILS.

DRAFT
NOT FOR BIDDING
AUGUST 2015

$DATE$

$FILE$

DT-05

DELAWARE DEPARTMENT OF TRANSPORTATION

ADDENDUMS / REVISIONS

NOT TO SCALE

US 301, NORFOLK SOUTHERN RR TO SR 896

CONTRACT	BRIDGE NO.	
T200911301	DESIGNED BY:	WJD
COUNTY	CHECKED BY:	MAA
NEW CASTLE		

CONSTRUCTION DETAILS

SHEET NO. 70

TOTAL SHTS. 240

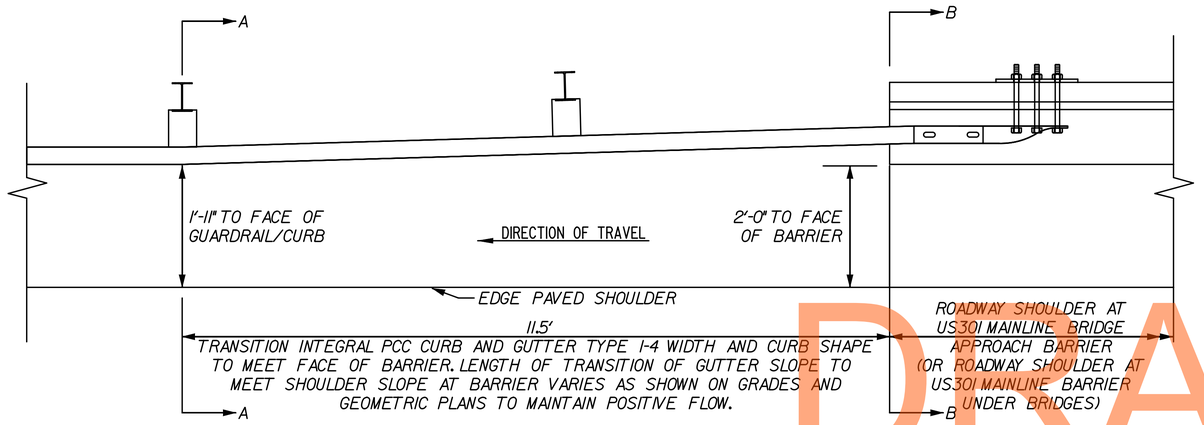

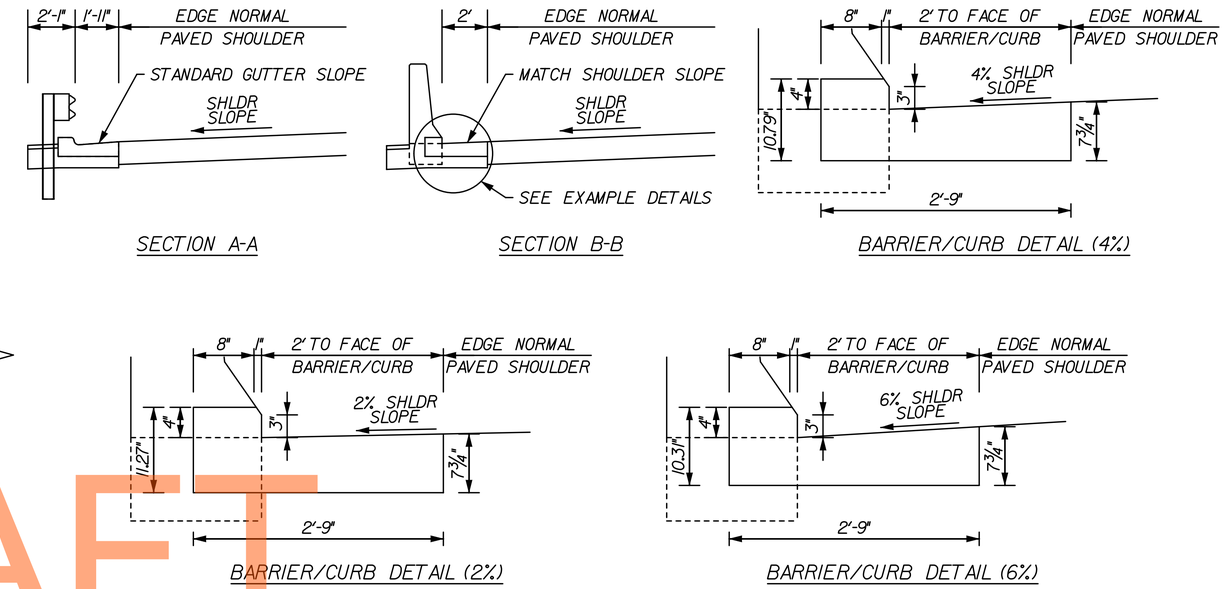

DRAFT

NOTES:

1. PLACE PREFORMED EXPANSION JOINT MATERIAL BETWEEN END OF CURB AND BARRIER PER SECTION 701.03.
2. TRANSITION LIMITS TO BE MEASURED FOR PAYMENT UNDER ITEM 701016 WITH ALL COSTS FOR TRANSITION INCLUDED IN ITEM 701016.

CURB TRANSITION DETAILS AT GUARDRAIL TO BARRIER CONNECTION (EXIT TYPE)

NOT TO SCALE

NOT FOR BIDDING
AUGUST 2015

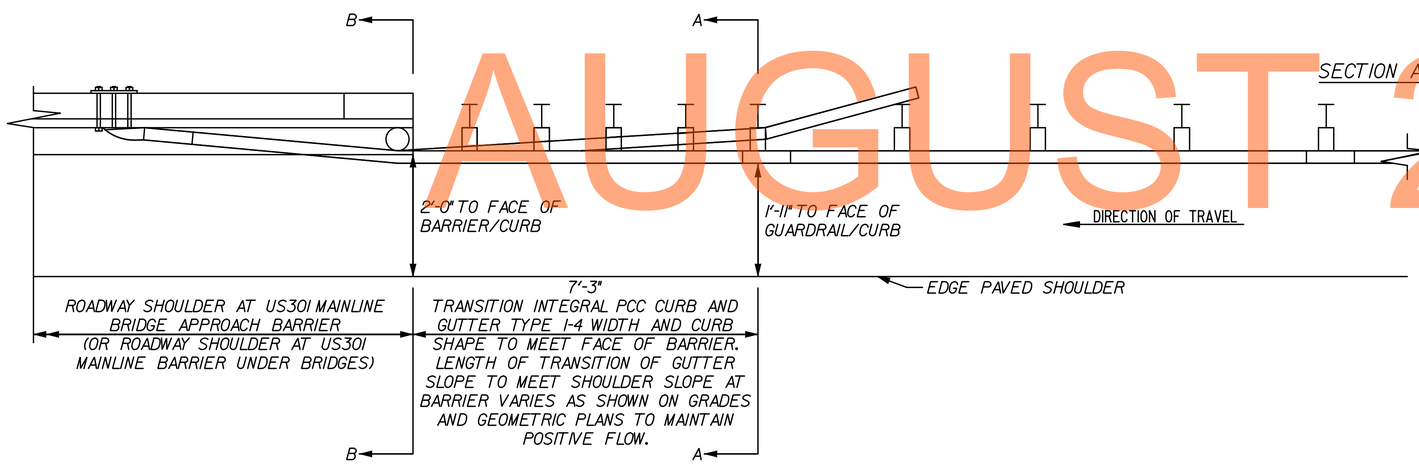

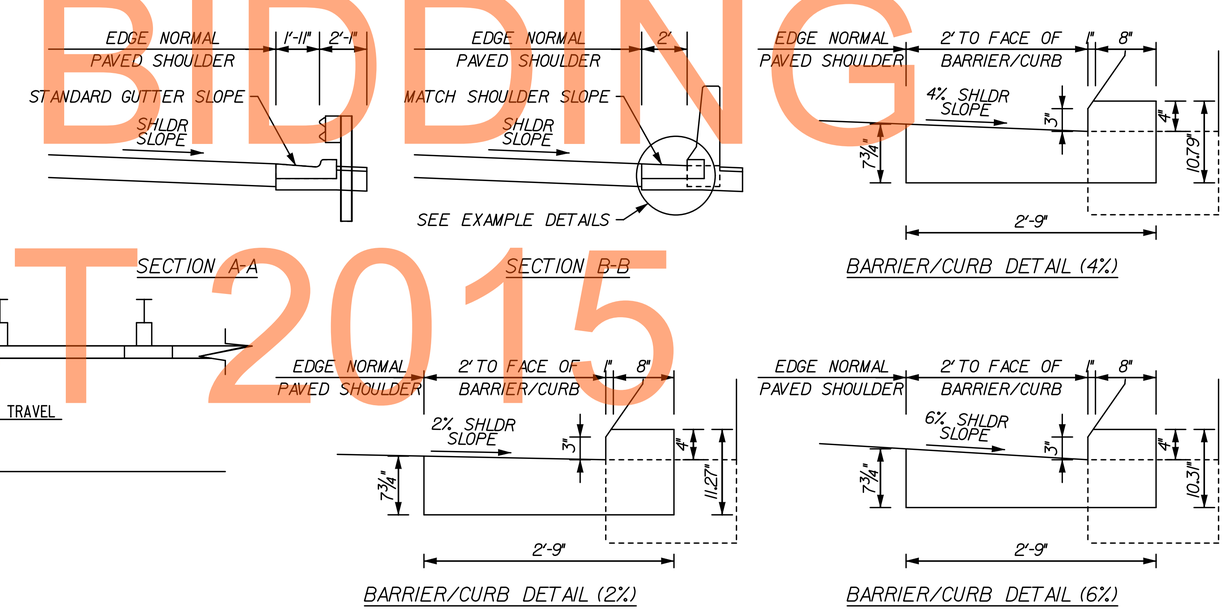

NOTES:

1. PLACE PREFORMED EXPANSION JOINT MATERIAL BETWEEN END OF CURB AND BARRIER PER SECTION 701.03.
2. TRANSITION LIMITS TO BE MEASURED FOR PAYMENT UNDER ITEM 701016 WITH ALL COSTS FOR TRANSITION INCLUDED IN ITEM 701016.

CURB TRANSITION DETAILS AT GUARDRAIL TO BARRIER CONNECTION (APPROACH TYPE 1)

NOT TO SCALE

DT-06

DELAWARE DEPARTMENT OF TRANSPORTATION	ADDENDUMS / REVISIONS	NOT TO SCALE	US 301, NORFOLK SOUTHERN RR TO SR 896	CONTRACT T200911301	BRIDGE NO.	CONSTRUCTION DETAILS	SHEET NO. 71
				COUNTY NEW CASTLE	DESIGNED BY: WJD		TOTAL SHTS. 240
					CHECKED BY: MAA		

$DATE$

$FILE$

INDEX OF SHEETS PIPE CULVERT AT STA 605+17.10		
SHEET NO.	DWG. NO.	TITLE
72	DT-07	SITE PLAN AND ELEVATION
73	DT-08	STAKE OUT PLAN AND INLET PLAN AND ELEVATION
74	DT-09	STAKE OUT PLAN AND OUTLET PLAN AND ELEVATION
75	DT-10	INLET AND OUTLET WALL SECTIONS
76	DT-11	REINFORCEMENT BAR LIST (1 OF 2)
77	DT-12	REINFORCEMENT BAR LIST (2 OF 2)

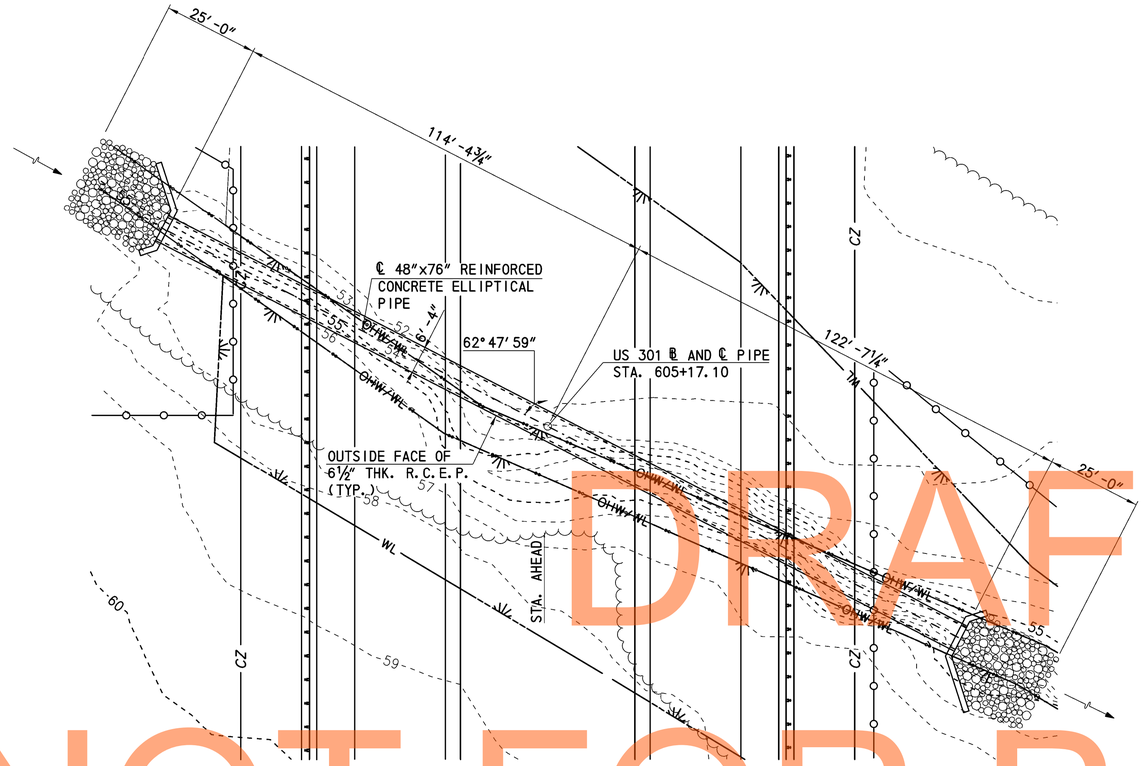

PLAN
SCALE: 1"=20'

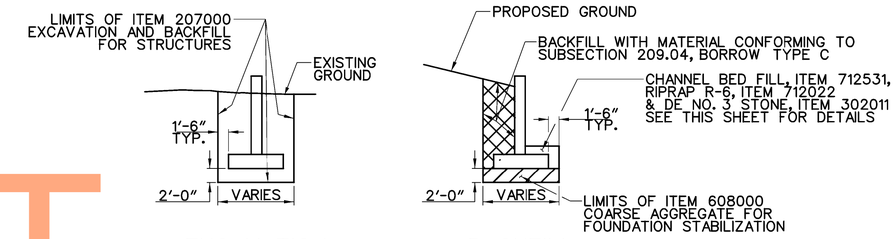

EXCAVATION

BACKFILL

NOTES:

1. BELOW ORDINARY HIGH WATER LINE:
   RIPRAP PER PLANS. PLACE TOP OF RIPRAP TO MATCH INVERT OF PIPE. CHOKE RIPRAP VOIDS WITH BORROW , TYPE B. PLACE CHANNEL BED FILL TO MATCH CHANNEL BED ELEVATIONS.
2. ABOVE ORDINARY HIGH WATER LINE:
   RIPRAP PER PLANS. CHOKE RIPRAP VOIDS WITH ITEM 302012-DELAWARE NO. 57 STONE. FILL REMAINING VOIDS WITH TOPSOIL SO THAT THE RIPRAP IS BARELY VISIBLE. REGARDLESS OF DEPTH, THIS SHALL BE PAID FOR UNDER ITEM 733001-TOPSOILING, 4" DEPTH.
3. SEE ENVIRONMENTAL COMPLIANCE SHEETS FOR ADDITIONAL DETAILS.

HYDRAULIC DATA

DRAINAGE AREA = 0.067 SQUARE MILES
50 YEAR FLOOD ELEVATION = 57.42
50 YEAR DESIGN DISCHARGE = 122.00 C.F.S.
VELOCITY AT Q 50 = 6.70 F.P.S.
100 YEAR FLOOD ELEVATION = 58.66
100 YEAR DESIGN DISCHARGE = 149.00 C.F.S.
VELOCITY AT Q 100 = 8.10 F.P.S.
PROPOSED OPENING = 18.31 S.F.

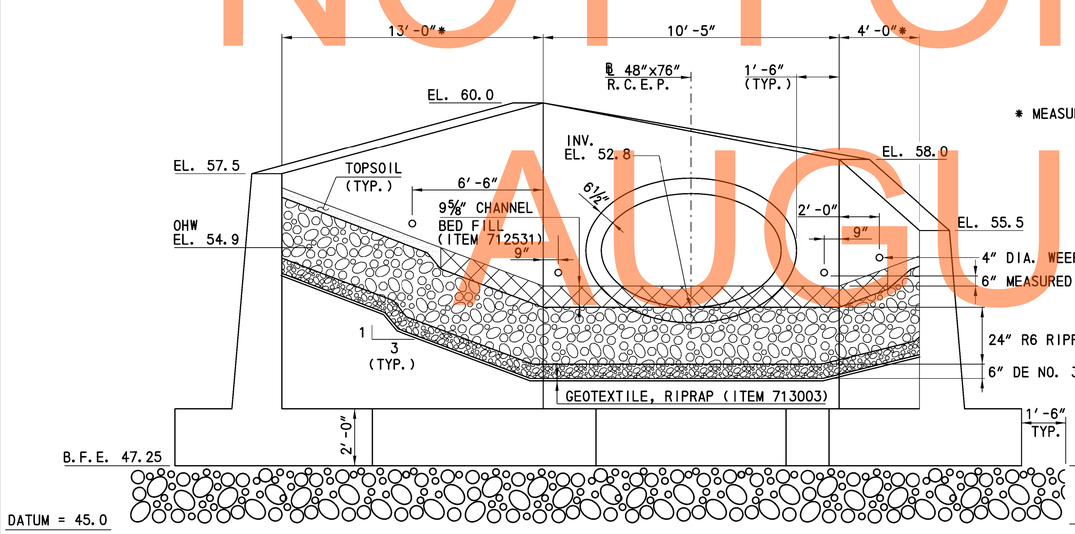

* MEASURED ALONG FRONT FACE.

INLET ELEVATION
SCALE: ⅜"=1'-0"

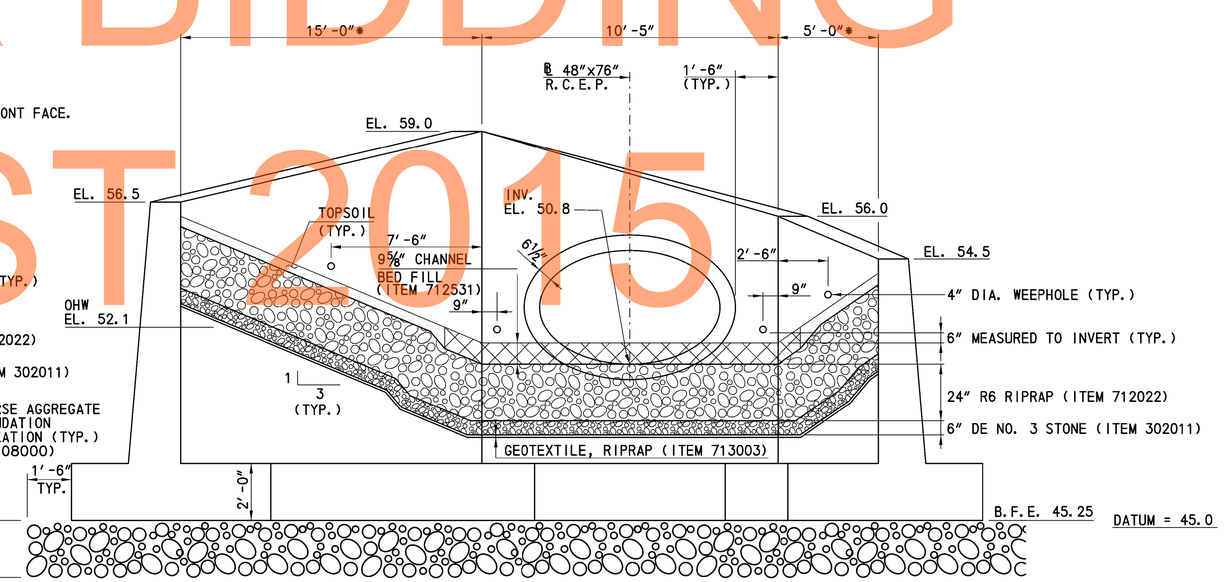

OUTLET ELEVATION
SCALE: ⅜"=1'-0"

DRAFT
NOT FOR BIDDING
AUGUST 2015

DELAWARE DEPARTMENT OF TRANSPORTATION	ADDENDUMS / REVISIONS	SCALE: AS NOTED	US 301, NORFOLK SOUTHERN RR TO SR 896	CONTRACT T200911301 / COUNTY NEW CASTLE	BRIDGE NO. / DESIGNED BY: CCJ / CHECKED BY: JFM	SITE PLAN AND ELEV. PIPE CULVERT STA. 605+17.10	DT-07 / SHEET NO. 72 / TOTAL SHTS. 240

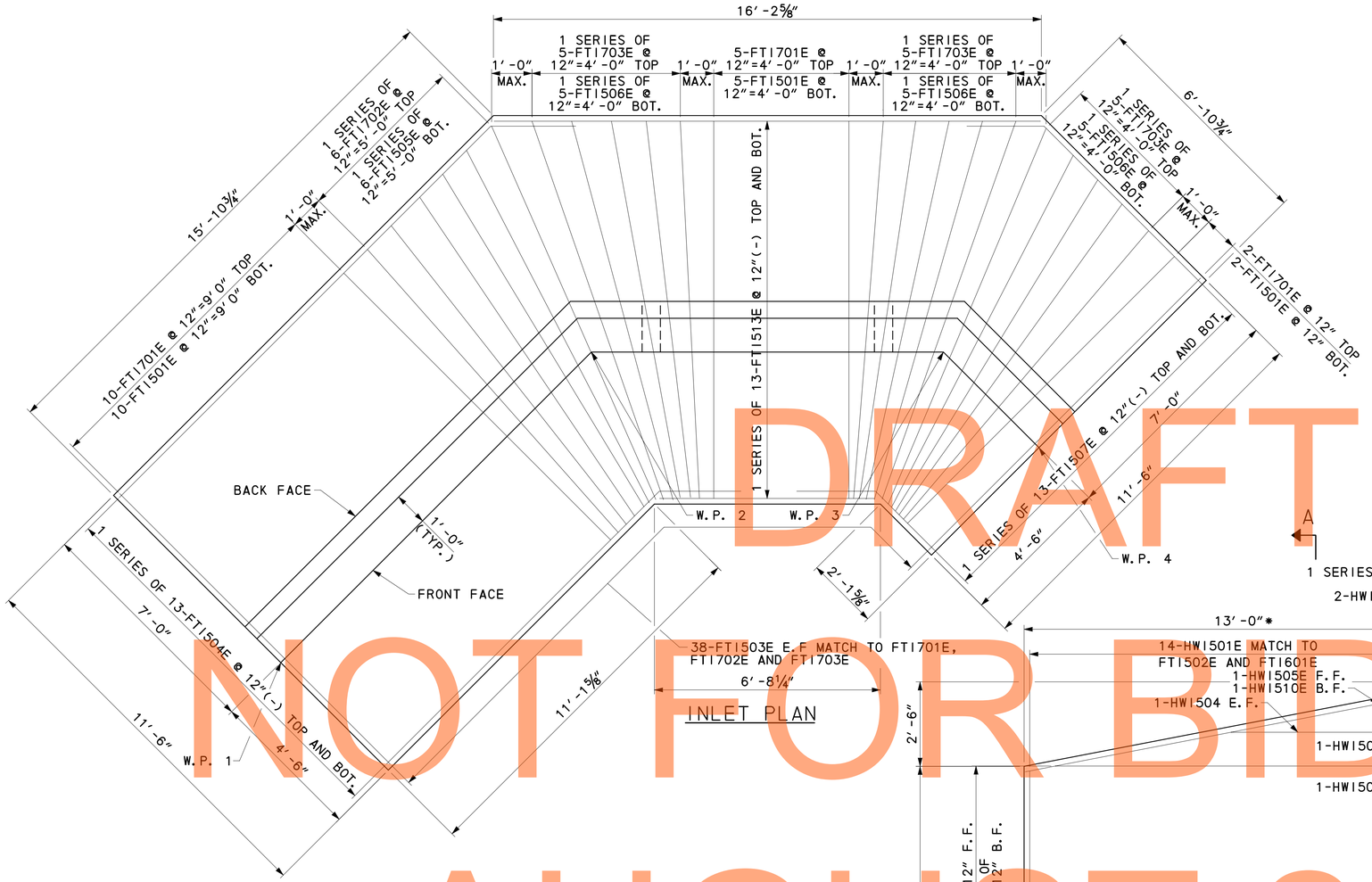

INLET PLAN

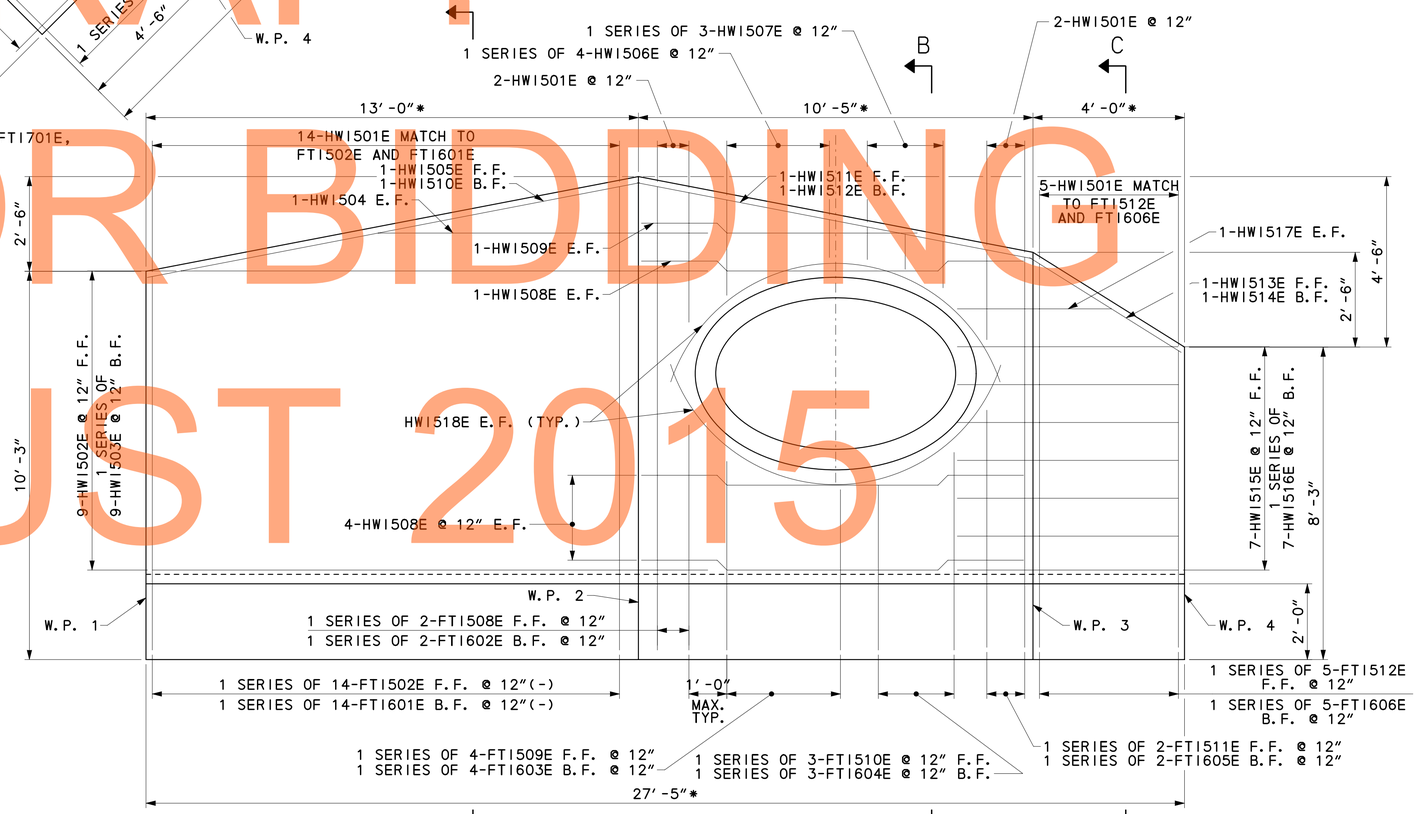

INLET ELEVATION
(LOOKING SOUTH)
(BARS IN FOOTING NOT EXTENDING INTO STEM NOT SHOWN FOR CLARITY)

NOTES

1. VERTICAL WALL REINFORCING IN FOOTING PLAN NOT SHOWN FOR CLARITY.
2. FOR SECTIONS A-A, B-B, AND C-C, SEE SHEET DT-08.
3. FIELD BEND BARS TO AVOID R.C.E.P. AS REQUIRED
4. FOR WEEP HOLE LOCATIONS, SEE SHEET DT-05.
5. STEM CONCRETE SHALL BE CLASS A CONCRETE AND FOOTING CONCRETE SHALL BE CLASS B CONCRETE.

WORK POINT COORDINATES		
W.P.	℄ CONSTRUCTION US 301 MAINLINE	
	STATION	OFFSET
1	605+86.40	103.34′L
2	605.74.02	99.37′L
3	605+64.75	104.13′L
4	605.63.53	107.94′L

* MEASURED ALONG FRONT FACE

NOT FOR BIDDING
DRAFT
AUGUST 2015

DT-08

DELAWARE DEPARTMENT OF TRANSPORTATION

ADDENDUMS / REVISIONS

SCALE 0 2 4 6 FEET

US 301, NORFOLK SOUTHERN RR TO SR 896

CONTRACT T200911301 | COUNTY NEW CASTLE | BRIDGE NO. | DESIGNED BY: CCJ | CHECKED BY: JFM

STAKE OUT PLAN AND INLET PLAN AND ELEV.

SHEET NO. 73 | TOTAL SHTS. 240

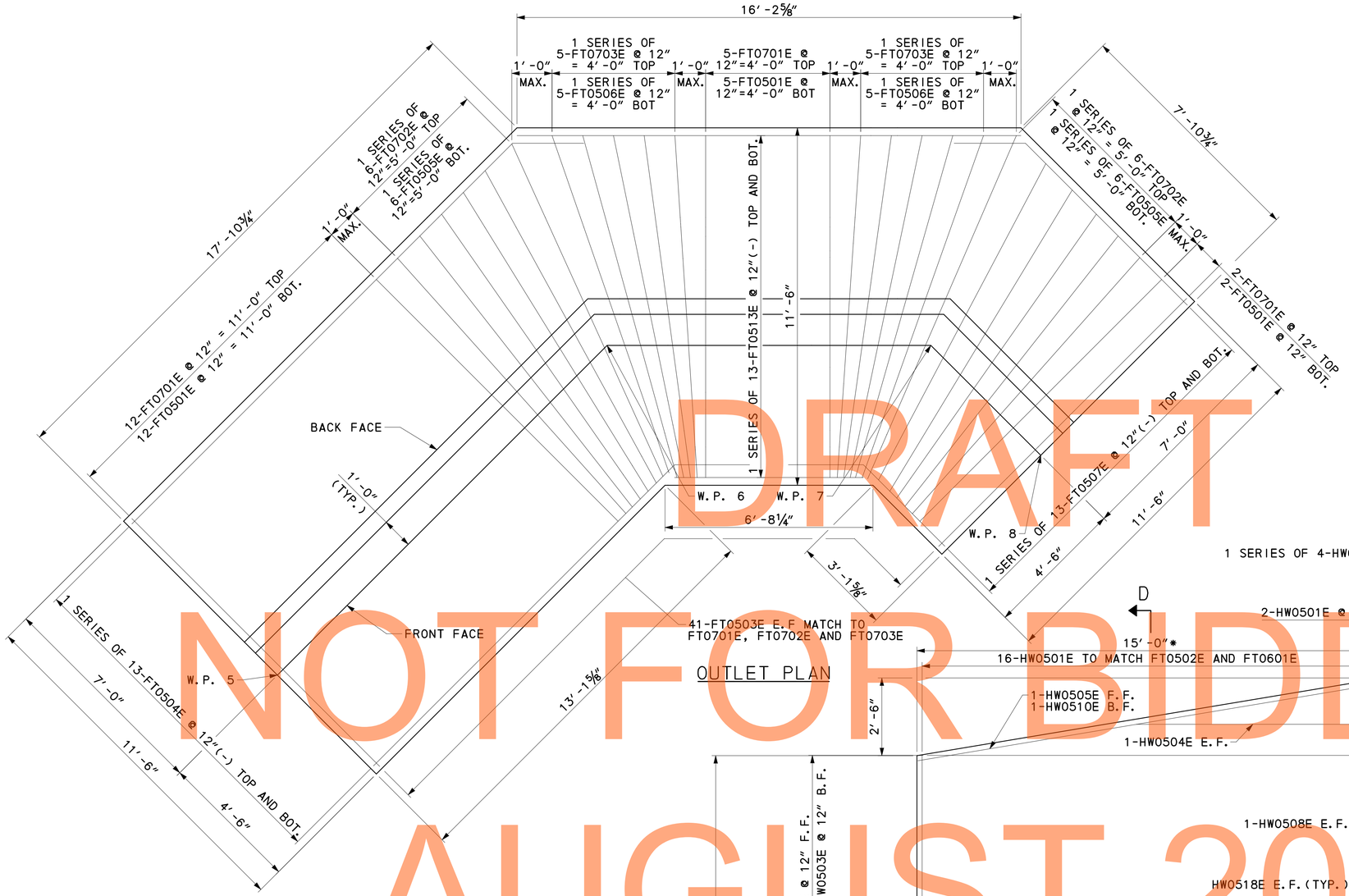

OUTLET PLAN

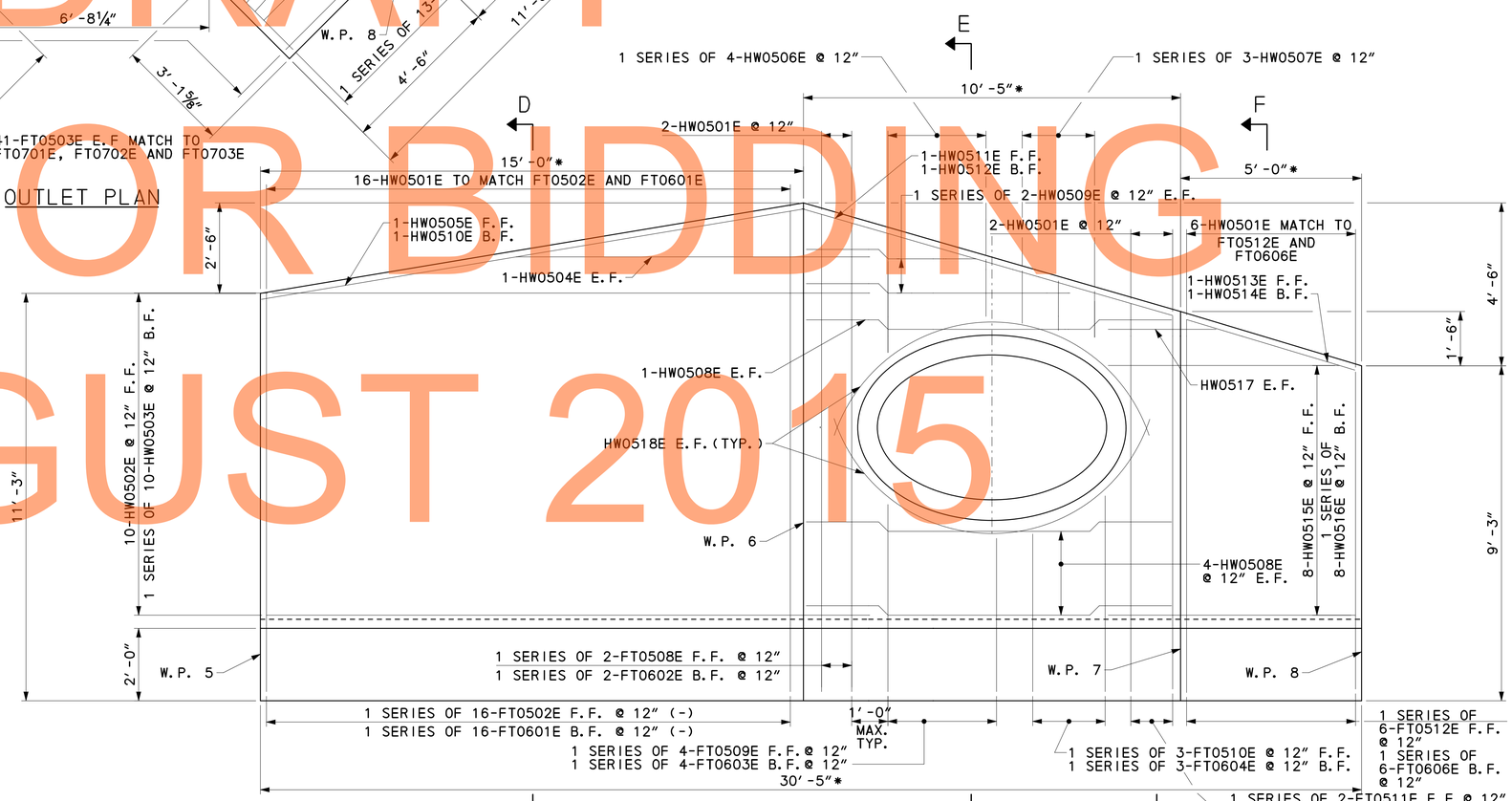

OUTLET ELEVATION

(LOOKING NORTH)(BARS IN FOOTING NOT EXTENDING INTO STEM NOT SHOWN FOR CLARITY)

WORK POINT COORDINATES		
W.P.	℄ CONSTRUCTION US 301 MAINLINE	
	STATION	OFFSET
5	604+42.04	111.20′R
6	604+56.32	106.62′R
7	604+65.59	111.38′R
8	604+67.12	116.14′R

* - MEASURED ALONG FRONT FACE

NOTES

1. VERTICAL WALL REINFORCING IN FOOTING PLAN NOT SHOWN FOR CLARITY.
2. FOR SECTIONS D-D, E-E, AND F-F, SEE SHEET DT-08.
3. FIELD BEND BARS TO AVOID R.C.E.P. AS REQUIRED
4. FOR WEEP HOLE LOCATIONS, SEE SHEET DT-05.
5. STEM CONCRETE SHALL BE CLASS A CONCRETE AND FOOTING CONCRETE SHALL BE CLASS B CONCRETE.

DRAFT
NOT FOR BIDDING
AUGUST 2015

DELAWARE DEPARTMENT OF TRANSPORTATION

ADDENDUMS / REVISIONS

SCALE 0 2 4 6 FEET

US 301, NORFOLK SOUTHERN RR TO SR 896

CONTRACT	BRIDGE NO.
T200911301	DESIGNED BY: CCJ
COUNTY	CHECKED BY: JFM
NEW CASTLE	

STAKE OUT PLAN AND OUTLET PLAN AND ELEV.

DT-09

SHEET NO. 74

TOTAL SHTS. 240

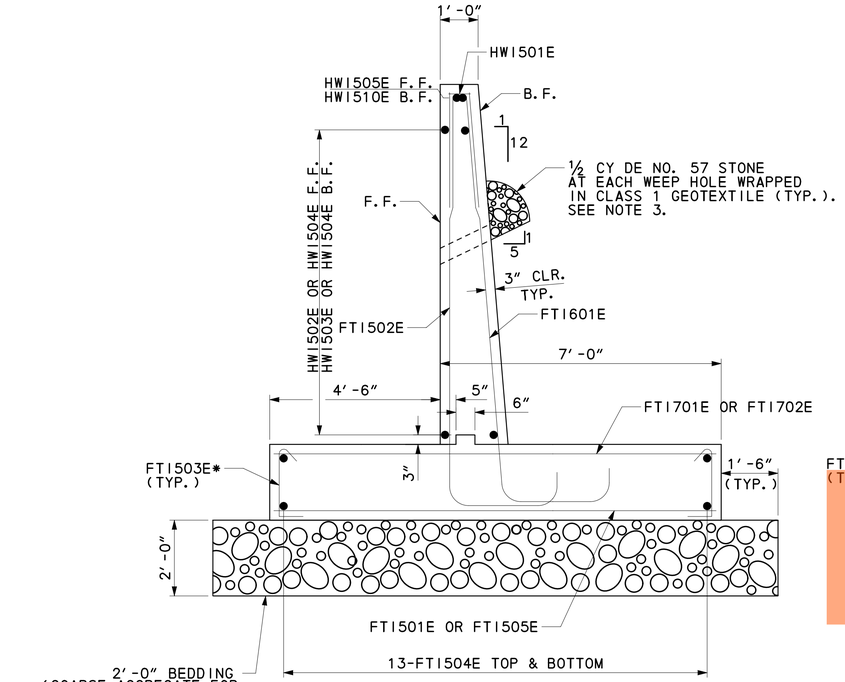

SECTION A-A

THE DETAILS SHOWN IN SECTION A-A THAT ARE NOT SHOWN IN OTHER SECTIONS ON SHEET ARE TYP. UNLESS NOTED OTHERWISE

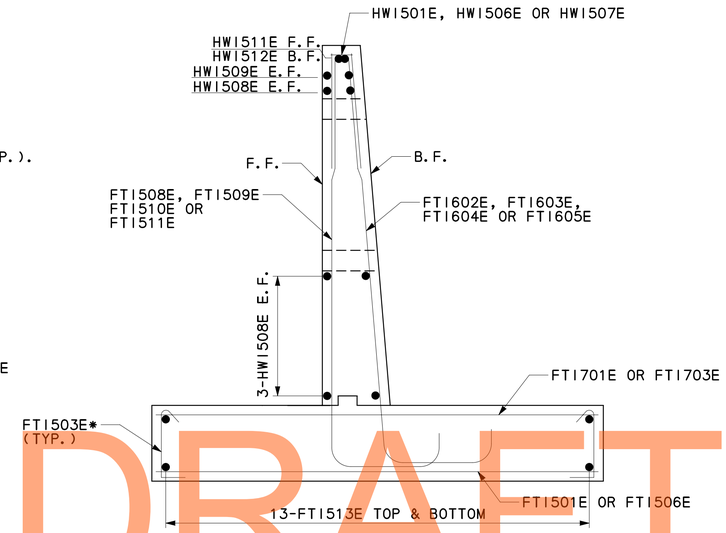

SECTION B-B

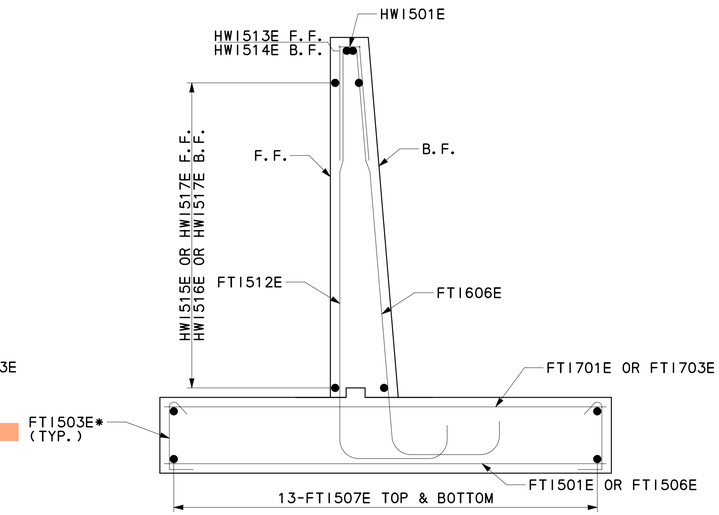

SECTION C-C

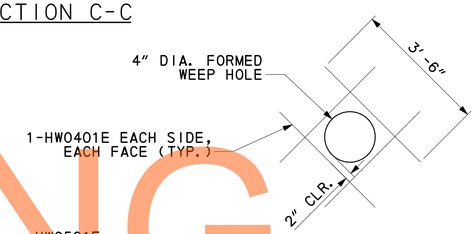

WEEP HOLE REINFORCEMENT DETAIL

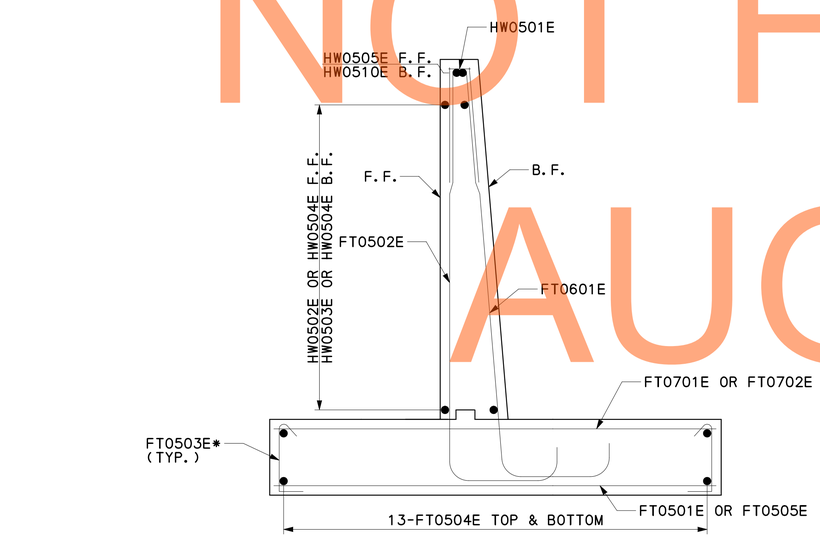

SECTION D-D

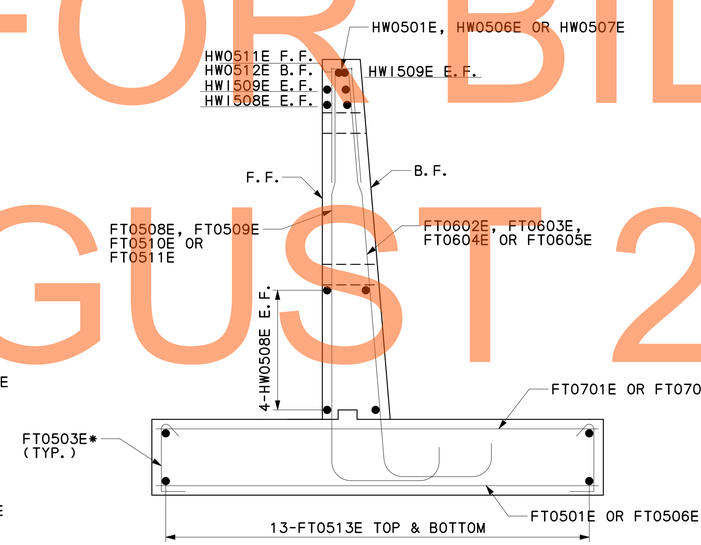

SECTION E-E

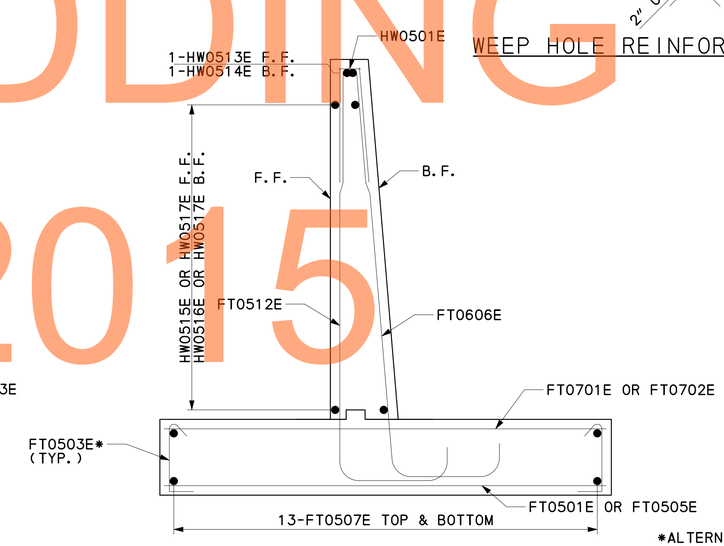

SECTION F-F

*ALTERNATE 135° HOOK UP AND DOWN BETWEEN THE TOP AND BOT. MATS OF REINFORCING

NOTES

1. FOR SECTION LOCATIONS SEE SHEETS DT-06 AND DT-07.
2. FOR WEEP HOLE LOCATIONS, SEE SHEET DT-05.
3. COST FOR CLASS 1 GEOTEXTILE INCIDENTAL TO COST FOR DE NO. 57 STONE.

DRAFT
NOT FOR BIDDING
AUGUST 2015

DT-10

DELAWARE DEPARTMENT OF TRANSPORTATION	ADDENDUMS / REVISIONS	SCALE 0 2 4 6 FEET	US 301, NORFOLK SOUTHERN RR TO SR 896	CONTRACT T200911301 / COUNTY NEW CASTLE	BRIDGE NO. / DESIGNED BY: CCJ / CHECKED BY: JFM	INLET AND OUTLET WALL SECTIONS

SHEET NO. 75
TOTAL SHTS. 240

(1) ANY MARK NUMBER WITH SUFFIX 'E' DENOTES EPOXY COATED REINFORCING STEEL.

(2) ALL MARK 'LOCATION PREFIXES' SHALL CONSIST OF TWO LETTERS AND ARE AS FOLLOWS: AB = ABUTMENT, AS = APPROACH SLAB, BC = BOX CULVERT, BW = BACKWALL, CL = COLUMN, DK = DECK, DL = DOWEL, FT = FOOTING, HW = HEADWALL, MS = MISC. BARS, PA = PARAPET, PR = PIER, SC = SHEETPILE CAP, SL = SLAB, TW = TOEWALL, WL = WALL (UNIQUE LOCATION), WW = WINGWALL

	SPECIFICATIONS					BENDING DIMENSIONS (FEET-INCHES /QUARTER INCH)										
	QTY.	SIZE	LENGTH	MARK	TYPE	A	B	C	D	E	F/R	G	H	J	K	O
FOOTING	17	5	11-00	FT1501E	STR		11-00									
	1X14	5	11-110	FT1502E	17		0-100	1-30	9-100							
			T0				T0	T0	T0							
			14-30				0-100	1-30	12-20							
	76	5	2-52	FT1503E	T9	0-52	1-60					0-60				
	2X13	5	13-70	FT1504E	16			11-20	2-50				1-82		1-82	12-102
			T0			T0	T0	T0	T0				T0		T0	T0
			18-20					15-90	2-50				1-82		1-82	17-52
	1X6	5	11-00	FT1505E	STR		11-00									
			T0				T0									
			11-100				11-100									
	3X5	5	11-00	FT1506E	STR		11-00									
			T0				T0									
			11-90				11-90									
	2X13	5	4-50	FT1507E	16			2-00	2-50				1-82		1-82	3-82
			T0			T0	T0	T0	T0				T0		T0	T0
			8-110					6-60	2-50				1-82		1-82	8-22
	1X2	5	14-00	FT1508E	17		0-100	1-30	11-110							
			T0				T0	T0	T0							
			14-30				0-100	1-30	12-20							
	1X4	5	6-80	FT1509E	17		0-100	1-30	4-70							
			T0				T0	T0	T0							
			7-70				0-100	1-30	5-60							
	1X3	5	6-90	FT1510E	17		0-100	1-30	4-80							
			T0				T0	T0	T0							
			7-70				0-100	1-30	5-60							
	1X2	5	12-50	FT1511E	17		0-100	1-30	10-40							
			T0				T0	T0	T0							
			12-70				0-100	1-30	10-60							
	1X5	5	12-40	FT1512E	17		0-100	1-30	10-30							
			T0				T0	T0	T0							
			9-110				0-100	1-30	7-100							
	2X13	5	6-80	FT1513E	STR		6-80									
			T0				T0									
			16-20				16-20									
	1X14	6	12-32	FT1601E	16		1-00	1-50	9-102				9-100		0-100	2-30
			T0			T0	T0	T0	T0				T0		T0	T0
			14-72				1-00	1-50	12-22				12-20		1-00	2-50
	1X2	6	14-42	FT1602E	16		1-00	1-50	11-112				11-110		1-00	2-50

	SPECIFICATIONS					BENDING DIMENSIONS (FEET-INCHES /QUARTER INCH)										
	QTY.	SIZE	LENGTH	MARK	TYPE	A	B	C	D	E	F/R	G	H	J	K	O
FOOTING CONTINUED			T0			T0	T0	T0	T0				T0		T0	T0
			14-72				1-00	1-50	12-22				12-20		1-00	2-50
	1X4	6	7-01	FT1603E	16		1-00	1-50	4-71				4-70		0-50	1-100
			T0			T0	T0	T0	T0				T0		T0	T0
			7-111				1-00	1-50	5-61				5-60		0-60	1-100
	1X3	6	7-11	FT1604E	16		1-00	1-50	4-81				4-80		0-50	1-100
			T0			T0	T0	T0	T0				T0		T0	T0
			7-111				1-00	1-50	5-61				5-60		0-60	1-100
	1X2	6	12-92	FT1605E	16		1-00	1-50	10-42				10-40		0-100	2-30
			T0			T0	T0	T0	T0				T0		T0	T0
			12-112				1-00	1-50	10-62				10-60		0-110	2-30
	1X5	6	10-31	FT1606E	16		1-00	1-50	7-101				7-100		0-80	2-10
			T0			T0	T0	T0	T0				T0		T0	T0
			12-81				1-00	1-50	10-31				10-30		0-100	2-10
	17	7	11-00	FT1701E	STR		11-00									
	1X6	7	11-00	FT1702E	STR		11-00									
			T0				T0									
			11-100				11-100									
	3X5	7	11-00	FT1703E	STR		11-00									
			T0				T0									
			11-90				11-90									
HEADWALL	16	4	3-60		STR		3-60									
	23	5	5-40	HW1501E	16		2-40	0-80	2-40				2-40		0-20	0-100
	9	5	15-33	HW1502E	16			12-100	2-53				1-90		1-90	14-70
	1X9	5	16-03	HW1503E	16			13-00	3-03				2-20		2-20	15-20
			T0			T0	T0	T0	T0				T0		T0	T0
			16-53					13-50	3-03				2-20		2-20	15-70
	2	5	8-93	HW1504E	16			6-40	2-53				1-90		1-90	8-10
	1	5	12-100	HW1505E	STR		12-100									
	1X4	5	6-21	HW1506E	16		2-90	0-80	2-91				2-90		0-30	0-110
			T0			T0	T0	T0	T0				T0		T0	T0
			3-41				1-40	0-80	1-41				1-40		0-10	0-110
	1X3	5	2-100	HW1507E	16		1-10	0-80	1-10				1-10		0-10	0-90
			T0			T0	T0	T0	T0				T0		T0	T0
			4-40				1-100	0-80	1-100				1-100		0-20	0-90
	10	5	10-00	HW1508E	STR		10-00									
	2	5	6-100	HW1509E	STR		6-100									
	1	5	13-20	HW1510E	STR		13-20									

	SPECIFICATIONS					BENDING DIMENSIONS (FEET-INCHES /QUARTER INCH)										
	QTY.	SIZE	LENGTH	MARK	TYPE	A	B	C	D	E	F/R	G	H	J	K	O
HEADWALL CONTINUED	1	5	10-40	HW1511E	STR		10-40									
	1	5	11-10	HW1512E	STR		11-10									
	1	5	4-40	HW1513E	STR		4-40									
	1	5	4-80	HW1514E	STR		4-80									
	7	5	6-33	HW1515E	16			3-100	2-53				1-90		1-90	5-70
	1X7	5	7-33	HW1516E	16			4-30	3-03				2-20		2-20	6-50
			T0			T0	T0	T0	T0				T0		T0	T0
			7-53					4-50	3-03				2-20		2-20	6-70
	2	5	4-53	HW1517E	16			2-00	2-53				1-90		1-90	3-90
	4	5	11-00	HW1518E	9		11-00				4-90		2-101			8-82

ASTM STANDARD ENGLISH REINFORCING BARS

BAR SIZE	NOMINAL DIMENSIONS: DIAMETER (INCHES)	AREA (INCHES²)	WEIGHT (LBS./FT.)	RECOMMENDED END HOOKS, APPLICABLE TO ALL GRADES: 180° HOOKS: D	180° HOOKS: A OR G	180° HOOKS: J	90° HOOKS: A OR G	STIRRUP AND TIE HOOKS, APPLICABLE TO ALL GRADES: D	90° HOOK: A OR G	135° HOOK: A OR G	135° HOOK: A OR G
3	0.375	0.110	0.376	2¼"	5"	3"	6"	1½"	4"	4"	2½"
4	0.500	0.200	0.668	3"	6"	4"	8"	2"	4½"	4½"	3"
5	0.625	0.310	1.043	3¾"	7"	5"	10"	2½"	6"	5½"	3¾"
6	0.750	0.440	1.502	4½"	8"	6"	1-0"	4½"	1-0"	8"	4½"
7	0.875	0.600	2.044	5¼"	10"	7"	1-2"	5¼"	1'-2"	9"	5¼"
8	1.000	0.790	2.670	6"	11"	8"	1-4"	6"	1-4"	10½"	6"
9	1.128	1.000	3.400	9½"	1-3"	11¾"	1-7"				
10	1.270	1.270	4.303	10¾"	1-5"	1-1¼"	1-10"				
11	1.410	1.560	5.313	1-0"	1-7"	1-2¾"	2-0"				
14	1.693	2.250	7.650	1-6¼"	2-3"	1-9¾"	2-7"				
18	2.257	4.000	13.600	2-0"	3-0"	2-4½"	3-5"				

NOTES:

1. FIGURES SHOWN IN CIRCLES REPRESENT BAR BEND TYPES.
2. STANDARD BAR BENDS INCLUDE ONLY THOSE TYPES BELOW, INDICATED AS SUCH.
3. ALL DIMENSIONS OUT-TO-OUT, EXCEPT "A" AND "G" ON STD. 180° AND 135° HOOKS.
4. "J" DIMENSIONS ON 180° HOOKS TO BE SHOWN ONLY WHERE NECESSARY TO RESTRICT HOOK SIZE, OTHERWISE STANDARD 'ACI' HOOKS ARE TO BE USED.
5. WHERE "J" IS NOT SHOWN, "J" WILL BE KEPT EQUAL TO OR LESS THAN "H" ON TYPES 3, 5 AND 22. WHERE "J" CAN EXCEED "H", IT SHALL BE SHOWN.
6. "H" DIMENSIONS OF STIRRUPS TO BE SHOWN AS NEEDED TO FIT WITHIN THE CONCRETE.
7. UNLESS OTHERWISE NOTED, DIAMETER "D" IS THE SAME FOR ALL BENDS AND HOOKS ON A BAR (EXCEPT FOR BEND TYPES 11 AND 13).
8. WHERE SLOPE DIFFERS FROM 45° OFFSET, "H" AND "K" MUST BE SHOWN.
9. WHERE BARS ARE TO BE BENT MORE ACCURATELY THAN STANDARD BENDING TOLERANCES, BENDING DIMENSIONS REQUIRING CLOSER FABRICATION SHOULD HAVE LIMITS INDICATED.
10. FOR RECOMMENDED DIAMETER "D", OF BENDS, HOOKS, ETC., REFER TO TABLE ABOVE, 'CRSI' OR 'ACI' TABLES WHERE APPLICABLE AND REQUIRED.
11. TYPE S1-S6, S11, T1-T3 AND T6-T9 APPLICABLE TO BAR SIZES #3 THROUGH #8.

STANDARD BAR BENDS

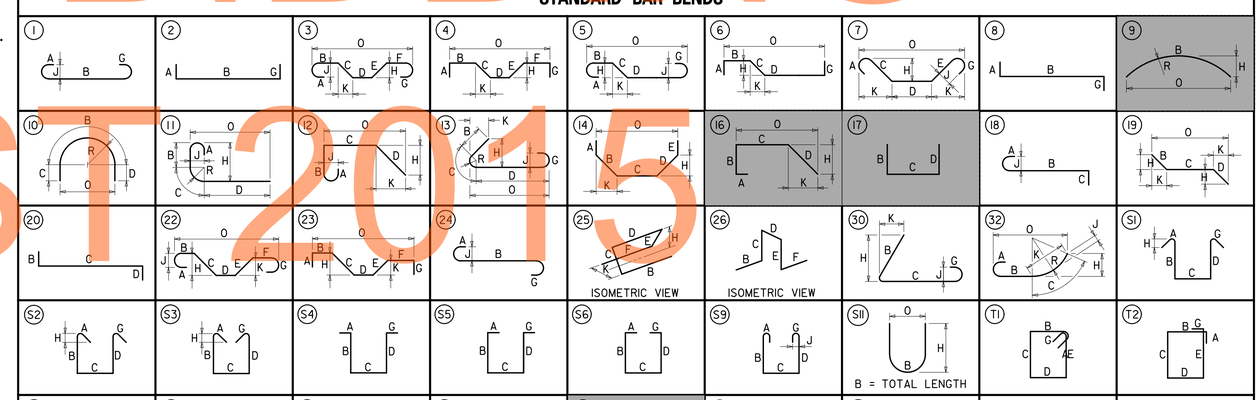

SPECIAL BAR BENDS

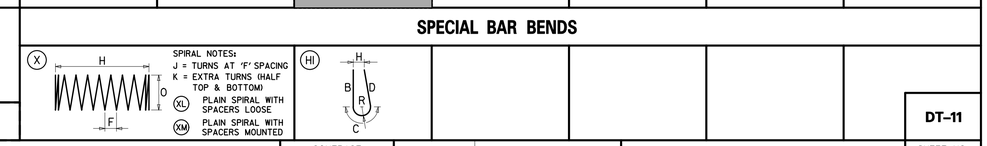

STIRRUP AND TIE HOOKS

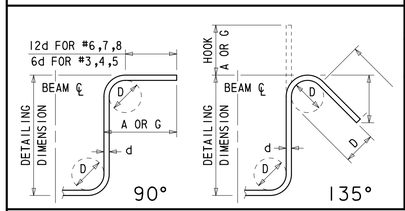

180° AND 90° END HOOKS

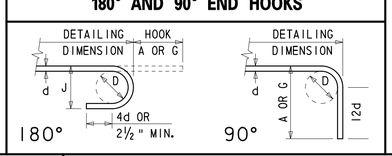

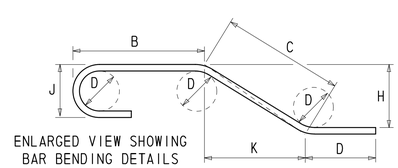

DELAWARE DEPARTMENT OF TRANSPORTATION

ADDENDUMS / REVISIONS

US 301, NORFOLK SOUTHERN RR TO SR 896

CONTRACT	BRIDGE NO.	REINFORCEMENT BAR LIST	SHEET NO.
T200911301			76
COUNTY	DESIGNED BY: CCJ		TOTAL SHTS.
NEW CASTLE	CHECKED BY: JFM		240

DT-11

DRAFT
NOT FOR BIDDING
AUGUST 2015

(1) ANY MARK NUMBER WITH SUFFIX 'E' DENOTES EPOXY COATED REINFORCING STEEL.

(2) ALL MARK 'LOCATION PREFIXES' SHALL CONSIST OF TWO LETTERS AND ARE AS FOLLOWS: AB = ABUTMENT, AS = APPROACH SLAB, BC = BOX CULVERT, BW = BACKWALL, CL = COLUMN, DK = DECK, DL = DOWEL, FT = FOOTING, HW = HEADWALL, MS = MISC. BARS, PA = PARAPET, PR = PIER, SC = SHEETPILE CAP, SL = SLAB, TW = TOEWALL, WL = WALL (UNIQUE LOCATION), WW = WINGWALL

FOOTING

SPECIFICATIONS					BENDING DIMENSIONS (FEET-INCHES /QUARTER INCH)										
QTY.	SIZE	LENGTH	MARK	TYPE	A	B	C	D	E	F/R	G	H	J	K	O
19	5	11-00	FT0501E	STR		11-00									
1X16	5	12-110	FT0502E	17		0-100	1-30	10-100							
		T0				T0	T0	T0							
		15-40				0-100	1-30	13-30							
82	5	2-52	FT0503E	T9	0-52	1-60					0-60				
2X13	5	15-50	FT0504E	16			13-00	2-50				1-82		1-82	14-82
		T0			T0	T0	T0	T0				T0		T0	T0
		20-10					17-80	2-50				1-82		1-82	19-42
2X6	5	11-00	FT0505E	STR		11-00									
		T0				T0									
		11-90				11-90									
2X5	5	11-00	FT0506E	STR		11-00									
		T0				T0									
		11-70				11-70									
2X13	5	5-50	FT0507E	16			3-00	2-50				1-82		1-82	4-82
		T0			T0	T0	T0	T0				T0		T0	T0
		9-110					7-60	2-50				1-82		1-82	9-22
1X2	5	15-00	FT0508E	17		0-100	1-30	12-110							
		T0				T0	T0	T0							
		15-30				0-100	1-30	13-20							
1X4	5	6-80	FT0509E	17		0-100	1-30	4-70							
		T0				T0	T0	T0							
		7-70				0-100	1-30	5-60							
1X3	5	6-90	FT0510E	17		0-100	1-30	4-80							
		T0				T0	T0	T0							
		7-70				0-100	1-30	5-60							
1X2	5	12-50	FT0511E	17		0-100	1-30	10-40							
		T0				T0	T0	T0							
		12-80				0-100	1-30	10-70							
1X6	5	12-50	FT0512E	17		0-100	1-30	10-40							
		T0				T0	T0	T0							
		10-110				0-100	1-30	8-100							
2X13	5	6-80	FT0513E	STR		6-80									
		T0				T0									
		16-20				16-20									
1X16	6	13-32	FT0601E	16		1-00	1-50	10-102				10-100		100	2-30
		T0			T0	T0	T0	T0				T0		T0	T0
		15-82				1-00	1-50	13-32				13-30		1-00	2-50
1X2	6	15-42	FT0602E	16		1-00	1-50	12-112				12-110		1-00	2-50

FOOTING CONTINUED

SPECIFICATIONS					BENDING DIMENSIONS (FEET-INCHES /QUARTER INCH)										
QTY.	SIZE	LENGTH	MARK	TYPE	A	B	C	D	E	F/R	G	H	J	K	O
		T0			T0	T0	T0	T0				T0		T0	T0
		15-72				1-00	1-50	13-22				13-20		1-00	2-50
1X4	6	7-01	FT0603E	16		1-00	1-50	4-71				4-70		0-50	1-100
		T0			T0	T0	T0	T0				T0		T0	T0
		7-111				1-00	1-50	5-61				5-60		0-60	1-100
1X3	6	7-11	FT0604E	16		1-00	1-50	4-81				4-80		0-50	1-100
		T0			T0	T0	T0	T0				T0		T0	T0
		7-111				1-00	1-50	5-61				5-60		0-60	1-100
1X2	6	12-92	FT0605E	16		1-00	1-50	10-42				10-40		0-100	2-30
		T0			T0	T0	T0	T0				T0		T0	T0
		13-02				1-00	1-50	10-72				10-70		0-110	2-30
1X6	6	11-31	FT0606E	16		1-00	1-50	8-101				8-100		0-80	2-10
		T0			T0	T0	T0	T0				T0		T0	T0
		12-91				1-00	1-50	10-41				10-40		0-100	2-10
19	7	11-00	FT0701E	STR		11-00									
2X6	7	11-00	FT0702E	STR		11-00									
		T0				T0									
		11-90				11-90									
2X5	7	11-00	FT0703E	STR		11-00									
		T0				T0									
		11-70				11-70									

HEADWALL

SPECIFICATIONS					BENDING DIMENSIONS (FEET-INCHES /QUARTER INCH)										
QTY.	SIZE	LENGTH	MARK	TYPE	A	B	C	D	E	F/R	G	H	J	K	O
16	4	3-60	HW0401E	STR		3-60									
26	5	5-40	HW0501E	16		2-40	0-80	2-40				2-40		0-20	0-100
10	5	17-33	HW0502E	16			14-100	2-53				1-90		1-90	16-70
1X10	5	18-13	HW0503E	16			15-10	3-03				2-20		2-20	17-30
		T0			T0	T0	T0	T0				T0		T0	T0
		18-83					15-80	3-03				2-20		2-20	17-100
2	5	9-93	HW0504E	16			7-40	2-53				1-90		1-90	9-10
1	5	14-100	HW0505E	STR		14-100									
1X4	5	7-60	HW0506E	16		3-50	0-80	3-50				3-50		0-30	0-110
		T0			T0	T0	T0	T0				T0		T0	T0
		4-61				1-110	0-80	1-111				1-110		0-20	0-110
1X3	5	4-00	HW0507E	16		1-80	0-80	1-80				1-80		0-10	0-90
		T0			T0	T0	T0	T0				T0		T0	T0
		4-60				1-110	0-80	1-110				1-110		0-20	0-90
10	5	10-00	HW0508E	STR		10-00									

HEADWALL CONTINUED

SPECIFICATIONS					BENDING DIMENSIONS (FEET-INCHES /QUARTER INCH)										
QTY.	SIZE	LENGTH	MARK	TYPE	A	B	C	D	E	F/R	G	H	J	K	O
2X2	5	4-90	HW0509E	STR		4-90									
		T0				T0									
		7-40				7-40									
1	5	15-30	HW0510E	STR		15-30									
1	5	10-70	HW0511E	STR		10-70									
1	5	11-30	HW0512E	STR		11-30									
1	5	5-30	HW0513E	STR		5-30									
1	5	5-70	HW0514E	STR		5-70									
8	5	7-33	HW0515E	16			4-100	2-53				1-90		1-90	6-70
1X8	5	7-103	HW0516E	16			4-100	3-03				2-20		2-20	7-00
		T0			T0	T0	T0	T0				T0		T0	T0
		8-53					5-50	3-03				2-20		2-20	7-70
2	5	3-53	HW0517E	16			1-00	2-53				1-90		1-90	2-90
4	5	11-00	HW0518E	9		11-00				4-90		2-101			8-82

DRAFT
NOT FOR BIDDING
AUGUST 2015

ASTM STANDARD ENGLISH REINFORCING BARS

BAR SIZE	NOMINAL DIMENSIONS: DIAMETER (INCHES)	AREA (INCHES²)	WEIGHT (LBS./FT.)	RECOMMENDED END HOOKS, APPLICABLE TO ALL GRADES: 180° HOOKS D	180° HOOKS A OR G	180° HOOKS J	90° HOOKS A OR G	STIRRUP AND TIE HOOKS, APPLICABLE TO ALL GRADES: D	90° HOOK A OR G	135° HOOK A OR G	135° HOOK A OR G
3	0.375	0.110	0.376	2¼"	5"	3"	6"	1½"	4"	4"	2½"
4	0.500	0.200	0.668	3"	6"	4"	8"	2"	4½"	4½"	3"
5	0.625	0.310	1.043	3¾"	7"	5"	10"	2½"	6"	5½"	3¾"
6	0.750	0.440	1.502	4½"	8"	6"	1-0"	4½"	1-0"	8"	4½"
7	0.875	0.600	2.044	5¼"	10"	7"	1-2"	5¼"	1'-2"	9"	5¼"
8	1.000	0.790	2.670	6"	11"	8"	1-4"	6"	1-4"	10½"	6"
9	1.128	1.000	3.400	9½"	1-3"	11¾"	1-7"				
10	1.270	1.270	4.303	10¾"	1-5"	1-1¼"	1-10"				
11	1.410	1.560	5.313	1-0"	1-7"	1-2¾"	2-0"				
14	1.693	2.250	7.650	1-6¼"	2-3"	1-9¾"	2-7"				
18	2.257	4.000	13.600	2-0"	3-0"	2-4½"	3-5"				

NOTES:

1. FIGURES SHOWN IN CIRCLES REPRESENT BAR BEND TYPES.
2. STANDARD BAR BENDS INCLUDE ONLY THOSE TYPES BELOW, INDICATED AS SUCH.
3. ALL DIMENSIONS OUT-TO-OUT, EXCEPT "A" AND "G" ON STD. 180° AND 135° HOOKS.
4. "J" DIMENSIONS ON 180° HOOKS TO BE SHOWN ONLY WHERE NECESSARY TO RESTRICT HOOK SIZE, OTHERWISE STANDARD 'ACI' HOOKS ARE TO BE USED.
5. WHERE "J" IS NOT SHOWN, "J" WILL BE KEPT EQUAL TO OR LESS THAN "H" ON TYPES 3, 5 AND 22. WHERE "J" CAN EXCEED "H", IT SHALL BE SHOWN.
6. "H" DIMENSIONS OF STIRRUPS TO BE SHOWN AS NEEDED TO FIT WITHIN THE CONCRETE.
7. UNLESS OTHERWISE NOTED, DIAMETER "D" IS THE SAME FOR ALL BENDS AND HOOKS ON A BAR (EXCEPT FOR BEND TYPES 11 AND 13).
8. WHERE SLOPE DIFFERS FROM 45° OFFSET, "H" AND "K" MUST BE SHOWN.
9. WHERE BARS ARE TO BE BENT MORE ACCURATELY THAN STANDARD BENDING TOLERANCES, BENDING DIMENSIONS REQUIRING CLOSER FABRICATION SHOULD HAVE LIMITS INDICATED.
10. FOR RECOMMENDED DIAMETER "D", OF BENDS, HOOKS, ETC., REFER TO TABLE ABOVE, 'CRSI' OR 'ACI' TABLES WHERE APPLICABLE AND REQUIRED.
11. TYPE S1-S6, S11, T1-T3 AND T6-T9 APPLICABLE TO BAR SIZES #3 THROUGH #8.

STANDARD BAR BENDS

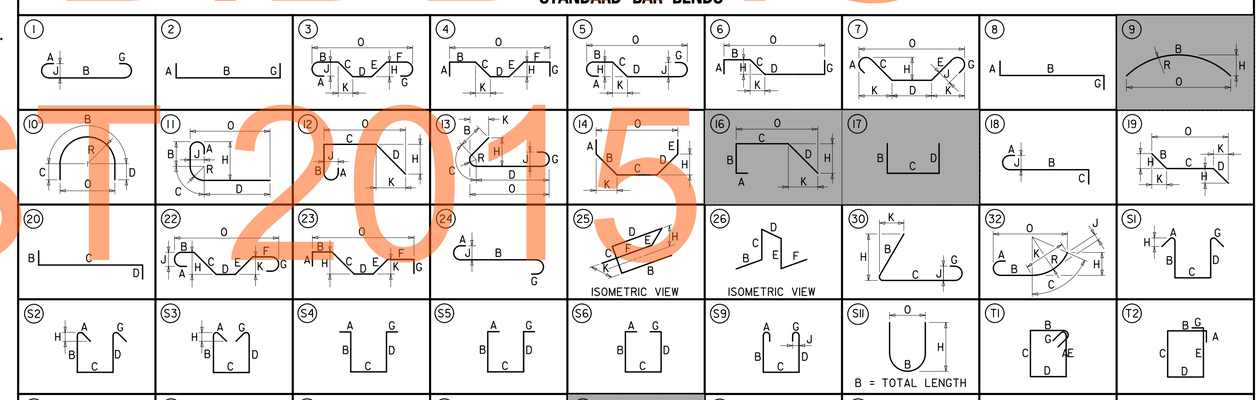

SPECIAL BAR BENDS

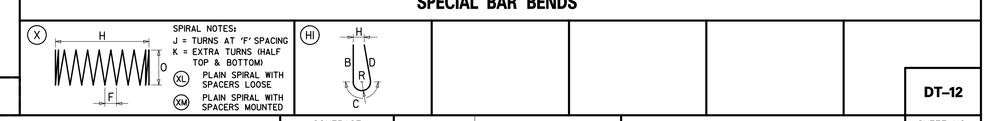

STIRRUP AND TIE HOOKS

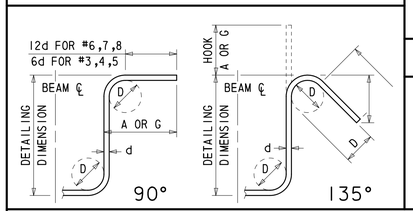

180° AND 90° END HOOKS

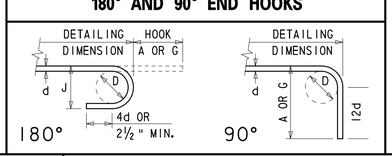

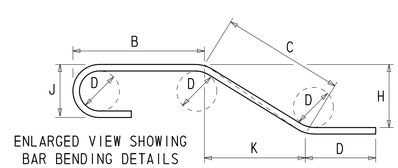

DELAWARE DEPARTMENT OF TRANSPORTATION

ADDENDUMS / REVISIONS

US 301, NORFOLK SOUTHERN RR TO SR 896

CONTRACT	BRIDGE NO.	REINFORCEMENT BAR LIST	SHEET NO.
T200911301			77
COUNTY	DESIGNED BY: CCJ		TOTAL SHTS.
NEW CASTLE	CHECKED BY: JFM		240

DT-12