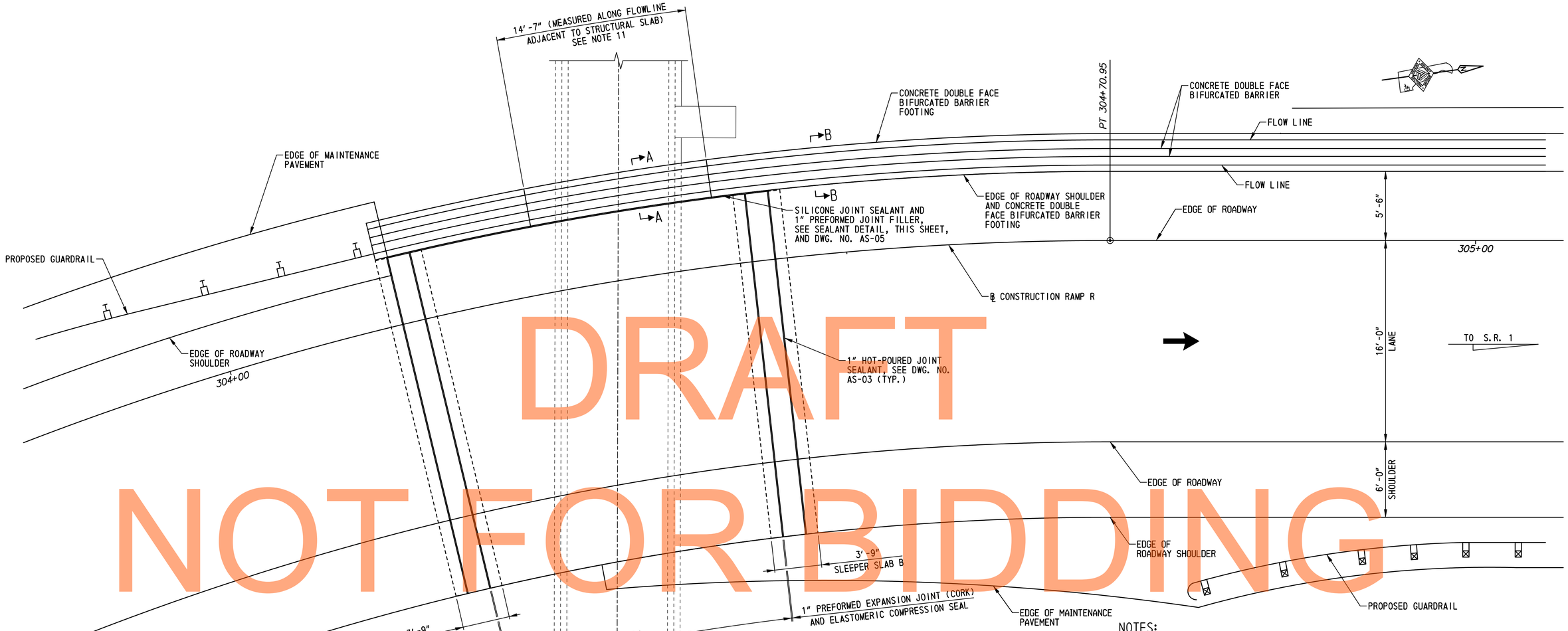

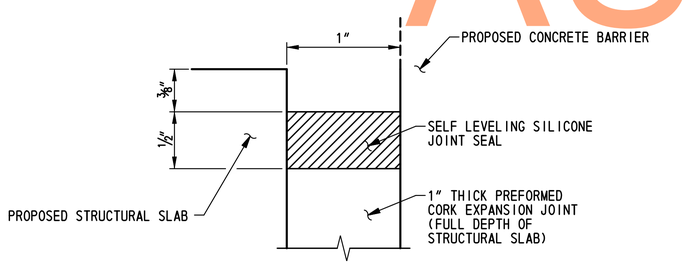

SEALANT DETAIL
LONGITUDINAL PREFORMED CORK JOINT
SCALE: NOT TO SCALE

PLAN
SCALE: 1/4"=1'-0"

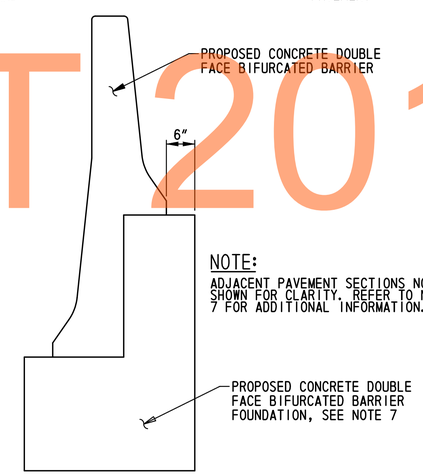

NOTE:
ADJACENT PAVEMENT SECTIONS NOT SHOWN FOR CLARITY. REFER TO NOTE 7 FOR ADDITIONAL INFORMATION.

SECTION B-B
LONGITUDINAL JOINT AT BIFURCATED BARRIER
SCALE: 3/4"=1'-0"

NOTES:

1. PAYMENT FOR EXCAVATION WILL BE MADE UNDER ITEM 207000 - EXCAVATION BACKFILL FOR STRUCTURES.
2. PAYMENT FOR CONSTRUCTION OF STRUCTURAL SLAB AND SLEEPER SLABS WILL BE MADE UNDER ITEM 602001 - PORTLAND CEMENT CONCRETE MASONRY, CLASS A. PAYMENT FOR BOND BREAKER WILL BE INCIDENTAL TO THIS ITEM. ANGLES AND STUDS AT APPROACH PAVEMENT EDGE OF SLEEPER SLABS SHALL BE INCIDENTAL TO THIS ITEM.
3. PAYMENT FOR EPOXY COATED REINFORCEMENT WILL BE MADE UNDER ITEM 604000 - BAR REINFORCEMENT, EPOXY COATED.
4. PAYMENT FOR PREFORMED EXPANSION JOINT (CORK) AND ELASTOMERIC COMPRESSION SEAL BETWEEN STRUCTURAL SLAB AND SLEEPER SLABS WILL BE MADE UNDER ITEM 605730 - PREFABRICATED EXPANSION JOINT SYSTEM, 1". PAYMENT FOR ANGLES AND STUDS ADJACENT TO THESE JOINTS BETWEEN THE STRUCTURAL SLAB AND SLEEPER SLABS WILL BE INCIDENTAL TO THIS ITEM.
5. PAYMENT FOR DELAWARE NO. 57 STONE WILL BE MADE UNDER ITEM 302012 - DELAWARE NO. 57 STONE.
6. TOLERANCE ON ALL JOINT SEALANT DETAIL DIMENSIONS SHOWN WITHOUT RANGES SHALL BE PLUS 1/16", MINUS 0".
7. FOR CONCRETE DOUBLE-FACE BIFURCATED BARRIER AND ADJACENT JOINT DETAILS AND PAYMENT INFORMATION, SEE DWG. NO. DT-04.
8. FOR PAVEMENT JOINT LAYOUT DETAILS, SEE DWG. NOS. EX-01, EX-02 AND EX-03.
9. FOR HORIZONTAL AND VERTICAL GEOMETRY, SEE DWG. NO. HV-02.
10. FOR SECTION A-A, SEE DWG. NO. AS-05.
11. FOR MODIFIED CONCRETE BARRIER AT EXISTING TUNNEL, SEE DWG. NO. AS-05.
12. SELF-LEVELING SILICONE JOINT SEALANT SHALL BE OF TYPE SL IN ACCORDANCE WITH ASTM D5893.
13. PAYMENT FOR 1" SILICONE JOINT SEALANT AND PREFORMED JOINT FILLER BETWEEN STRUCTURAL SLAB AND CONCRETE DOUBLE-FACE BIFURCATED BARRIER SHALL BE INCIDENTAL TO ITEM 602001 - PORTLAND CEMENT CONCRETE MASONRY, CLASS A.

DRAFT
NOT FOR BIDDING
AUGUST 2012

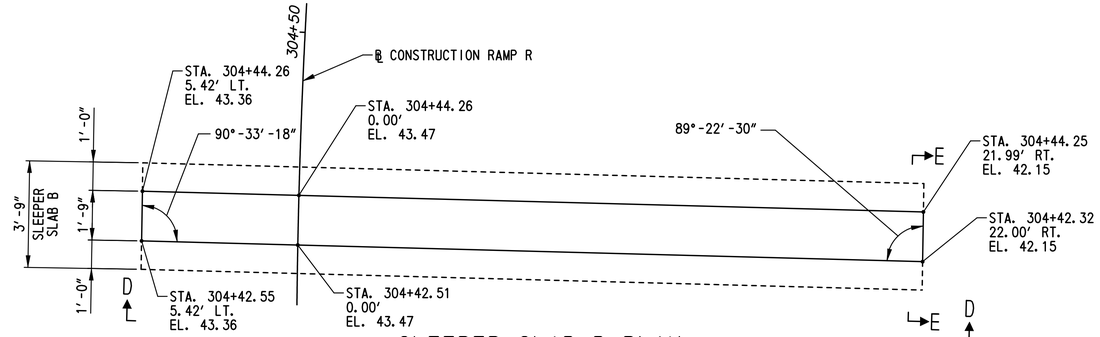

SLEEPER SLAB B PLAN

SCALE: 3/8"=1'-0"

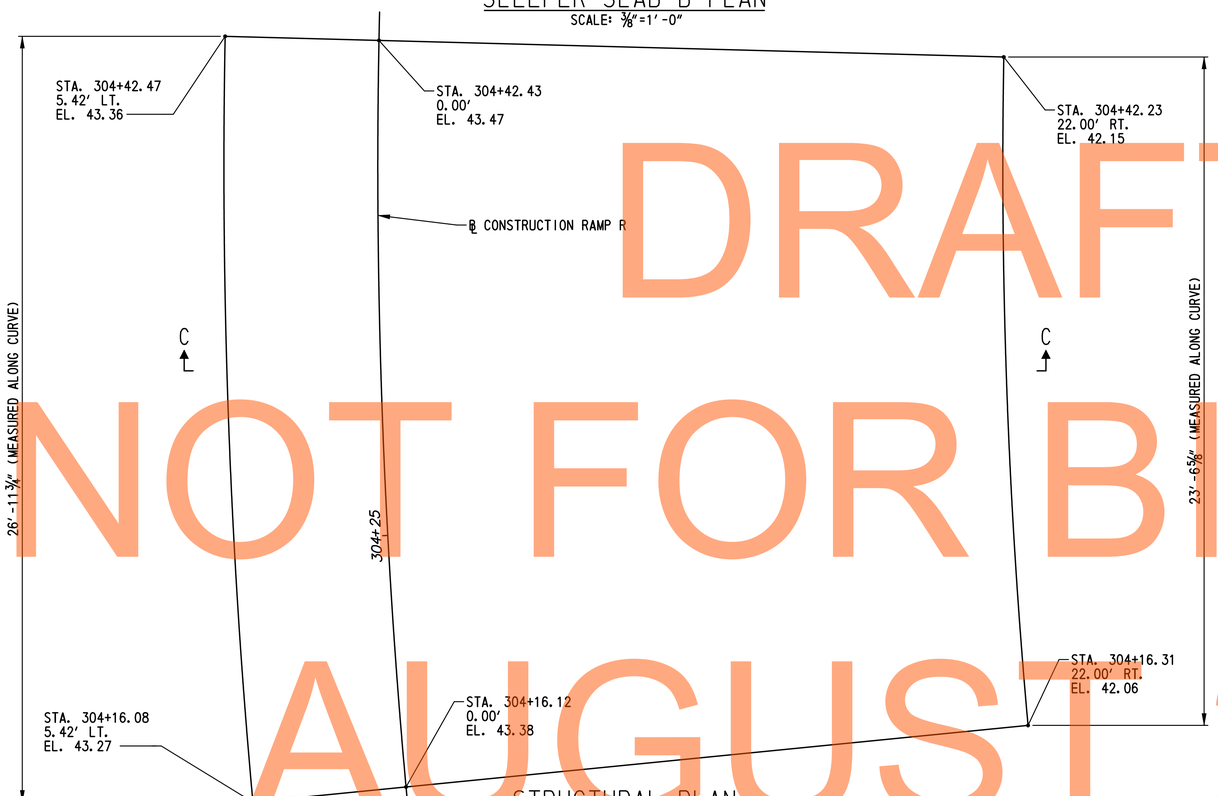

STRUCTURAL PLAN

SCALE: 3/8"=1'-0"

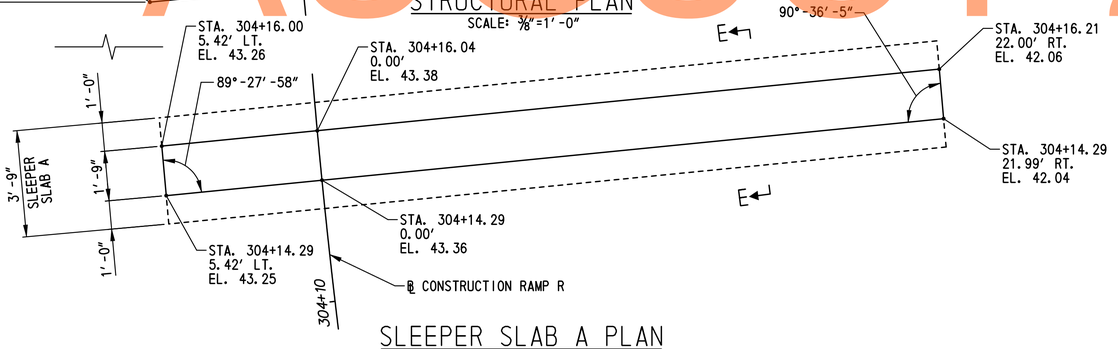

SLEEPER SLAB A PLAN

SCALE: 3/8"=1'-0"

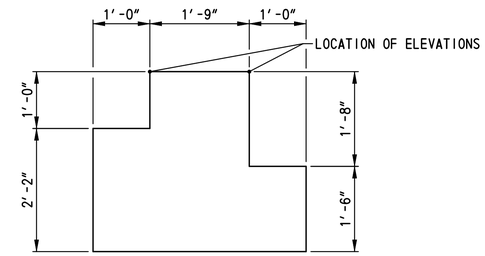

SECTION E-E

SCALE: 3/4"=1'-0"

NOTES:

1. FOR STRUCTURAL SLAB AND SLEEPER SLAB NOTES SEE DWG. NO. AS-01.
2. FOR EXPANSION JOINT DETAILS SEE DETAIL B ON DWG. NO. AS-03.
3. FOR SECTION C-C AND VIEW D-D SEE DWG. NO. AS-03.
4. FOR HORIZONTAL AND VERTICAL GEOMETRY, SEE DWG. NO. HV-02.

DRAFT
NOT FOR BIDDING
AUGUST 2015

r:\31653-000\contract_1d\cadd\Bridge\AS02U301_1D.dgn
9/17/2012 10:47:43 AM

DELAWARE DEPARTMENT OF TRANSPORTATION	ADDENDUMS / REVISIONS	SCALE: AS NOTED	US 13 & PORT PENN RD INTERSECTION	CONTRACT T201011302	BRIDGE NO.	STRUCTURAL SLAB AND SLEEPER SLABS PLAN – 2	AS-02
				COUNTY NEW CASTLE	DESIGNED BY: K.M.L.		SHEET NO. 78
					CHECKED BY: J.A.G.		TOTAL SHTS. 179

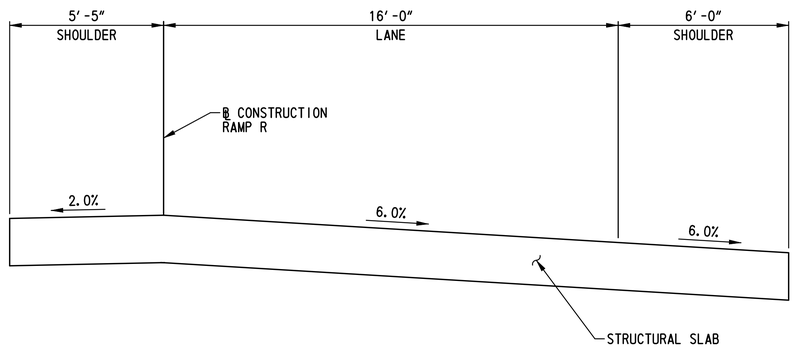

SECTION C-C
SCALE: 3/8"=1'-0"

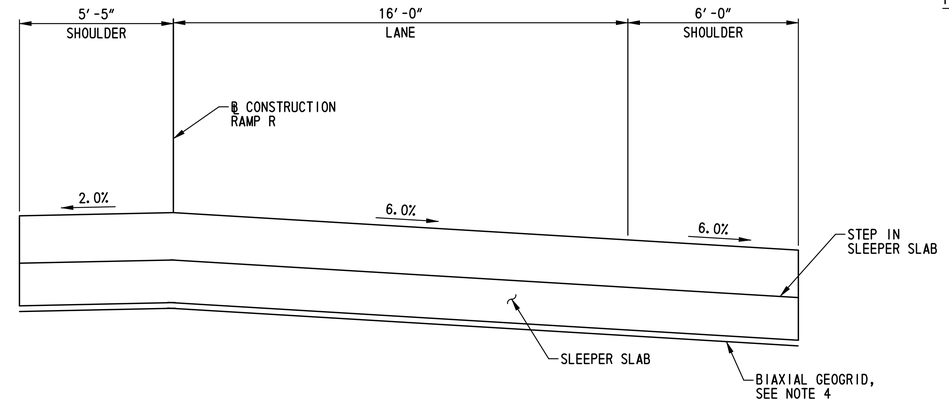

VIEW D-D
SCALE: 3/8"=1'-0"

NOTE:
SLEEPER SLAB B SHOWN SLEEPER SLAB A SIMILAR.

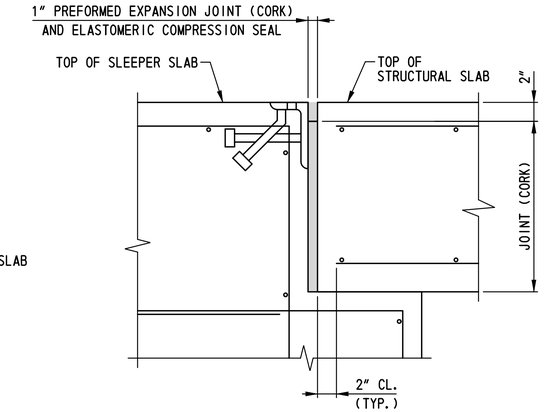

DETAIL B
SCALE: 1 1/2"=1'-0"

DRAFT
NOT FOR BIDDING
AUGUST 2015

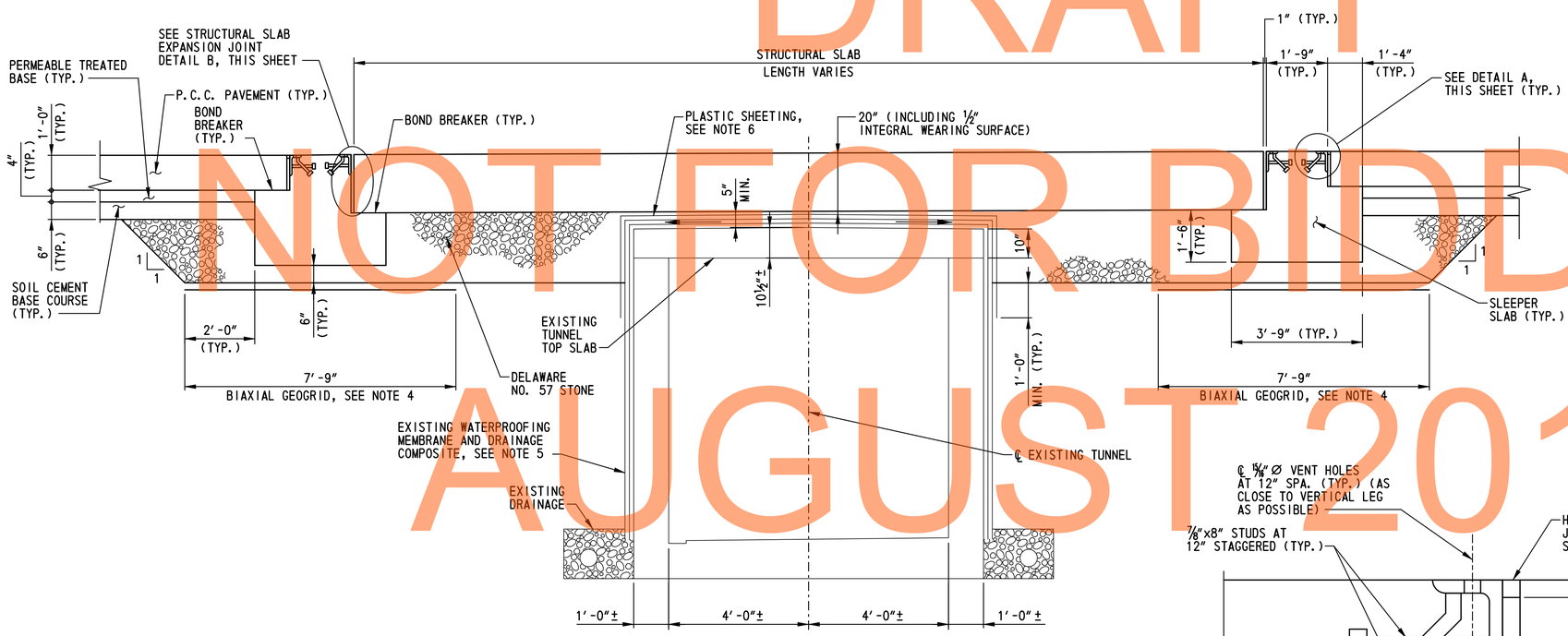

TYPICAL SECTION
SCALE: 1/2"=1'-0"

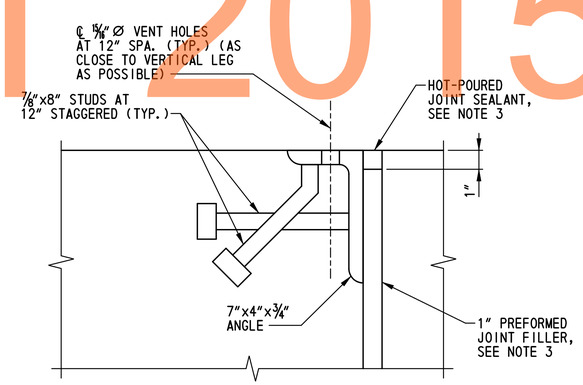

DETAIL A
SCALE: 3"=1'-0"

NOTES:

1. FOR CONCRETE BARRIER DETAILS. SEE DWG. NO. DT-04.
2. FOR LOCATIONS OF SECTION C-C AND VIEW D-D, SEE DWG. NO. AS-02
3. PAYMENT FOR JOINT ANGLES AT APPROACH PAVEMENT EDGE OF SLEEPER SLAB, PREFORMED JOINT FILLER, AND HOT-POURED JOINT SEALANT SHALL BE INCIDENTAL TO ITEM 602001 - PORTLAND CEMENT CONCRETE MASONRY, CLASS A.
4. BIAXIAL GOEGRID SHALL BE AN INTEGRALLY FORMED STRUCTURAL GEOGRID MANUFACTURED OF A STRESS RESISTANT POLYPROPYLENE MATERIAL WITH POSITIVE MECHANICAL INTERLOCK FOR LOAD TRANSFER. THE BIAXIAL GEOGRID SHALL MEET THE FOLLOWING MINIMUM REQUIREMENTS:

APERTURE DIMENSIONS	1.8 IN
MINIMUM RIB THICKNESS	0.05 IN
TRUE INITIAL MODULUS IN USE	24,000 LB/FT
TRUE TENSILE STRENGTH AT 2% STRAIN	380 LB/FT
TRUE TENSILE STRENGTH AT 5% STRAIN	720 LB/FT
JUNCTION EFFICIENCY	93 %
FLEXURAL STIFFNESS	450,000 MG-CM
APERTURE STABILITY	5.8 KG-CM/DEG
RESISTANCE TO INSTALLATION DAMAGE	
IN CLAYEY SAND	91%
IN WELL-GRADED SAND	83%
IN POORLY-GRADED GRAVEL	72%
RESISTANCE TO LONG-TERM DEGRADATION	100%

PAYMENT FOR BIAXIAL GEOGRID SHALL BE INCIDENTAL TO ITEM 602001 - PORTLAND CEMENT CONCRETE MASONRY, CLASS A.

5. EXTREME CAUTION SHALL BE USED TO AVOID DAMAGING THE COMPOSITE WATERPROOFING MEMBRANE OF THE EXISTING PEDESTRIAN TUNNEL. NON-MECHANIZED EXCAVATION WILL BE REQUIRED WITHIN 1' OF THE TOP OF TUNNEL. BARRIER FOOTING AND STRUCTURAL SLAB SHALL NOT BE PLACED DIRECTLY ON TOP OF TUNNEL. IF THE TUNNEL IS EXPOSED DURING EXCAVATION, A 3-PLY ROOFING PAPER BOND BREAKER SHALL BE PLACED BETWEEN THE TOP OF TUNNEL AND THE BOTTOM OF THE BARRIER FOOTING OR STRUCTURAL SLAB. PAYMENT FOR 3-PLY ROOFING PAPER SHALL BE INCIDENTAL TO ITEM 602001 - PORTLAND CEMENT CONCRETE MASONRY, CLASS A.
6. ONE (1) LAYER OF PLASTIC SHEETING SHALL BE PLACED ON TOP OF THE EXISTING WATERPROOFING MEMBRANE BEFORE PLACING THE DELAWARE NO. 57 STONE. PAYMENT FOR PLASTIC SHEETING SHALL BE INCIDENTAL TO ITEM 602001 - PORTLAND CEMENT CONCRETE MASONRY, CLASS A.

AS-03

DELAWARE
DEPARTMENT OF TRANSPORTATION

ADDENDUMS / REVISIONS

SCALE: AS NOTED

US 13 & PORT PENN RD
INTERSECTION

CONTRACT	BRIDGE NO.	
T201011302	DESIGNED BY: K.M.L.	
COUNTY		
NEW CASTLE	CHECKED BY: J.A.G.	

STRUCTURAL SLAB AND
SLEEPER SLABS SECTIONS
AND VIEW

SHEET NO. 79
TOTAL SHTS. 179

n:\31653-000\contract_td\cadd\Bridge\AS03U301_TD.dgn
9/17/2012 10:47:44 AM

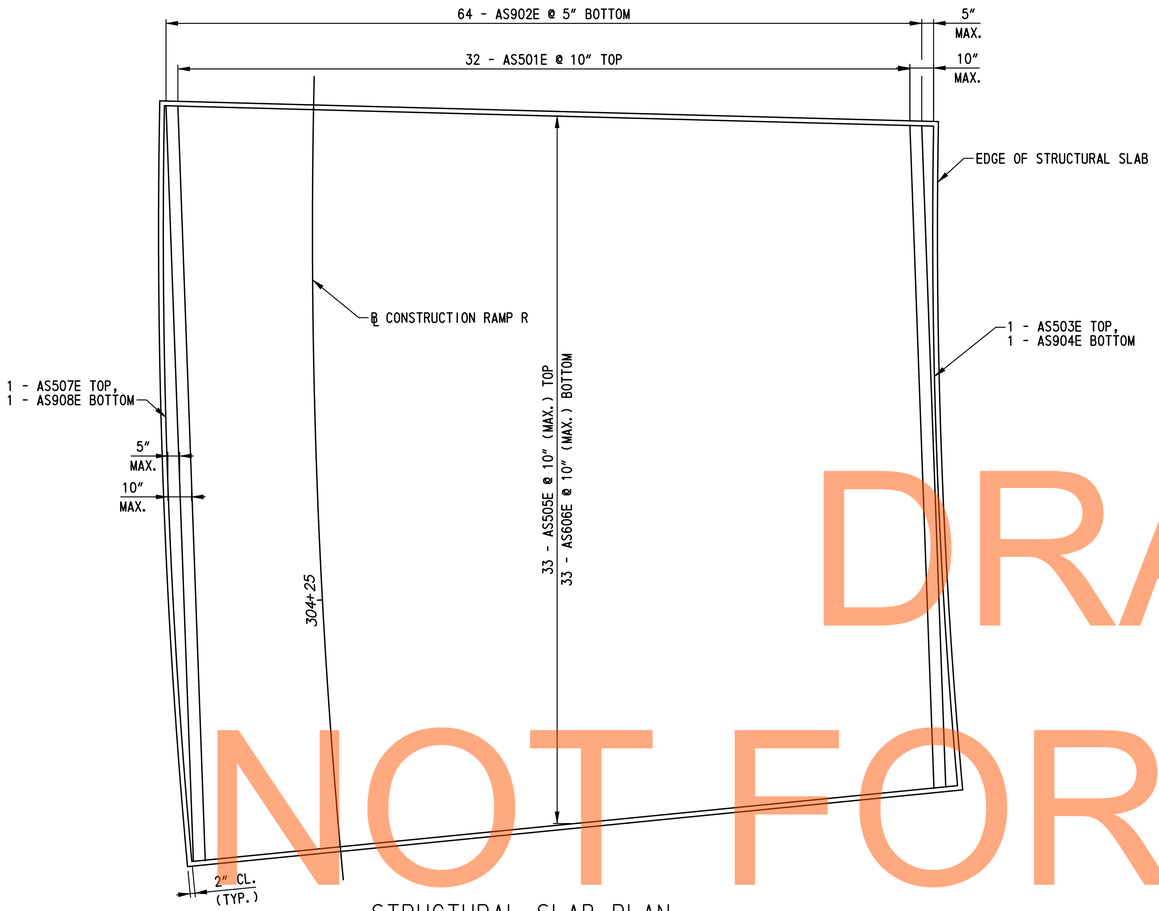

STRUCTURAL SLAB PLAN
REINFORCEMENT
SCALE: 3/8"=1'-0"

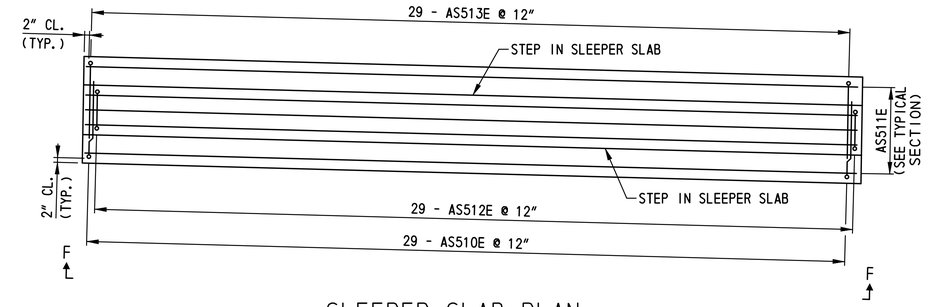

SLEEPER SLAB PLAN
REINFORCEMENT
SCALE: 3/8"=1'-0"

NOTE:
SLEEPER SLAB B REINFORCEMENT SHOWN. SLEEPER SLAB A REINFORCEMENT SIMILAR.

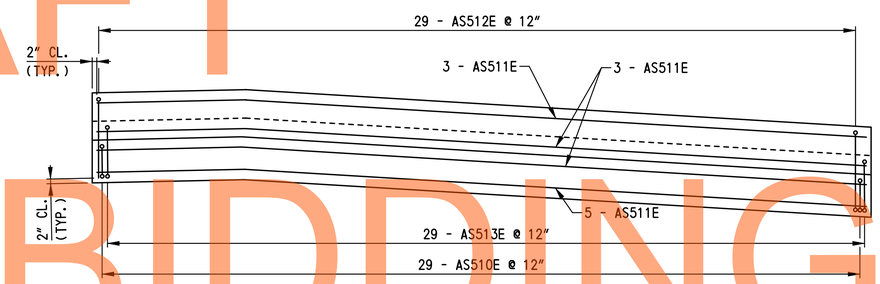

VIEW F-F
REINFORCEMENT
SCALE: 3/8"=1'-0"

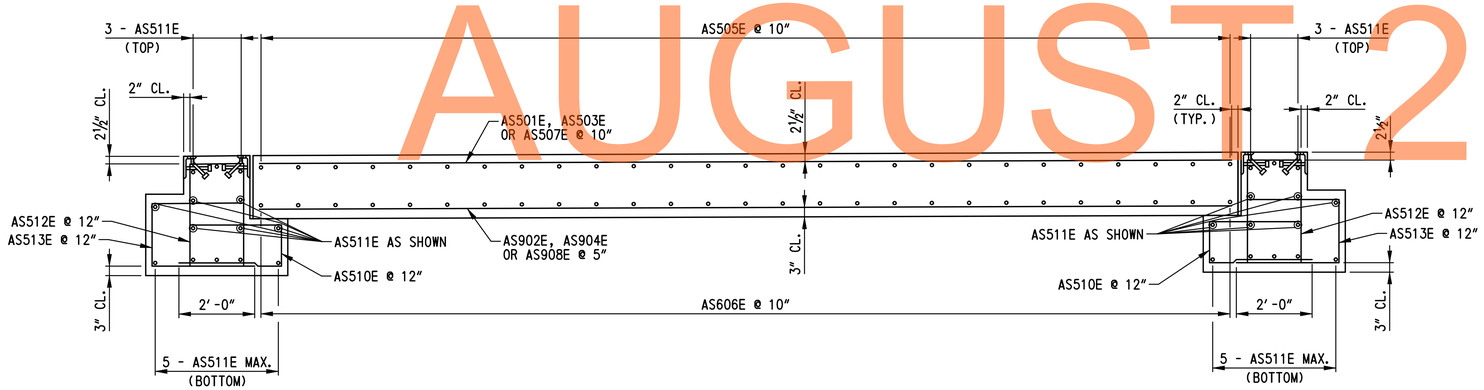

TYPICAL SECTION
REINFORCEMENT
SCALE: 1/2"=1'-0"

NOTES:
1. FOR STRUCTURAL SLAB AND SLEEPER SLAB NOTES, SEE DWG. NO. AS-01.

DRAFT
NOT FOR BIDDING
AUGUST 2015

n:\31653-000\contract 1d\cadd\Bridge\AS04U301_1D.dgn
9/17/2012 10:47:46 AM

DELAWARE DEPARTMENT OF TRANSPORTATION	ADDENDUMS / REVISIONS	US 13 & PORT PENN RD INTERSECTION	CONTRACT T201011302	BRIDGE NO.	STRUCTURAL SLAB AND SLEEPER SLABS REINFORCEMENT PLANS	AS-04
			COUNTY NEW CASTLE	DESIGNED BY: K.M.L.		SHEET NO. 80
				CHECKED BY: J.A.G.		TOTAL SHTS. 179

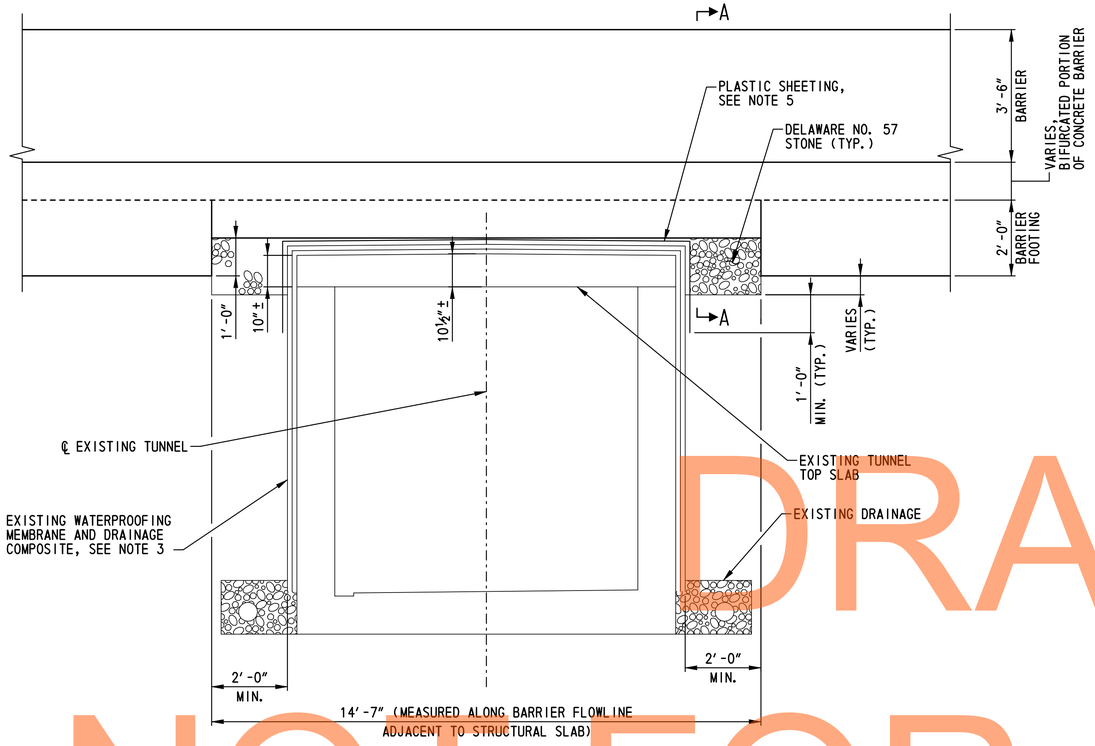

ELEVATION
SCALE: ½"=1'-0"

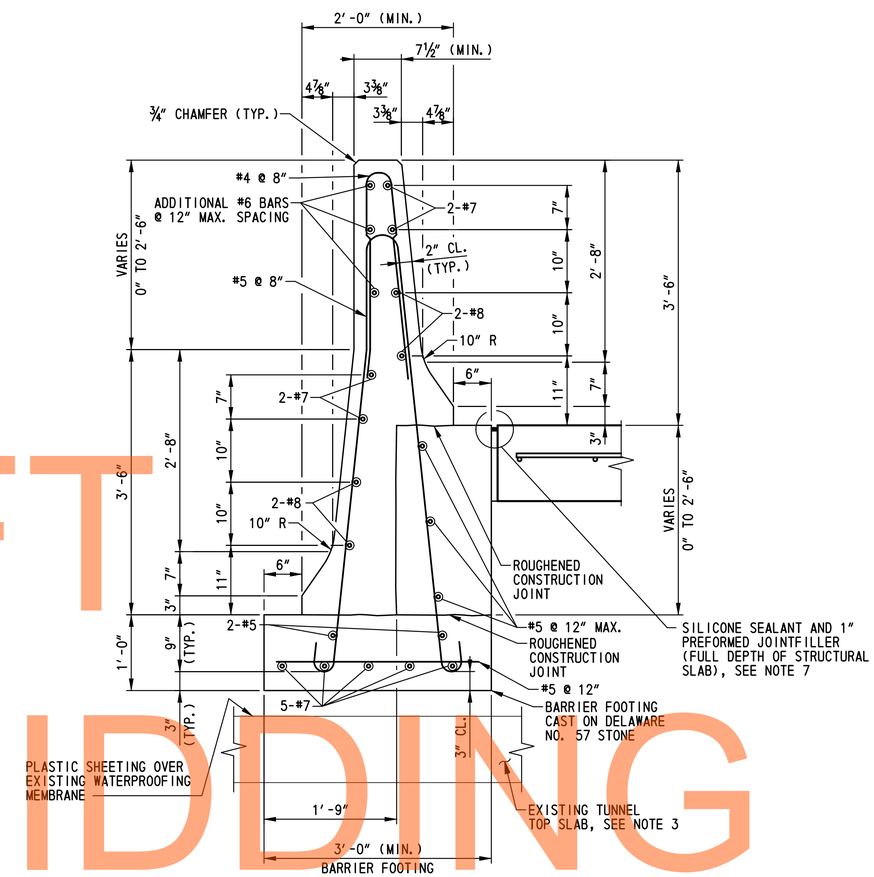

SECTION A-A
SCALE: 1"=1'-0"

NOTES:

1. FOR PLAN VIEW OF MODIFIED CONCRETE BARRIER, SEE DWG. NO. AS-01.
2. THE COST OF THE MODIFIED CONCRETE DOUBLE-FACE BIFURCATED BARRIER SHALL BE INCIDENTAL TO THE COST OF THE CONCRETE DOUBLE-FACE BIFURCATED BARRIER. FOR CONCRETE DOUBLE-FACE BIFURCATED PAYMENT DETAILS, SEE DWG. NO. DT-04.
3. EXTREME CAUTION SHALL BE USED TO AVOID DAMAGING THE COMPOSITE WATERPROOFING MEMBRANE OF THE EXISTING PEDESTRIAN TUNNEL. NON-MECHANIZED EXCAVATION WILL BE REQUIRED WITHIN 1' OF THE TOP OF TUNNEL. BARRIER FOOTING AND STRUCTURAL SLAB SHALL NOT BE PLACED DIRECTLY ON TOP OF TUNNEL. IF THE TUNNEL IS EXPOSED DURING EXCAVATION, A 3-PLY ROOFING PAPER BOND BREAKER SHALL BE PLACED BETWEEN THE TOP OF TUNNEL AND THE BOTTOM OF THE BARRIER FOOTING OR STRUCTURAL SLAB. PAYMENT FOR 3-PLY ROOFING PAPER SHALL BE INCIDENTAL TO ITEM 602001 - PORTLAND CEMENT CONCRETE MASONRY, CLASS A.
4. TOLERANCE ON ALL JOINT SEALANT DETAIL DIMENSIONS SHOWN WITHOUT RANGES SHALL BE PLUS 1/16", MINUS 0".
5. ONE (1) LAYER OF PLASTIC SHEETING SHALL BE PLACED ON TOP OF THE EXISTING WATERPROOFING MEMBRANE BEFORE PLACING THE DELAWARE NO. 57 STONE. PAYMENT FOR PLASTIC SHEETING SHALL BE INCIDENTAL TO ITEM 602001 - PORTLAND CEMENT CONCRETE MASONRY, CLASS A.
6. ALL REINFORCING STEEL SHALL BE PROTECTED WITH FUSION-BONDED EPOXY CONFORMING TO AASHTO M 284 (ASTM A 775).
7. SEE DWG. NO. AS-01 FOR PAYMENT INFORMATION FOR SILICONE JOINT SEALANT AND 1" PREFORMED JOINT FILLER BETWEEN STRUCTURAL SLAB AND CONCRETE DOUBLE-FACED BIFURCATED BARRIER.

DRAFT
NOT FOR BIDDING
AUGUST 2015

① ANY MARK NUMBER WITH SUFFIX 'E' DENOTES EPOXY COATED REINFORCING STEEL.

② ALL MARK 'LOCATION PREFIXES' SHALL CONSIST OF TWO LETTERS AND ARE AS FOLLOWS: AB = ABUTMENT, AS = APPROACH SLAB, BC = BOX CULVERT, BW = BACKWALL, CL = COLUMN, DK = DECK, DL = DOWEL, FT = FOOTING, HW = HEADWALL, MS = MISC. BARS, PA = PARAPET, PR = PIER, SC = SHEETPILE CAP, SL = SLAB, TW = TOEWALL, WL = WALL (UNIQUE LOCATION), WW = WINGWALL

SPECIFICATIONS					BENDING DIMENSIONS (FEET-INCHES /QUARTER INCH)										
QTY.	SIZE	LENGTH	MARK	TYPE	A	B	C	D	E	F/R	G	H	J	K	O
STRUCTURAL SLAB															
32*	5	23-04 2	AS501E	STR		23-04 2									
		TO				TO									
		26-07 2				26-07 2									
			*1 SET OF	27											
64*	9	23-03 2	AS902E	STR		23-03 2									
		TO				TO									
		26-07 2				26-07 2									
			*1 SET OF	54											
1	5	23-02 3	AS503E	9		23-02 3				218-02 0		0-03 3			23-02 2
1	9	23-02 3	AS904E	9		23-02 3				218-02 0		0-03 3			23-02 2
33	5	27-02 0	AS505E	STR		27-02 0									
33	6	27-02 0	AS606E	STR		27-02 0									
1	5	26-07 1	AS507E	STR		26-07 2				218-02 0		0-04 1			26-07 1
1	9	26-07 1	AS908E	STR		26-07 2				218-02 0		0-04 1			26-07 1
58	5	6-02 2	AS510E	17		2-08 2	1-01 0	2-05 0							
28	5	27-02 0	AS511E	STR		27-02 0									
58	5	6-11 0	AS512E	17		2-09 0	1-05 0	2-09 0							
58	5	6-10 2	AS513E	17		2-08 2	1-09 0	2-05 0							

SPECIFICATIONS					BENDING DIMENSIONS (FEET-INCHES /QUARTER INCH)										
QTY.	SIZE	LENGTH	MARK	TYPE	A	B	C	D	E	F/R	G	H	J	K	O

SPECIFICATIONS					BENDING DIMENSIONS (FEET-INCHES /QUARTER INCH)										
QTY.	SIZE	LENGTH	MARK	TYPE	A	B	C	D	E	F/R	G	H	J	K	O

DRAFT
NOT FOR BIDDING
AUGUST 2015

ASTM STANDARD ENGLISH REINFORCING BARS				RECOMMENDED END HOOKS, APPLICABLE TO ALL GRADES				STIRRUP AND TIE HOOKS, APPLICABLE TO ALL GRADES		
	NOMINAL DIMENSIONS				180° HOOKS		90° HOOKS		90° HOOK	135° HOOK
BAR SIZE	DIAMETER (INCHES)	AREA (INCHES²)	WEIGHT (LBS./FT.)	D	A OR G	J	A OR G	D	A OR G	A OR G	A OR G
3	0.375	0.110	0.376	2¼″	5″	3″	6″	1½″	4″	4″	2½″
4	0.500	0.200	0.668	3″	6″	4″	8″	2″	4½″	4½″	3″
5	0.625	0.310	1.043	3¾″	7″	5″	10″	2½″	6″	5½″	3¾″
6	0.750	0.440	1.502	4½″	8″	6″	1-0″	4½″	1-0″	8″	4½″
7	0.875	0.600	2.044	5¼″	10″	7″	1-2″	5¼″	1-2″	9″	5¼″
8	1.000	0.790	2.670	6″	11″	8″	1-4″	6″	1-4″	10½″	6″
9	1.128	1.000	3.400	9½″	1-3″	11¾″	1-7″				
10	1.270	1.270	4.303	10¾″	1-5″	1-1¼″	1-10″				
11	1.410	1.560	5.313	1-0″	1-7″	1-2¾″	2-0″				
14	1.693	2.250	7.650	1-6¼″	2-3″	1-9¾″	2-7″				
18	2.257	4.000	13.600	2-0″	3-0″	2-4½″	3-5″				

NOTES:

1. FIGURES SHOWN IN CIRCLES REPRESENT BAR BEND TYPES.
2. STANDARD BAR BENDS INCLUDE ONLY THOSE TYPES BELOW, INDICATED AS SUCH.
3. ALL DIMENSIONS OUT-TO-OUT, EXCEPT "A" AND "G" ON STD. 180° AND 135° HOOKS.
4. "J" DIMENSIONS ON 180° HOOKS TO BE SHOWN ONLY WHERE NECESSARY TO RESTRICT HOOK SIZE, OTHERWISE STANDARD 'ACI' HOOKS ARE TO BE USED.
5. WHERE "J" IS NOT SHOWN, "J" WILL BE KEPT EQUAL TO OR LESS THAN "H" ON TYPES 3, 5 AND 22. WHERE "J" CAN EXCEED "H", IT SHALL BE SHOWN.
6. "H" DIMENSIONS OF STIRRUPS TO BE SHOWN AS NEEDED TO FIT WITHIN THE CONCRETE.
7. UNLESS OTHERWISE NOTED, DIAMETER "D" IS THE SAME FOR ALL BENDS AND HOOKS ON A BAR (EXCEPT FOR BEND TYPES 11 AND 13).
8. WHERE SLOPE DIFFERS FROM 45° OFFSET, "H" AND "K" MUST BE SHOWN.
9. WHERE BARS ARE TO BE BENT MORE ACCURATELY THAN STANDARD BENDING TOLERANCES, BENDING DIMENSIONS REQUIRING CLOSER FABRICATION SHOULD HAVE LIMITS INDICATED.
10. FOR RECOMMENDED DIAMETER "D", OF BENDS, HOOKS, ETC., REFER TO TABLE ABOVE, 'CRSI' OR 'ACI' TABLES WHERE APPLICABLE AND REQUIRED.
11. TYPE S1-S6, S11, T1-T3 AND T6-T9 APPLICABLE TO BAR SIZES #3 THROUGH #8.

STANDARD BAR BENDS

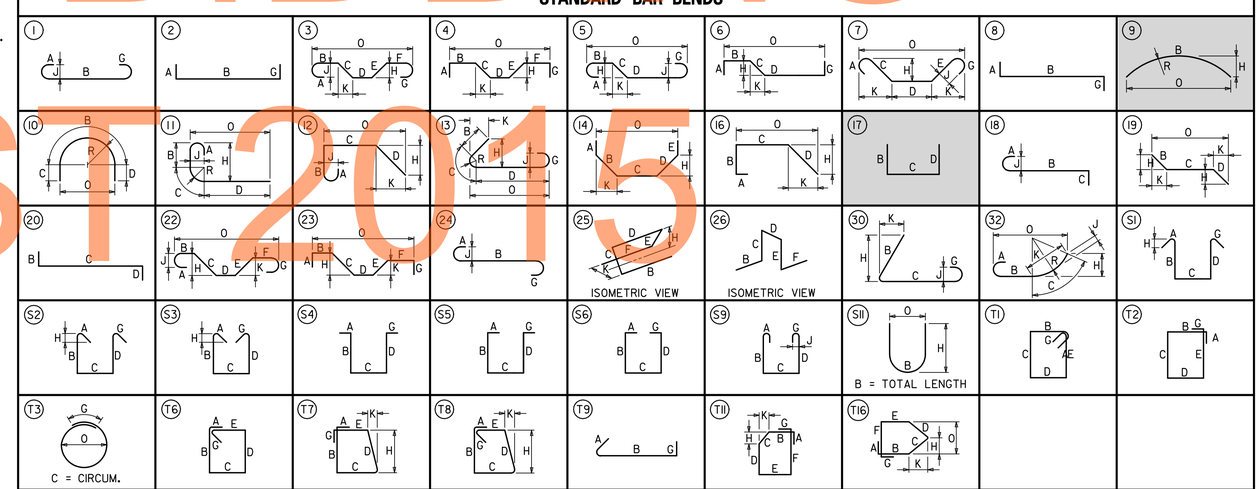

SPECIAL BAR BENDS

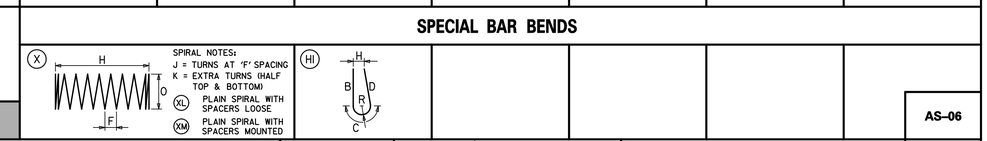

STIRRUP AND TIE HOOKS

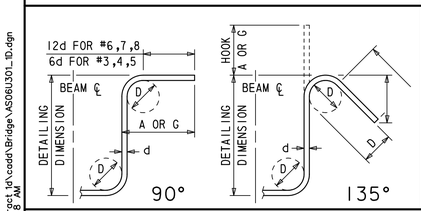

180° AND 90° END HOOKS

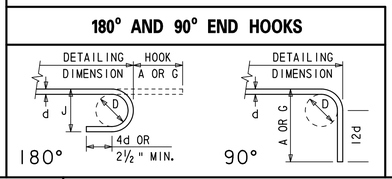

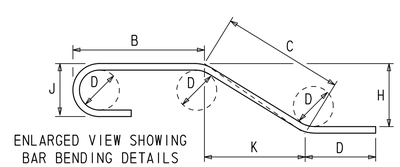

ENLARGED VIEW SHOWING BAR BENDING DETAILS

DELAWARE DEPARTMENT OF TRANSPORTATION	ADDENDUMS / REVISIONS	US 13 & PORT PENN RD INTERSECTION	CONTRACT T201011302	BRIDGE NO.	STRUCTURAL SLAB AND SLEEPER SLABS REINFORCEMENT LIST	AS-06
			COUNTY NEW CASTLE	DESIGNED BY: K.M.L.		SHEET NO. 82
				CHECKED BY: J.A.G.		TOTAL SHTS. 179

n:\3653-000\contract 1d\cadd\Bridge\AS06U301_10.dgn
9/17/2012 10:47:48 AM