PROJECT LIGHTING NOTES:

1. ALL OFFSET AND COBRA HEAD LIGHTING STANDARD POLE BASES SHALL BE TYPE 6.
2. SERVICE RUNS ARE SHOWN IN APPROXIMATE LOCATIONS. THE CONTRACTOR SHALL LOCATE THE SERVICE RUNS IN A MANNER THAT AVOIDS CONFLICTS WITH ALL EXISTING AND PROPOSED FEATURES AS FIELD CONDITIONS DICTATE AND AS APPROVED BY THE ENGINEER.
3. STATIONS AND OFFSETS NOTED IN THE LIGHTING STANDARD SCHEDULES ARE GIVEN TO THE CENTER OF THE POLE.
4. THE ELECTRICAL CONTRACTOR SHALL COORDINATE HIS WORK WITH ALL THE CONTRACTORS INVOLVED ON THIS PROJECT. THE ELECTRICAL CONTRACTOR SHALL COORDINATE WITH THE ENGINEER AND THE GENERAL SUPERINTENDENT THE LOCATIONS OF ALL CONDUIT AND POLE BASES TO ELIMINATE CONSTRUCTION CONFLICTS.
5. BURIED ELECTRICAL CABLE AND CONDUIT, AND OTHER UTILITIES MAY EXIST THROUGHOUT THIS PROJECT. THE EXISTING UTILITY LOCATIONS SHOWN ON THE PLANS ARE APPROXIMATE. THE CONTRACTOR SHALL BE RESPONSIBLE FOR LOCATING AND PREVENTING DAMAGE TO THEM, AND MAINTAINING THEM IN SERVICE WHEN AND WHERE REQUIRED. THE CONTRACTOR SHALL VERIFY THE EXACT LOCATIONS PRIOR TO COMMENCING WORK. THE CONTRACTOR SHALL VERIFY THE LOCATION OF ALL EXISTING UTILITIES BY HAND EXCAVATION PRIOR TO TRENCHING BY MACHINE.
6. TERMINATE ALL CONDUITS WHEN ENTERING ENCLOSURES WITH LOCKNUT AND BONDING BUSHINGS. ALL RGS CONDUITS SHALL BE BONDED WITH THE GROUND WIRE.
7. COLOR CODING SHALL BE PROVIDED THROUGHOUT THE ENTIRE NETWORK FOR SERVICE, FEEDER, BRANCH AND CONTROL CONDUCTORS. EACH PHASE SHALL BE AN INDEPENDENT COLOR. CONDUCTORS SHALL HAVE FACTORY IMPREGNATED COLOR THROUGHOUT THEIR ENTIRE LENGTH. PHASE TAPING IS NOT PERMITTED.
8. ALL LIGHTING POLE BASES OUTSIDE THE LIMITS OF PROPOSED PAVEMENT TO BE REMOVED SHALL BE REMOVED TO A MINIMUM OF 12 INCHES BELOW PROPOSED GRADE. ALL LIGHTING POLE BASES INSIDE THE LIMITS OF PROPOSED PAVEMENT TO BE REMOVED SHALL BE REMOVED TO A MINIMUM OF 12 INCHES BELOW THE SUBGRADE ELEVATION.
9. ALL FUSED CONNECTIONS SHALL BE MADE IN THE TRANSFORMER BASE. SPLICES IN JUNCTION WELLS, JUNCTION AND PULL BOXES SHALL NOT BE FUSED.
10. THE CONTRACTOR SHALL VERIFY ALL DIMENSIONS AND CONDITIONS AT THE SITE PRIOR TO WORK.
11. ALL CONDUITS, JUNCTION WELLS, LIGHTING STANDARDS, ETC. SHALL BE STAKED OUT AND EVERY LOCATION APPROVED BY THE ENGINEER BEFORE ANY WORK IS DONE.
12. ALL GROUNDING CONDUCTORS IN PROPOSED UNDERGROUND CONDUITS SHALL BE STRANDED COPPER WITH SIZE AS NOTED IN THE LIGHTING SERVICE SCHEDULE.
13. THE CONTRACTOR SHALL VERIFY THE OPERATING VOLTAGE OF ALL CIRCUITS OF THE EXISTING LIGHTING SYSTEMS THAT ARE BEING TIED INTO TO ENSURE COMPATIBILITY WITH PROPOSED LUMINAIRES.
14. THE CONTRACTOR SHALL VERIFY THE OPERATING CIRCUIT AND PHASE OF ALL EXISTING ROADWAY LIGHTING EQUIPMENT WHERE THE ELECTRICAL SERVICE IS BEING INTERRUPTED. THE EXISTING ROADWAY EQUIPMENT SHALL BE RECONNECTED TO THE SAME CIRCUIT AND PHASE AS IS EXISTING UNLESS OTHERWISE NOTED ON THE PLANS.
15. THE ELECTRICAL CONTRACTOR SHALL COORDINATE THE INSTALLATION OF LIGHTING CONDUITS WITH ITMS CONDUITS. ITMS AND LIGHTING CONDUITS MAY SHARE A COMMON TRENCH BUT SHALL NOT SHARE COMMON JUNCTION WELLS.
16. EXISTING ROADWAY LIGHTING CONDUITS SHALL BE EXISTING TO REMAIN UNLESS NOTED OTHERWISE ON THE PLANS.
17. SPLICES FOR ALL ROADWAY LIGHTING ELECTRICAL CABLES, INCLUDING RE-CONNECTION OF EXISTING IMPACTED ELECTRICAL CABLES, SHALL BE COMPLETED USING APPROVED SPLICE KITS OR METHODS APPROVED BY THE ENGINEER AND SHALL BE INCIDENTAL TO THE SUPPLY AND INSTALLATION OF VARIOUS ROADWAY LIGHTING ELECTRICAL CABLES.
18. POLE NUMBERS, CIRCUITS AND CABLE SIZES FOR EXISTING ROADWAY LIGHTING OBTAINED FROM DELDOT CONTRACT NOS. 23-500-38 AND 25-128-04.
19. UNDERGROUND CONDUITS SHALL BE SLOPED TO DRAIN TO THE NEAREST JUNCTION WELL. IF THIS CANNOT BE ACCOMPLISHED, PROVIDE A DRAINAGE TEE AT THE LOW POINT OF CONDUIT RUN. DRAINAGE TEES SHALL BE INCIDENTAL TO CONDUIT ITEMS.
20. PAYMENT FOR THE RELOCATION OR REMOVAL OF EXISTING FEATURES SHALL BE MADE UNDER THE FOLLOWING ITEMS:
    211000 - REMOVAL OF STRUCTURES AND OBSTRUCTIONS (LS) - FOR CONDUIT REMOVAL
    744519 - RELOCATION OF EXISTING JUNCTION WELL (EA)
    746509 - RELOCATING LIGHT POLE (EA)
21. IN ADDITION TO THE CONDUIT LENGTHS IN THE SCHEDULES, AN ADDITIONAL 10' LENGTH OF CABLE SHALL BE ADDED PER JUNCTION WELL LEFT IN A LOOP. AN ADDITIONAL 6' LENGTH OF CABLE SHALL BE ADDED AT EACH LIGHTING STANDARD LOCATION TO ACCOUNT FOR THE LENGTH OF CABLE EXTENDING INTO THE POLE BASE AND BACK DOWN TO CONTINUE THE LIGHTING CIRCUIT.
22. IF AN UNDERGROUND UTILITY IS DAMAGED, THE CONTRACTOR SHALL IMMEDIATELY NOTIFY THE ENGINEER AND THE OWNER OF THE UTILITY. ANY DAMAGED SUSTAINED TO UTILITIES ABOVE OR BELOW GROUND SHALL BE REPAIRED BY THE CONTRACTOR UNDER THE DIRECTION OF THE UTILITY OWNER AT THE CONTRACTOR'S EXPENSE. UNDER NO CIRCUMSTANCE SHALL THE CONTRACTOR BACKFILL AN EXCAVATION AFFECTING SAID UTILITY WITHOUT FIRST RECEIVING PERMISSION FROM THE UTILITY OWNER.
23. ALL JUNCTION WELL LIDS AND FRAMES SHALL BE BONDED TO THE GROUND WIRE.
24. ALL PROPOSED OFFSET AND COBRA LIGHTING STANDARDS SHALL BE INSTALLED WITH BREAKAWAY TRANSFORMER BASES, WHETHER PROTECTED OR UNPROTECTED, UNLESS OTHERWISE NOTED.
25. THE I.D. TAGS ON THE EXISTING LIGHTING POLES SHALL BE REPLACED WITH THE INFORMATION SHOWING THE NEW CIRCUIT NAMES, LIGHTING STANDARD NUMBERS, AND LAMP WATTAGES. NEW I.D. TAGS SHALL BE ATTACHED ON THE NEW LIGHTING POLES SHOWING THE SAME INFORMATION.

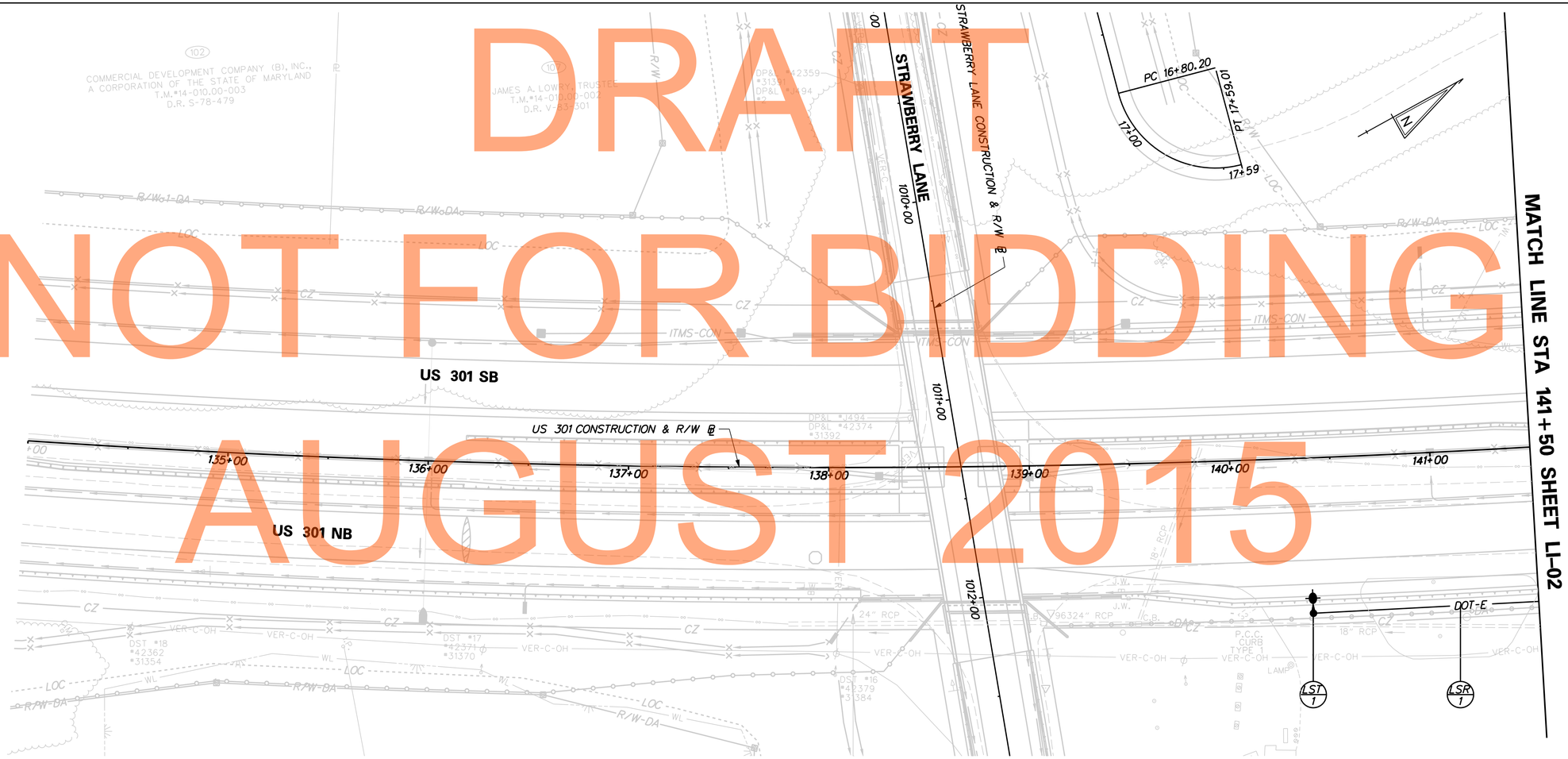

DRAFT
NOT FOR BIDDING
AUGUST 2015

LIGHTING STANDARD SCHEDULE

NO.	CIRCUIT NO.	STATION	OFFSET	ARM	LIGHT STANDARD
1	A	140+39	77.5 RT.	-	40FT W/250W HPS OFFSET

LIGHTING SERVICE SCHEDULE

SERVICE RUN	DISTANCE (L.F.)	DESCRIPTION	INSTALLATION
1	155.0	2 #2 & 1 #2 GND IN 4" SCH 80 PVC CONDUIT	TRENCH

LI-01

DELAWARE DEPARTMENT OF TRANSPORTATION

ADDENDUMS / REVISIONS

SCALE 0 30 60 90 FEET

US 301
MARYLAND STATE LINE
TO LEVELS ROAD

CONTRACT	BRIDGE NO.	
T200811301	DESIGNED BY: ML	
COUNTY		
NEW CASTLE	CHECKED BY: JM	

LIGHTING PLAN

SHEET NO. 666
TOTAL SHTS. 850

J:\2008 PROJECTS\E3X34801\700CADD\750AET\LIGHT\LI_301AET_001.DGN

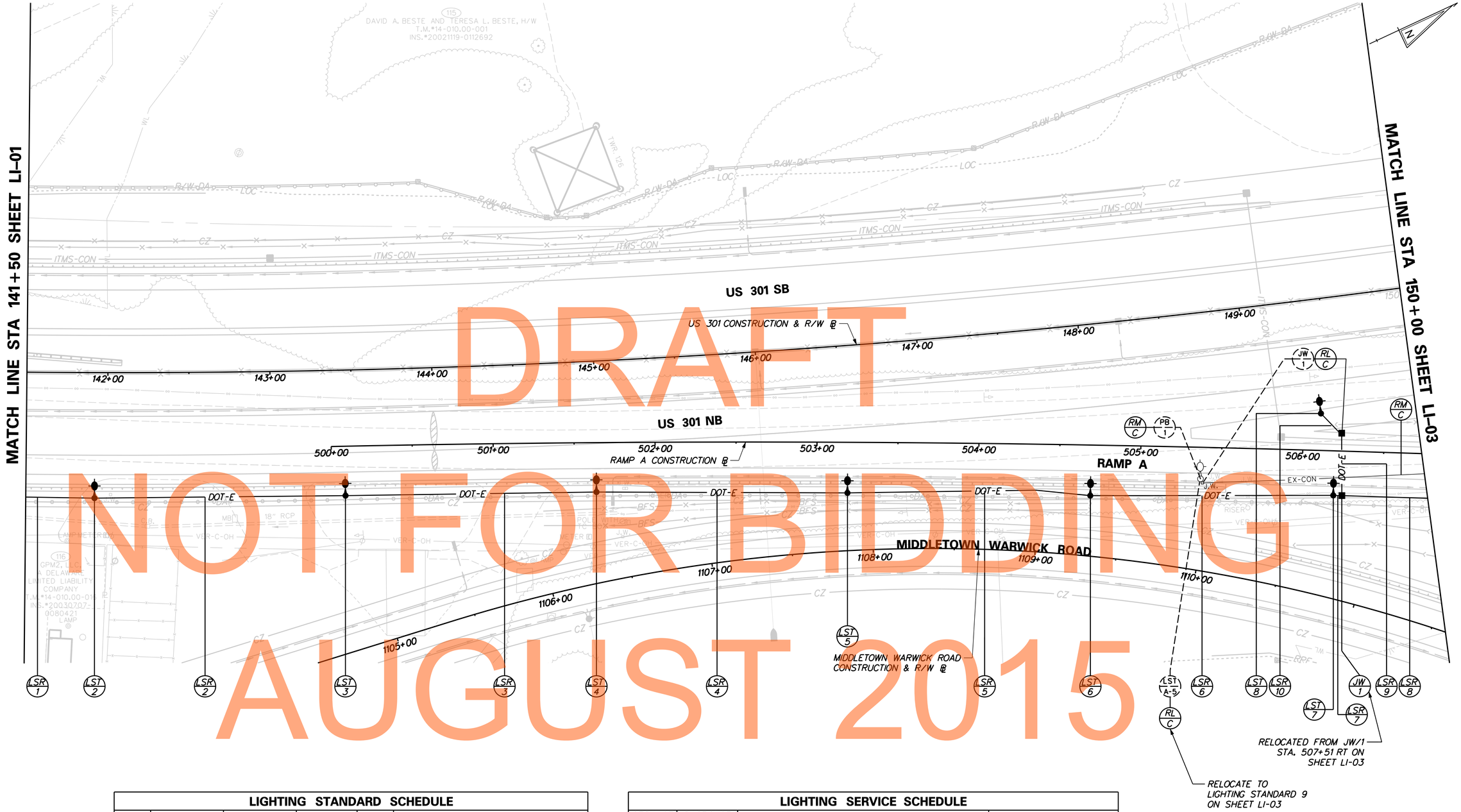

DRAFT
NOT FOR BIDDING
AUGUST 2015

LIGHTING STANDARD SCHEDULE

NO.	CIRCUIT NO.	STATION	OFFSET	ARM	LIGHT STANDARD
2	A	141+92	77.5 RT.	-	40FT W/250W HPS OFFSET
3	A	500+08	30.5 RT.	-	40FT W/250W HPS OFFSET
4	A	501+64	30.5 RT.	-	40FT W/250W HPS OFFSET
5	A	503+19	31.3 RT.	-	40FT W/250W HPS OFFSET
6	A	504+69	31.3 RT.	-	40FT W/250W HPS OFFSET
7	A	506+20	27.5 RT.	-	40FT W/250W HPS OFFSET
8	A	149+42	70.6 RT.	-	40FT W/250W HPS OFFSET

LIGHTING SERVICE SCHEDULE

SERVICE RUN	DISTANCE (L.F.)	DESCRIPTION	INSTALLATION
2	155.0	2 #2 & 1 #2 GND IN 4" SCH 80 PVC CONDUIT	TRENCH
3	155.0	2 #2 & 1 #2 GND IN 4" SCH 80 PVC CONDUIT	TRENCH
4	155.0	2 #2 & 1 #2 GND IN 4" SCH 80 PVC CONDUIT	TRENCH
5	150.0	2 #2 & 1 #2 GND IN 4" SCH 80 PVC CONDUIT	TRENCH
6	150.0	2 #2 & 1 #2 GND IN 4" SCH 80 PVC CONDUIT	TRENCH
7	4.2	2 #2 & 1 #2 GND IN 4" SCH 80 PVC CONDUIT	TRENCH
8	143.7	2 #2 & 1 #2 GND IN 4" SCH 80 PVC CONDUIT	TRENCH
9	32.3	2 #2 & 1 #2 GND IN 4" SCH 80 PVC CONDUIT	TRENCH
10	20.0	2 #2 & 1 #2 GND IN 4" SCH 80 PVC CONDUIT	TRENCH

LI-02

DELAWARE DEPARTMENT OF TRANSPORTATION

ADDENDUMS / REVISIONS

SCALE 0 30 60 90 FEET

US 301
MARYLAND STATE LINE
TO LEVELS ROAD

CONTRACT T200811301
COUNTY NEW CASTLE
BRIDGE NO.
DESIGNED BY: ML
CHECKED BY: JM

LIGHTING PLAN

SHEET NO. 667
TOTAL SHTS. 850

J:\2008 PROJECTS\E3X34801\700CADD\750AET\LIGHT\LI_301AET_002.DGN

LIGHTING STANDARD SCHEDULE

NO.	CIRCUIT NO.	STATION	OFFSET	ARM	LIGHT STANDARD
9	A	507+70	27.5 RT.	-	EXIST. 35FT W/250W HPS OFFSET
10	A	509+20	27.5 RT.	-	EXIST. 35FT W/250W HPS OFFSET
11	A	510+70	9.5 LT.	-	EXIST. 35FT W/250W HPS OFFSET
12	A	512+21	9.2 LT.	-	EXIST. 35FT W/250W HPS OFFSET

LIGHTING SERVICE SCHEDULE

SERVICE RUN	DISTANCE (L.F.)	DESCRIPTION	INSTALLATION
11	150.0	2 #2 & 1 #2 GND IN 4" SCH 80 PVC CONDUIT	TRENCH
12	80.1	2 #2 & 1 #2 GND IN 4" SCH 80 PVC CONDUIT	TRENCH
13	50.0	2 #2 & 1 #2 GND IN 4" SCH 80 PVC CONDUIT	TRENCH (NOTE 2)
14	59.6	2 #2 & 1 #2 GND IN 4" SCH 80 PVC CONDUIT	TRENCH
15	29.0	2 #2 & 1 #2 GND IN 4" SCH 80 PVC CONDUIT	TRENCH
16	8.5	2 #2 & 1 #2 GND IN 4" SCH 80 PVC CONDUIT	TRENCH
17	150.0	2 #2 & 1 #2 GND IN 4" SCH 80 PVC CONDUIT	TRENCH
18	75.7	2 #2 & 1 #2 GND IN 4" SCH 80 PVC CONDUIT	TRENCH (NOTE 2)
19	50.4	2 #2/0 & 1 #2/0 GND IN EXIST. CONDUIT	EXIST. COND.(NOTE 1)
20	84.6	2 #2/0 & 1 #2/0 GND IN EXIST. CONDUIT	EXIST. COND.(NOTE 1)
21	66.0	2 #2/0 & 1 #2/0 GND IN EXIST. CONDUIT	EXIST. COND.(NOTE 1)
21A	93.0	2 #2/0 & 1 #2/0 GND IN EXIST. CONDUIT	EXIST. COND.(NOTE 1)
21B	99.0	2 #2/0 & 1 #2/0 GND IN EXIST. CONDUIT	EXIST. COND.

NOTES:
1. REMOVE EXISTING CIRCUIT D CABLES AND INSTALL NEW CABLES AS SHOWN FOR CIRCUIT D. LEAVE CIRCUIT C AS IS. TURN POWER OFF AT PANEL LP-A PRIOR TO ANY WORK BEING DONE.
2. CONDUIT TO TIE INTO EXISTING JUNCTION WELL. SPLICE NEW #2 AWG CABLES TO EXISTING CIRCUIT "A" IN EXISTING JUNCTION WELL.

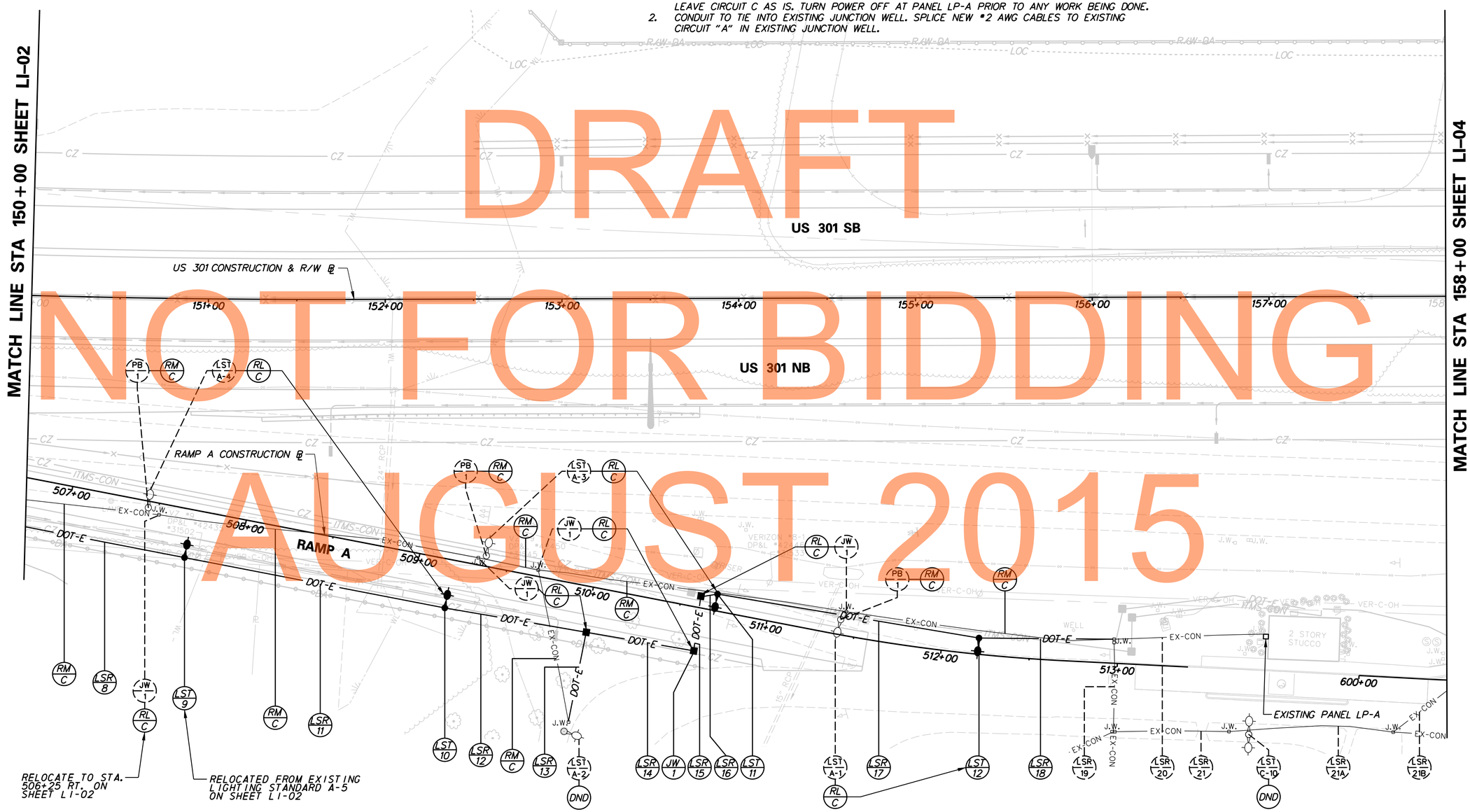

LI-03

DELAWARE DEPARTMENT OF TRANSPORTATION

ADDENDUMS / REVISIONS

SCALE 0 30 60 90 FEET

US 301
MARYLAND STATE LINE
TO LEVELS ROAD

CONTRACT	BRIDGE NO.
T200811301	DESIGNED BY: ML
COUNTY	
NEW CASTLE	CHECKED BY: JM

LIGHTING PLAN

SHEET NO. 668
TOTAL SHTS. 850

J:\2008 PROJECTS\E3X3480I\700CADD\750AET\LIGHT\LI_301AET_003.DGN

LIGHTING STANDARD SCHEDULE

NO.	CIRCUIT NO.	STATION	OFFSET	ARM	LIGHT STANDARD
13	D	600+96	11.3 LT.	-	EXIST. 35FT W/250W HPS OFFSET
14	D	602+73	10.3 LT.	-	EXIST. 35FT W/250W HPS OFFSET
15	D	604+28	27.5 RT.	-	EXIST. 35FT W/250W HPS OFFSET
16	D	605+83	27.6 RT.	-	40FT W/250W HPS OFFSET
17	D	163+56	66.5 RT.	-	40FT W/250W HPS OFFSET
18	D	607+46	29.3 RT.	-	40FT W/250W HPS OFFSET

LIGHTING SERVICE SCHEDULE

SERVICE RUN	DISTANCE (L.F.)	DESCRIPTION	INSTALLATION
22	19.4	2 #2/0 & 1 #2/0 GND IN 4" SCH 80 PVC COND.	TRENCH (NOTE 1)
23	167.0	2 #2/0 & 1 #2/0 GND IN 4" SCH 80 PVC COND.	TRENCH
24	27.8	2 #2/0 & 1 #2/0 GND IN 4" SCH 80 PVC COND.	TRENCH
25	7.7	2 #2/0 & 1 #2/0 GND IN 4" SCH 80 PVC COND.	TRENCH
26	145.0	2 #2/0 & 1 #2/0 GND IN 4" SCH 80 PVC COND.	TRENCH
27	155.0	2 #2/0 & 1 #2/0 GND IN 4" SCH 80 PVC COND.	TRENCH
28	52.9	2 #2/0 & 1 #2/0 GND IN 4" SCH 80 PVC COND.	TRENCH
29	47.0	2 #2 & 1 #2 GND IN 4" SCH 80 PVC CONDUIT	TRENCH
30	5.6	2 #2 & 1 #2 GND IN 4" SCH 80 PVC CONDUIT	TRENCH
31	105.0	2 #2/0 & 1 #2/0 GND IN 4" SCH 80 PVC COND.	TRENCH
32	150.0	2 #2/0 & 1 #2/0 GND IN 4" SCH 80 PVC COND.	TRENCH

NOTES. 1. SPLICE NEW #2 CABLES TO EXISTING CIRCUIT D TO FEED NEW LIGHTING.

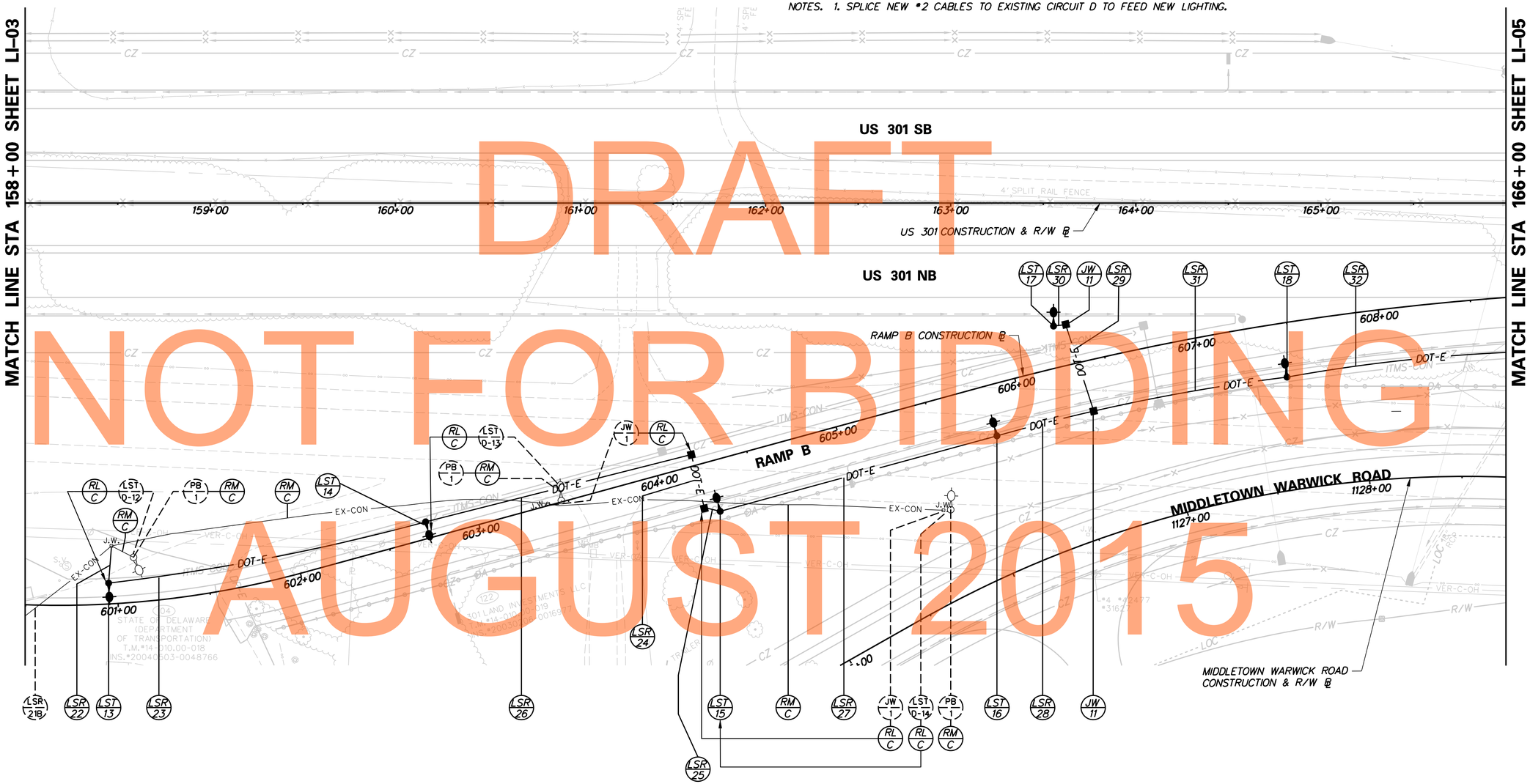

DRAFT
NOT FOR BIDDING
AUGUST 2015

J:\2008 PROJECTS\E3X3480\700CADD\750AET\LIGHT\LI_301AET_004.DGN

LI-04

DELAWARE DEPARTMENT OF TRANSPORTATION	ADDENDUMS / REVISIONS	SCALE 0 30 60 90 FEET	US 301 MARYLAND STATE LINE TO LEVELS ROAD	CONTRACT T200811301	BRIDGE NO.	LIGHTING PLAN	SHEET NO. 669
				COUNTY NEW CASTLE	DESIGNED BY: ML		TOTAL SHTS. 850
					CHECKED BY: JM		

LIGHTING STANDARD SCHEDULE					
NO.	CIRCUIT NO.	STATION	OFFSET	ARM	LIGHT STANDARD
19	D	608+99	30.8 RT.	-	40FT W/250W HPS OFFSET
20	D	167+86	78.5 RT.	-	40FT W/250W HPS OFFSET
21	D	169+41	78.5 RT.	-	40FT W/250W HPS OFFSET
22	D	170+96	78.5 RT.	-	40FT W/250W HPS OFFSET
23	D	172+51	78.5 RT.	-	40FT W/250W HPS OFFSET

LIGHTING SERVICE SCHEDULE			
SERVICE RUN	DISTANCE (L.F.)	DESCRIPTION	INSTALLATION
33	155.0	2 #2/0 & 1 #2/0 GND IN 4" SCH 80 PVC CON.	TRENCH
34	155.0	2 #2/0 & 1 #2/0 GND IN 4" SCH 80 PVC CON.	TRENCH
35	51.0	2 #2/0 & 1 #2/0 GND IN 4" SCH 80 PVC CON.	TRENCH
35A	105.0	2 #2 & 1 #2 GND IN 4" SCH 80 PVC CONDUIT	TRENCH
36	155.0	2 #2 & 1 #2 GND IN 4" SCH 80 PVC CONDUIT	TRENCH
37	155.0	2 #2 & 1 #2 GND IN 4" SCH 80 PVC CONDUIT	TRENCH

NOTES. 1. CABLES TO BE SPLICED FROM #2/0 TO #2 IN JUNCTION WELL.

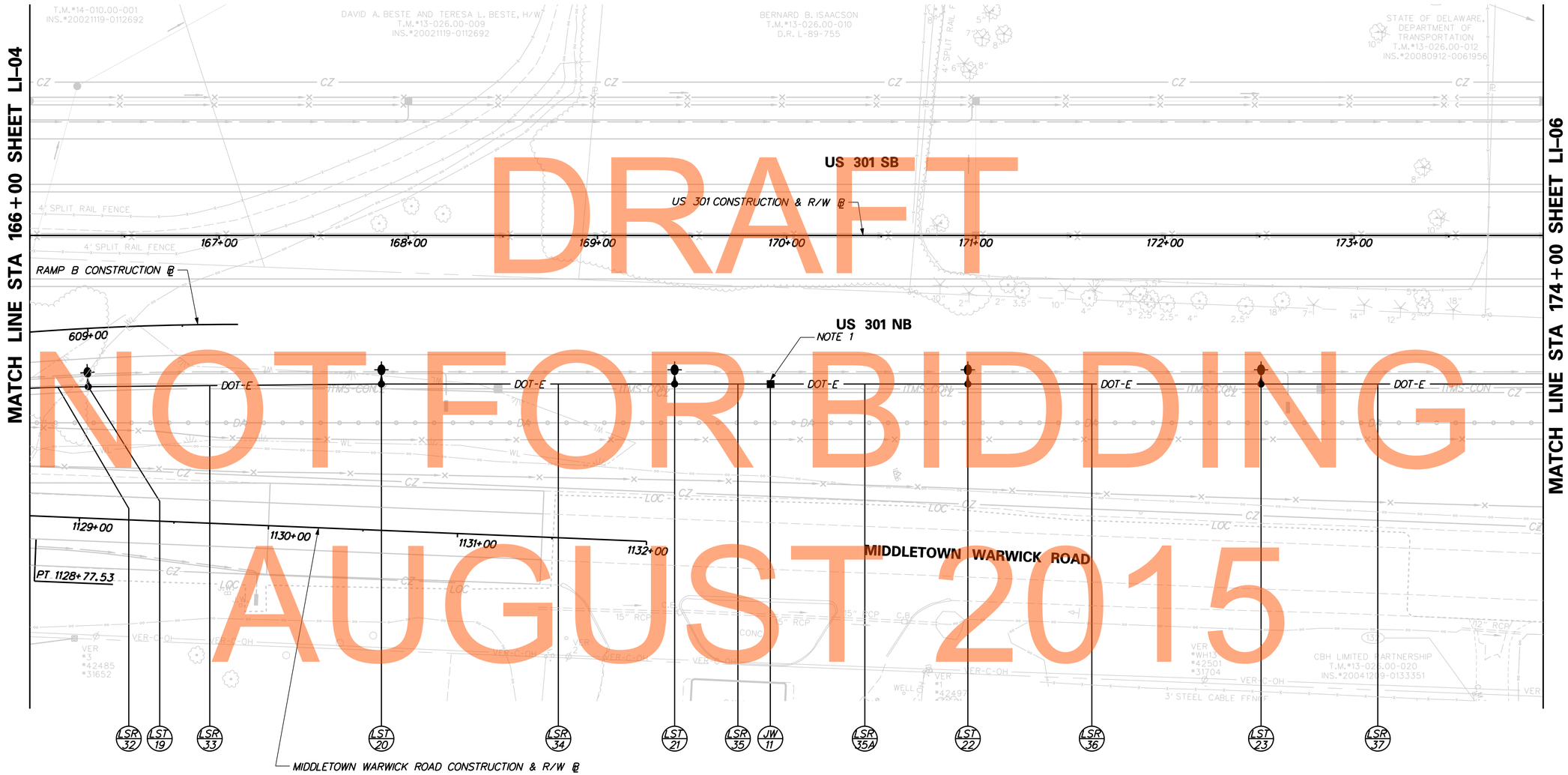

DRAFT
NOT FOR BIDDING
AUGUST 2015

LI-05

DELAWARE DEPARTMENT OF TRANSPORTATION

ADDENDUMS / REVISIONS

SCALE 0 30 60 90 FEET

US 301 MARYLAND STATE LINE TO LEVELS ROAD

CONTRACT	BRIDGE NO.	
T200811301	DESIGNED BY: ML	
COUNTY		
NEW CASTLE	CHECKED BY: JM	

LIGHTING PLAN

SHEET NO. 670
TOTAL SHTS. 850

J:\2008 PROJECTS\E3X34801\700CADD\750AET\LIGHT\LI_301AET_005.DGN

LIGHTING STANDARD SCHEDULE					
NO.	CIRCUIT NO.	STATION	OFFSET	ARM	LIGHT STANDARD
24	D	174+06	78.5 RT.	-	40FT W/250W HPS OFFSET
25	D	175+61	78.5 RT.	-	40FT W/250W HPS OFFSET (NOTE 1)
26	D	177+16	78.5 RT.	-	40FT W/250W HPS OFFSET (NOTE 1)
27	D	178+71	78.5 RT.	-	40FT W/250W HPS OFFSET (NOTE 1)

LIGHTING SERVICE SCHEDULE			
SERVICE RUN	DISTANCE (L.F.)	DESCRIPTION	INSTALLATION
38	155.0	2 #2 & 1 #2 GND IN 4" SCH 80 PVC CONDUIT	TRENCH (NOTE 1)
39	155.0	2 #2 & 1 #2 GND IN 4" SCH 80 PVC CONDUIT	TRENCH (NOTE 1)
40	155.0	2 #2 & 1 #2 GND IN 4" SCH 80 PVC CONDUIT	TRENCH (NOTE 1)

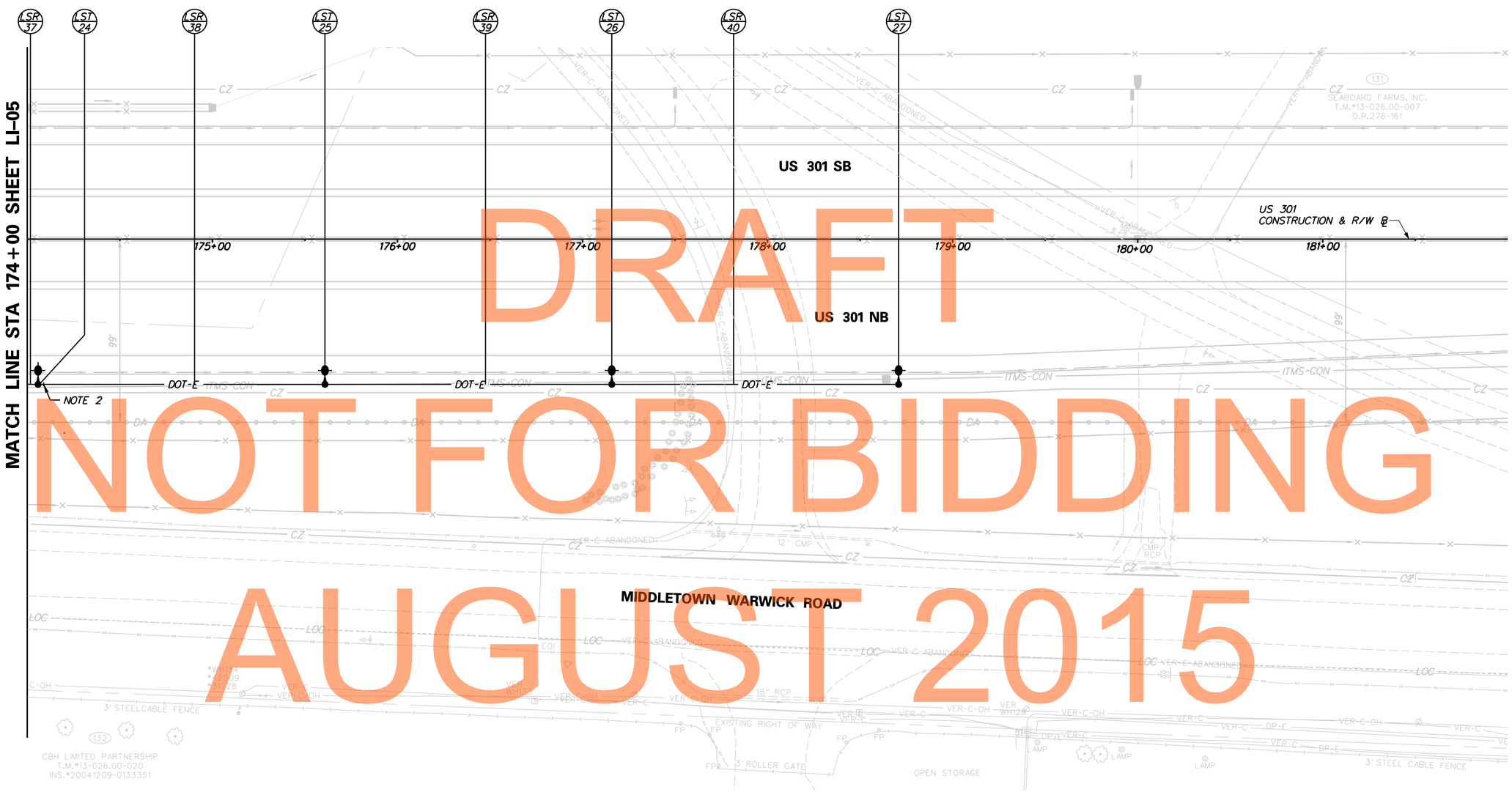

DRAFT
NOT FOR BIDDING
AUGUST 2015

NOTE:

1. LIGHTING SERVICE RUNS AND STANDARDS ARE SHOWN FOR INFORMATION ONLY AND ARE TO BE INSTALLED UNDER CONTRACT T200911303.

2. LEAVE CONDUIT STUB EXTENDING 3'-0" FROM POLE FOUNDATION TO ALLOW FOR FUTURE CONNECTION OF POLES LST-25, LST-26, AND LST-27 UNDER CONTRACT T200911303.

LI-06

DELAWARE DEPARTMENT OF TRANSPORTATION	ADDENDUMS / REVISIONS	SCALE 0 30 60 90 FEET	US 301 MARYLAND STATE LINE TO LEVELS ROAD	CONTRACT T200811301	BRIDGE NO.	LIGHTING PLAN	SHEET NO. 671
				COUNTY NEW CASTLE	DESIGNED BY: ML		TOTAL SHTS. 850
					CHECKED BY: JM		

J:\2008 PROJECTS\E3X34801\700CADD\750AET\LIGHT\LI_301AET_006.DGN

LIGHTING STANDARD SCHEDULE

NO.	CIRCUIT NO.	STATION	OFFSET	ARM	LIGHT STANDARD
28	SB-6	230+31	78.5 LT.	8	40FT W/250W HPS COBRA
29	SB-4	231+94	78.5 LT.	8	40FT W/250W HPS COBRA
30	SB-2	233+56	78.5 LT.	8	40FT W/250W HPS COBRA
31	SB-6	235+18	78.5 LT.	8	40FT W/250W HPS COBRA
37	SB-4	236+81	78.5 LT.	8	40FT W/250W HPS COBRA
38	NB-4	237+52	78.5 RT.	8	40FT W/250W HPS COBRA

LIGHTING SERVICE SCHEDULE

SERVICE RUN	DISTANCE (L.F.)	DESCRIPTION	INSTALLATION
41	165.0	4 #6 & 1 #6 GND IN 4" SCH 80 PVC CONDUIT	TRENCH
42	165.0	4 #6 & 1 #6 GND IN 4" SCH 80 PVC CONDUIT	TRENCH
43	165.0	4 #6 & 1 #6 GND IN 4" SCH 80 PVC CONDUIT	TRENCH
44	165.0	4 #6 & 1 #6 GND IN 4" SCH 80 PVC CONDUIT	TRENCH
76	164.9	4 #6 & 1 #6 GND IN 4" SCH 80 PVC CONDUIT	TRENCH
77	160.0	4 #6 & 1 #6 GND IN 4" SCH 80 PVC CONDUIT	TRENCH

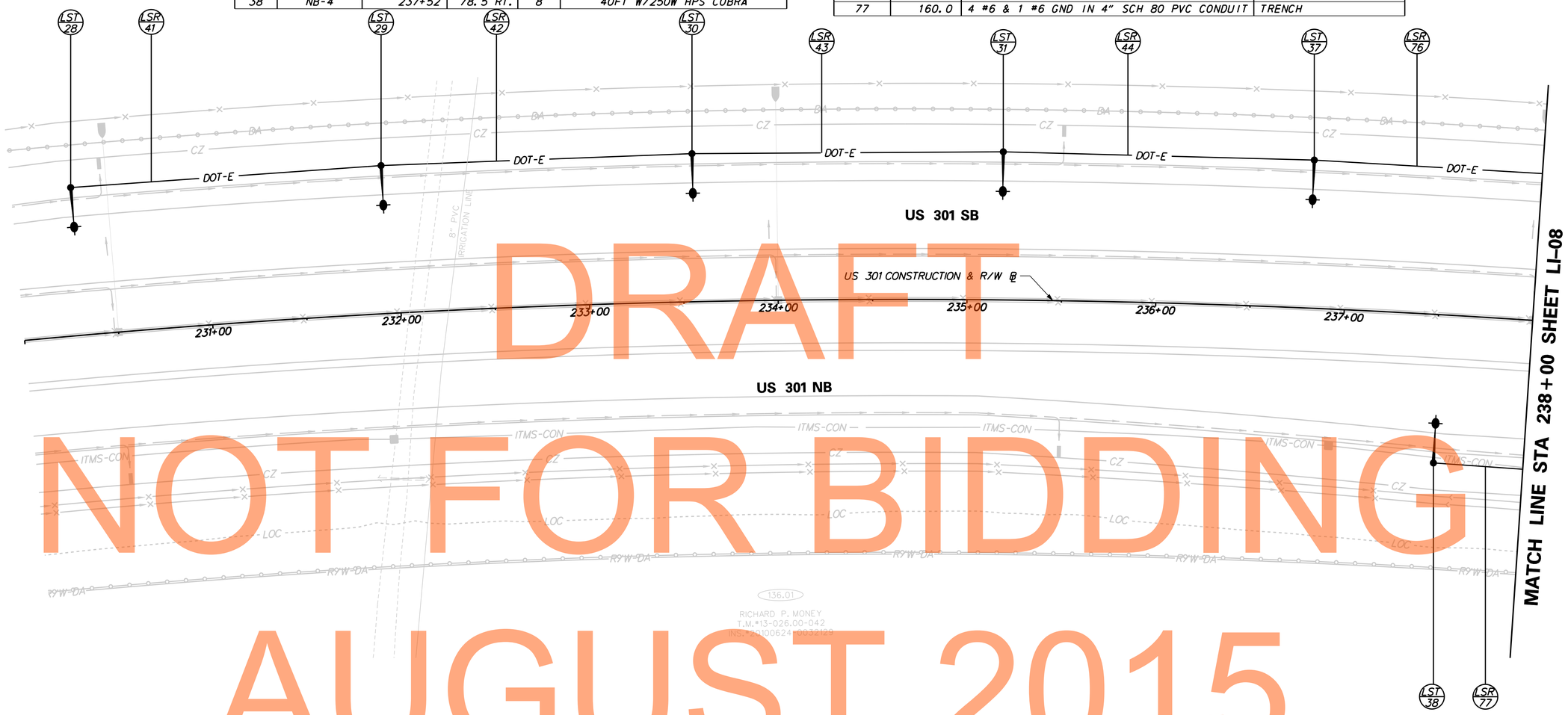

DRAFT
NOT FOR BIDDING
AUGUST 2015

J:\2008 PROJECTS\E3X34801\700CADD\750AET\LIGHT\LI_301AET_007.DGN

LI-07

DELAWARE DEPARTMENT OF TRANSPORTATION	ADDENDUMS / REVISIONS	SCALE 0 30 60 90 FEET	US 301 MARYLAND STATE LINE TO LEVELS ROAD	CONTRACT T200811301	BRIDGE NO.	LIGHTING PLAN	SHEET NO. 672
				COUNTY NEW CASTLE	DESIGNED BY: ML		TOTAL SHTS. 850
					CHECKED BY: JM		

LIGHTING STANDARD SCHEDULE

NO.	CIRCUIT NO.	STATION	OFFSET	ARM	LIGHT STANDARD
39	SB-2	238+43	78.5 LT.	8	40FT W/250W HPS COBRA
40	SB-6	240+08	83.5 LT.	8	40FT W/250W HPS COBRA
41	SB-4	241+73	78.5 LT.	8	40FT W/250W HPS COBRA
42	SB-2	413+84	31.2 RT.	8	40FT W/250W HPS COBRA
43	SB-6	412+66	30.7 RT.	8	40FT W/250W HPS COBRA
44	SB-2	245+53	66.5 LT.	8	40FT W/250W HPS COBRA

LIGHTING SERVICE SCHEDULE

SERVICE RUN	DISTANCE (L.F.)	DESCRIPTION	INSTALLATION
78	165.2	4 #6 & 1 #6 GND IN 4" SCH 80 PVC CONDUIT	TRENCH
79	165.0	4 #6 & 1 #6 GND IN 4" SCH 80 PVC CONDUIT	TRENCH
80	160.0	4 #6 & 1 #6 GND IN 4" SCH 80 PVC CONDUIT	TRENCH
81	115.1	4 #6 & 1 #6 GND IN 4" SCH 80 PVC CONDUIT	TRENCH
82	102.3	4 #6 & 1 #6 GND IN 4" SCH 80 PVC CONDUIT	TRENCH
83	35.3	4 #6 & 1 #6 GND IN 4" SCH 80 PVC CONDUIT	TRENCH
84	19.0	2 #6 & 1 #6 GND IN 4" SCH 80 PVC CONDUIT	TRENCH
85	224.7	4 #6 & 1 #6 GND IN 4" SCH 80 PVC CONDUIT	TRENCH
86	70.7	4 #6 & 1 #6 GND IN 4" SCH 80 PVC CONDUIT	TRENCH

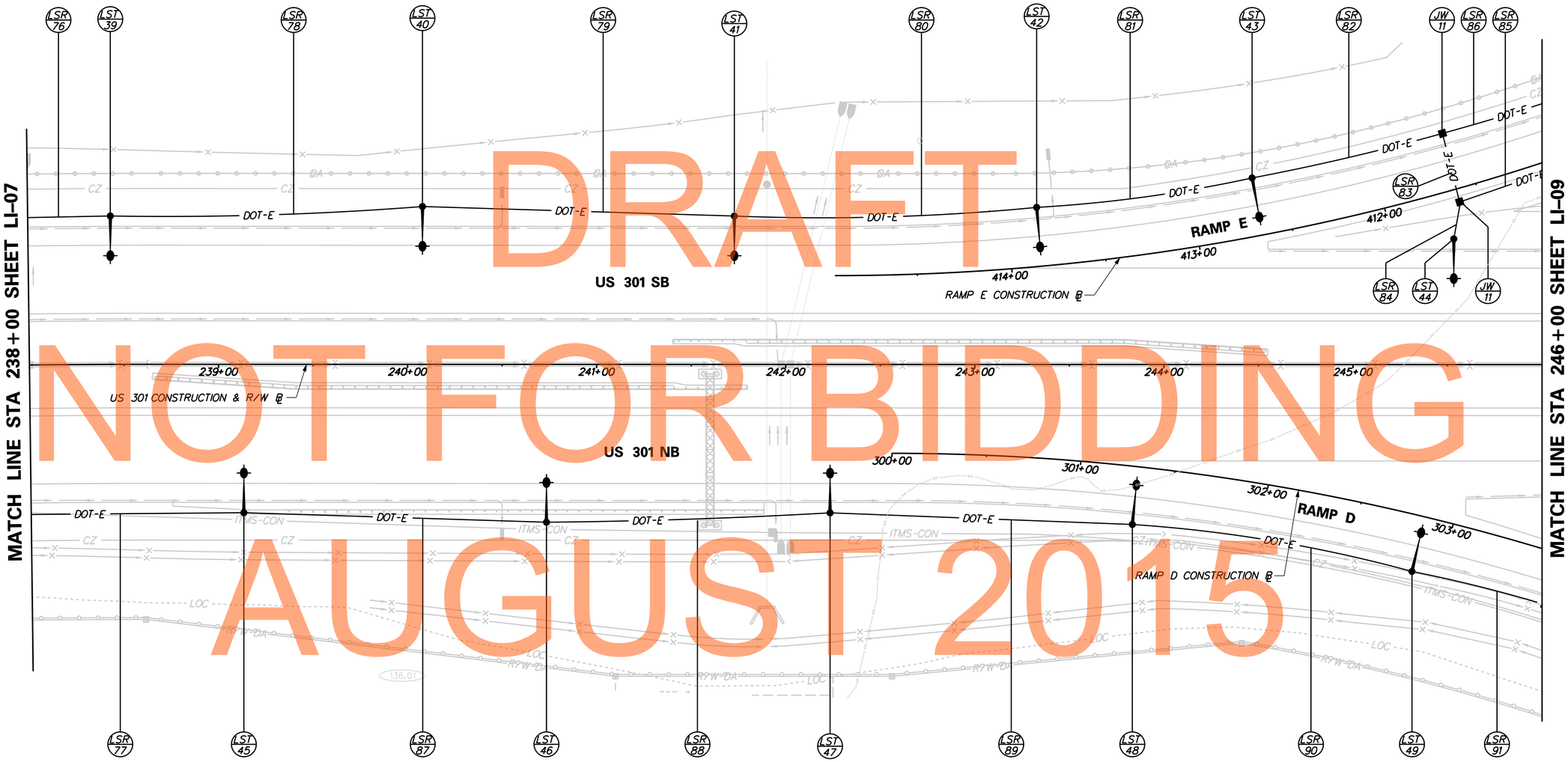

DRAFT
NOT FOR BIDDING
AUGUST 2015

LIGHTING STANDARD SCHEDULE

NO.	CIRCUIT NO.	STATION	OFFSET	ARM	LIGHT STANDARD
45	NB-2	239+13	78.5 RT.	8	40FT W/250W HPS COBRA
46	NB-6	240+73	83.5 RT.	8	40FT W/250W HPS COBRA
47	NB-4	242+23	78.5 RT.	8	40FT W/250W HPS COBRA
48	NB-2	301+31	30.7 RT.	8	40FT W/250W HPS COBRA
49	NB-6	302+85	29.7 RT.	8	40FT W/250W HPS COBRA

LIGHTING SERVICE SCHEDULE

SERVICE RUN	DISTANCE (L.F.)	DESCRIPTION	INSTALLATION
87	160.0	4 #6 & 1 #6 GND IN 4" SCH 80 PVC CONDUIT	TRENCH
88	150.0	4 #6 & 1 #6 GND IN 4" SCH 80 PVC CONDUIT	TRENCH
89	160.0	4 #6 & 1 #6 GND IN 4" SCH 80 PVC CONDUIT	TRENCH
90	150.2	4 #6 & 1 #6 GND IN 4" SCH 80 PVC CONDUIT	TRENCH
91	100.0	4 #6 & 1 #6 GND IN 4" SCH 80 PVC CONDUIT	TRENCH

LI-08

DELAWARE DEPARTMENT OF TRANSPORTATION

ADDENDUMS / REVISIONS

SCALE 0 30 60 90 FEET

US 301
MARYLAND STATE LINE
TO LEVELS ROAD

CONTRACT	BRIDGE NO.
T200811301	DESIGNED BY: ML
COUNTY	CHECKED BY: JM
NEW CASTLE	

LIGHTING PLAN

SHEET NO. 673
TOTAL SHTS. 850

J:±8 PROJECTS\E3X34801\700CADD\702ROAD\LIGHT\LI_301DS3_008.DGN

LIGHTING STANDARD SCHEDULE					
NO.	CIRCUIT NO.	STATION	OFFSET	ARM	LIGHT STANDARD
50	SB-4	410+86	29.4 RT.	8	40FT W/250W HPS COBRA
51	NB-4	246+39	74.4 RT.	8	40FT W/250W HPS COBRA
52	NB-2	304+39	28.6 RT.	8	40FT W/250W HPS COBRA

LIGHTING SERVICE SCHEDULE			
SERVICE RUN	DISTANCE (L.F.)	DESCRIPTION	INSTALLATION
92	31.7	4 #6 & 1 #6 GND IN 4" SCH 80 PVC CONDUIT	TRENCH
93	31.3	2 #6 & 1 #6 GND IN 4" SCH 80 PVC CONDUIT	TRENCH
94	48.3	4 #6 & 1 #6 GND IN 4" SCH 80 PVC CONDUIT	TRENCH
95	80.3	4 #6 & 1 #6 GND IN 4" SCH 80 PVC CONDUIT	TRENCH
96	226.0	4 #6 & 1 #6 GND IN 4" SCH 80 PVC CONDUIT	TRENCH

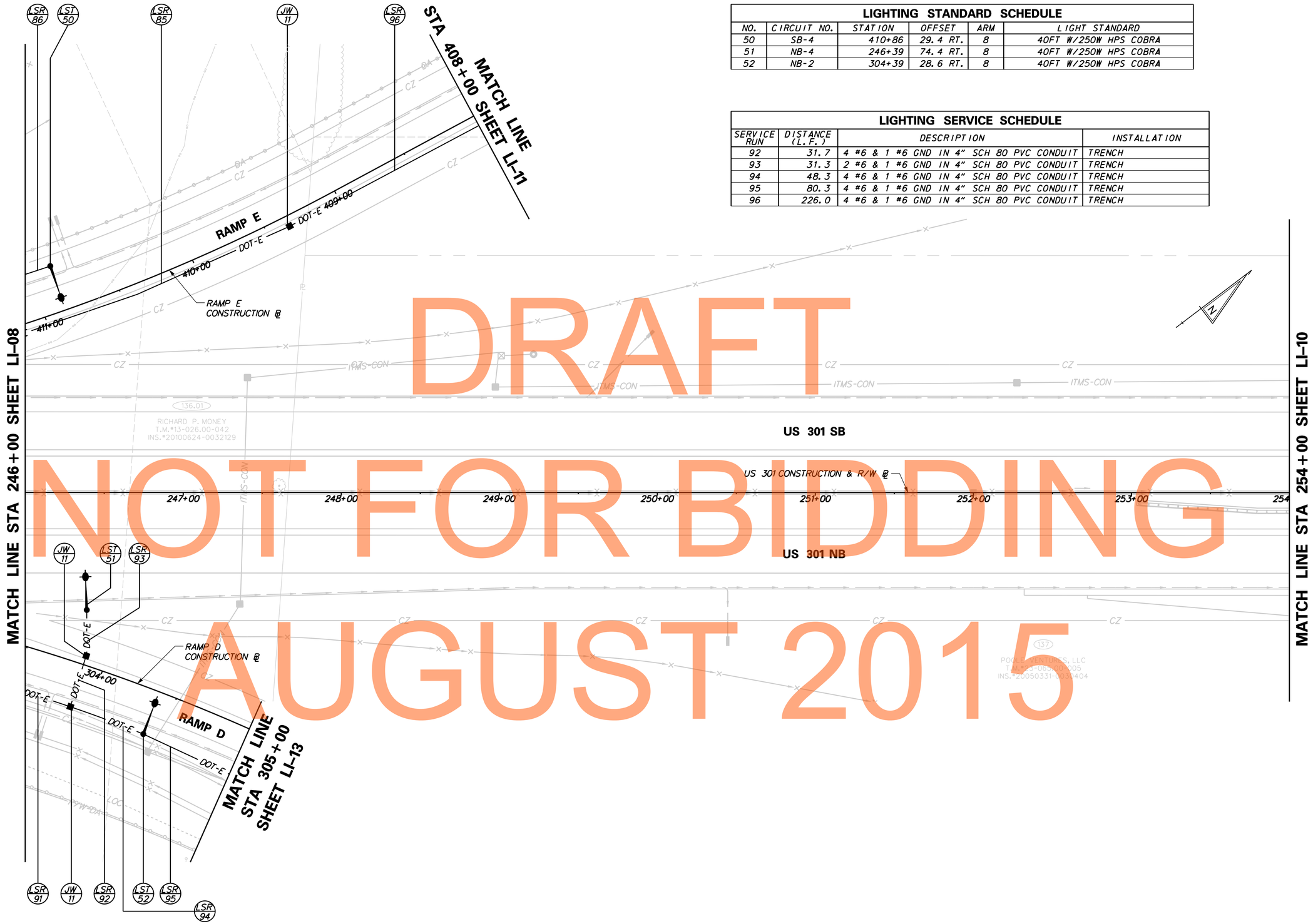

DRAFT
NOT FOR BIDDING
AUGUST 2015

LI-09

DELAWARE DEPARTMENT OF TRANSPORTATION

ADDENDUMS / REVISIONS

SCALE 0 30 60 90 FEET

US 301
MARYLAND STATE LINE
TO LEVELS ROAD

CONTRACT	BRIDGE NO.	
T200811301	DESIGNED BY: ML	
COUNTY		
NEW CASTLE	CHECKED BY: JM	

LIGHTING PLAN

SHEET NO.
674
TOTAL SHTS.
850

J:\2008 PROJECTS\E3X3480T\700CADD\750AET\LIGHT\LI_301AET_009.DGN

MATCH LINE STA 1294+00 SHEET LI-12

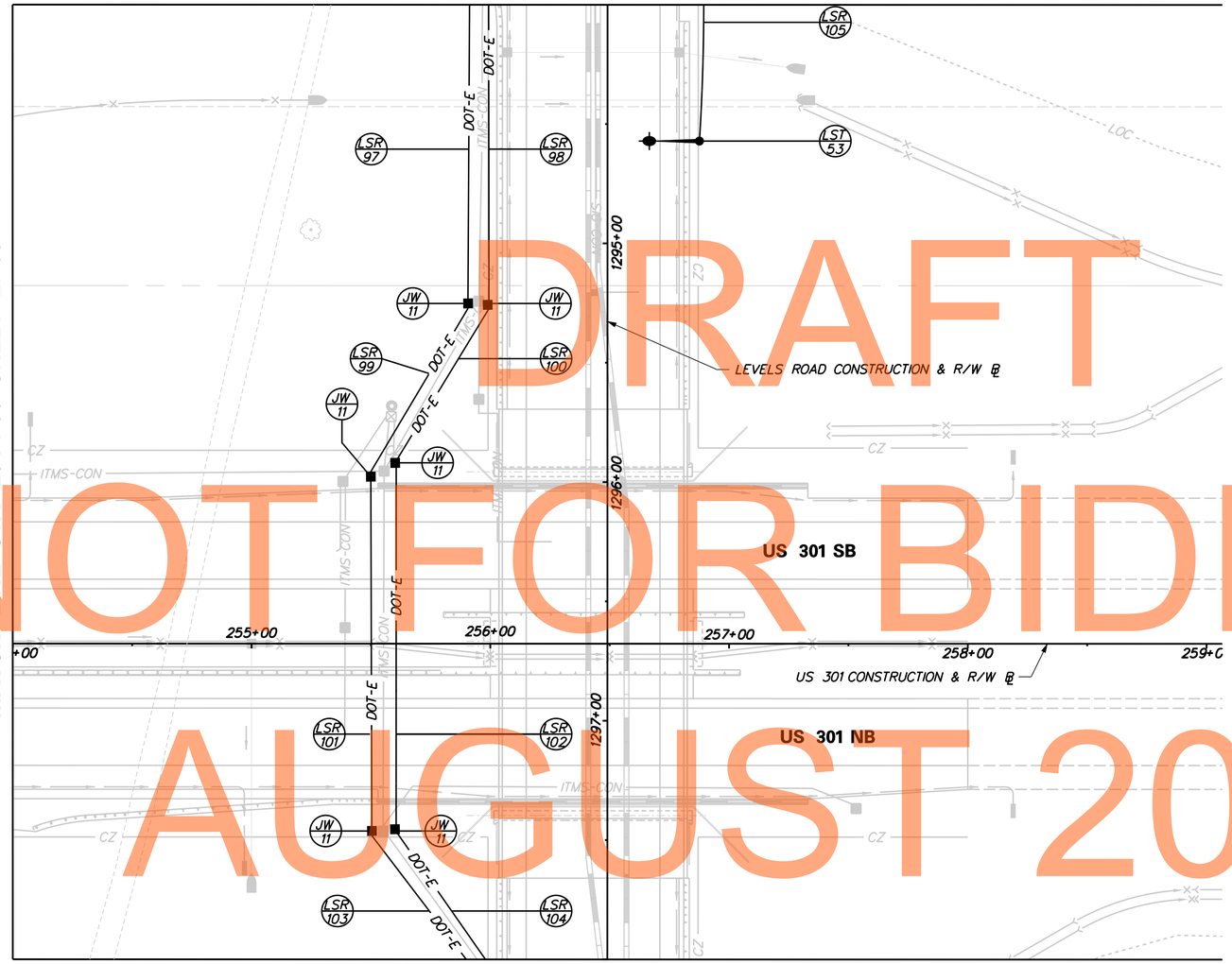

MATCH LINE STA 254+00 SHEET LI-09

MATCH LINE STA 1298+00 SHEET LI-14

LIGHTING STANDARD SCHEDULE					
NO.	CIRCUIT NO.	STATION	OFFSET	ARM	LIGHT STANDARD
53	SB-7	1294+57	38.5 LT.	8	30FT W/150W HPS COBRA

LIGHTING SERVICE SCHEDULE			
SERVICE RUN	DISTANCE (L.F.)	DESCRIPTION	INSTALLATION
97	231.2	2 #4, 2 #2 & 1 #2 GND IN 4" SCH 80 PVC CONDUIT ITMS CKTS 2,5	TRENCH
98	231.2	4 #2/0 AND 1 #2/0 GND IN 4" SCH 80 PVC CONDUIT FEED TO LIGHTING DISTRIBUTION CAB. #2	TRENCH
99	74.4	2 #4, 2 #2 & 1 #2 GND IN 4" SCH 80 PVC CONDUIT ITMS CKTS 2,5	TRENCH
100	74.4	4 #2/0 & 1 #2/0 GND IN 4" SCH 80 PVC CONDUIT FEED TO LIGHTING DISTRIBUTION CAB. #2	TRENCH
101	150.8	2 #4, 2 # 2/0 & 1 #2/0 GND IN 4" SCH 80 PVC CONDUIT ITMS CKTS 2,4,5	TRENCH
102	150.8	4 #2/0 & 1 #2/0 GND IN 4" SCH 80 PVC CONDUIT FEED TO LIGHTING DISTRIBUTION CAB. #2	TRENCH
103	72.0	2 #4, 2 # 2/0 & 1 #2/0 GND IN 4" SCH 80 PVC CONDUIT ITMS CKTS 2,4,5	TRENCH
104	72.0	4 #2/0 & 1 #2/0 GND IN 4" SCH 80 PVC CONDUIT FEED TO LIGHTING DISTRIBUTION CAB. #2	TRENCH
105	153.0	2 #8 & 1 #8 GND IN 4" SCH 80 PVC CONDUIT	TRENCH

DRAFT
NOT FOR BIDDING
AUGUST 2015

J:\2008 PROJECTS\E3X34801\700CADD\750AET\LIGHT\LI_301AET_010.DGN

LI-10

DELAWARE DEPARTMENT OF TRANSPORTATION

ADDENDUMS / REVISIONS

SCALE 0 30 60 90 FEET

US 301
MARYLAND STATE LINE
TO LEVELS ROAD

CONTRACT	BRIDGE NO.	
T200811301	DESIGNED BY: ML	
COUNTY		
NEW CASTLE	CHECKED BY: JM	

LIGHTING PLAN

SHEET NO. 675
TOTAL SHTS. 850

LIGHTING STANDARD SCHEDULE					
NO.	CIRCUIT NO.	STATION	OFFSET	ARM	LIGHT STANDARD
54	SB-7	402+64	27.5 RT.	8	30FT W/150W HPS COBRA

LIGHTING SERVICE SCHEDULE			
SERVICE RUN	DISTANCE (L.F.)	DESCRIPTION	INSTALLATION
106	226.4	4 #6 & 1 #6 GND IN 4" SCH 80 PVC CONDUIT	TRENCH
107	227.3	4 #6 & 1 #6 GND IN 4" SCH 80 PVC CONDUIT	TRENCH
108	130.0	2 #6 & 1 #6 GND IN 4" SCH 80 PVC CONDUIT	TRENCH

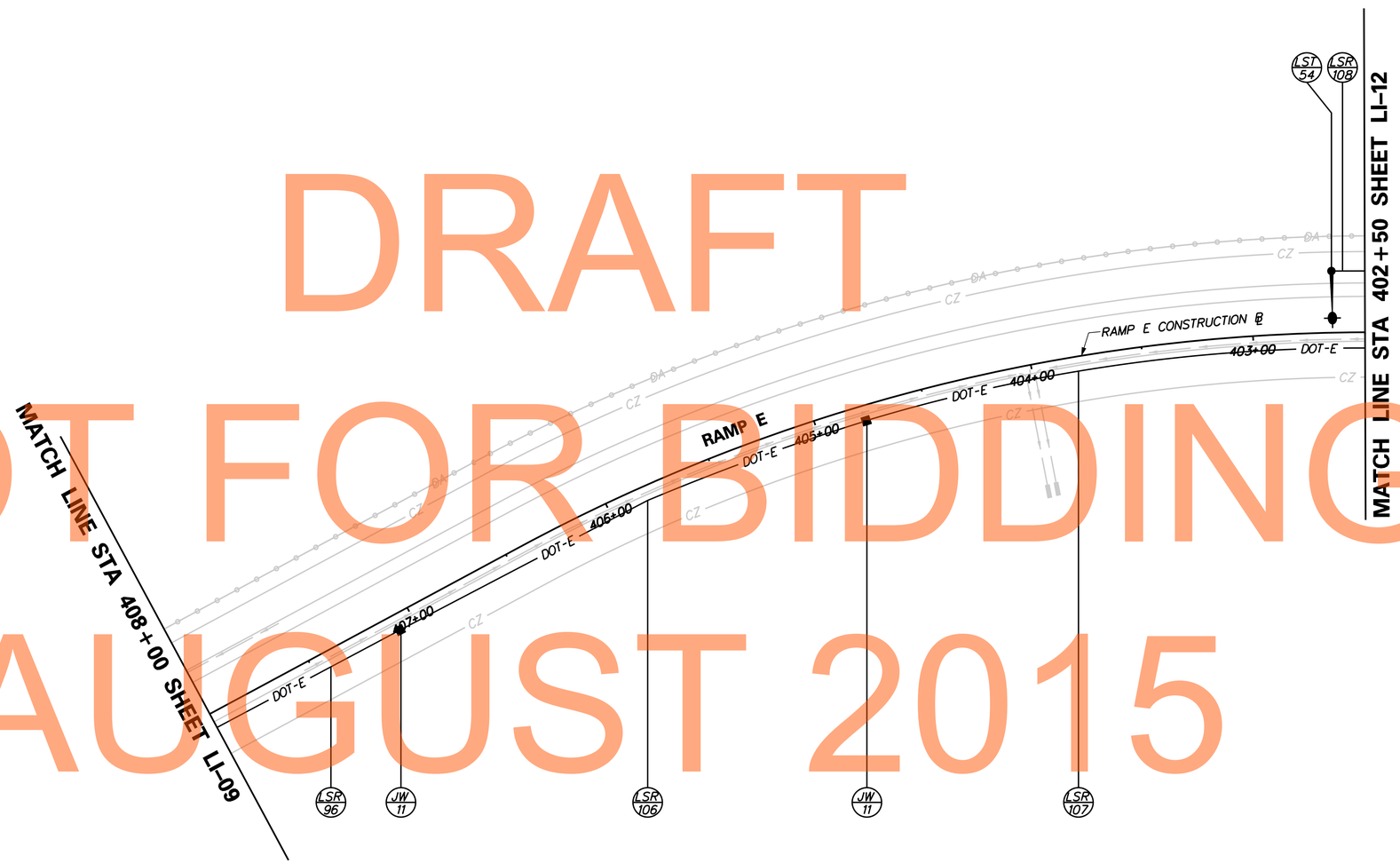

DRAFT
NOT FOR BIDDING
AUGUST 2015

J:\2008 PROJECTS\E3X34801\700CADD\750AET\LIGHT\LI_301AET_011.DGN

LI-11

DELAWARE DEPARTMENT OF TRANSPORTATION

ADDENDUMS / REVISIONS

SCALE 0 30 60 90 FEET

US 301 MARYLAND STATE LINE TO LEVELS ROAD

CONTRACT	BRIDGE NO.	
T200811301	DESIGNED BY: ML	
COUNTY		
NEW CASTLE	CHECKED BY: JM	

LIGHTING PLAN

SHEET NO. 676

TOTAL SHTS. 850

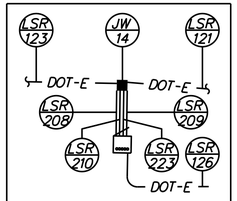

DETAIL "A"

NOTE:

1. CABLES FOR RAMP F LIGHTING TO BE LEFT CAPPED IN JUNCTION WELL. CONNECTION BY OTHERS. LR-SB CKTS #1, 3, 5
2. CABINET GROUND ROD TO BE LOCATED A MINIMUM DISTANCE OF 6' FROM NEARBY JUNCTION WELL GROUND RODS. GROUND RODS TO BE BONDED.
3. CABLES TO BE SPLICED FROM #2/0 TO #2 IN JUNCTION WELL.
4. SEE SS-25 FOR CONTINUATION OF ITMS SERVICES. CABLES AND CONNECTION OF ITMS EQUIPMENT TO BE DONE BY DELDOT TRAFFIC FORCES.

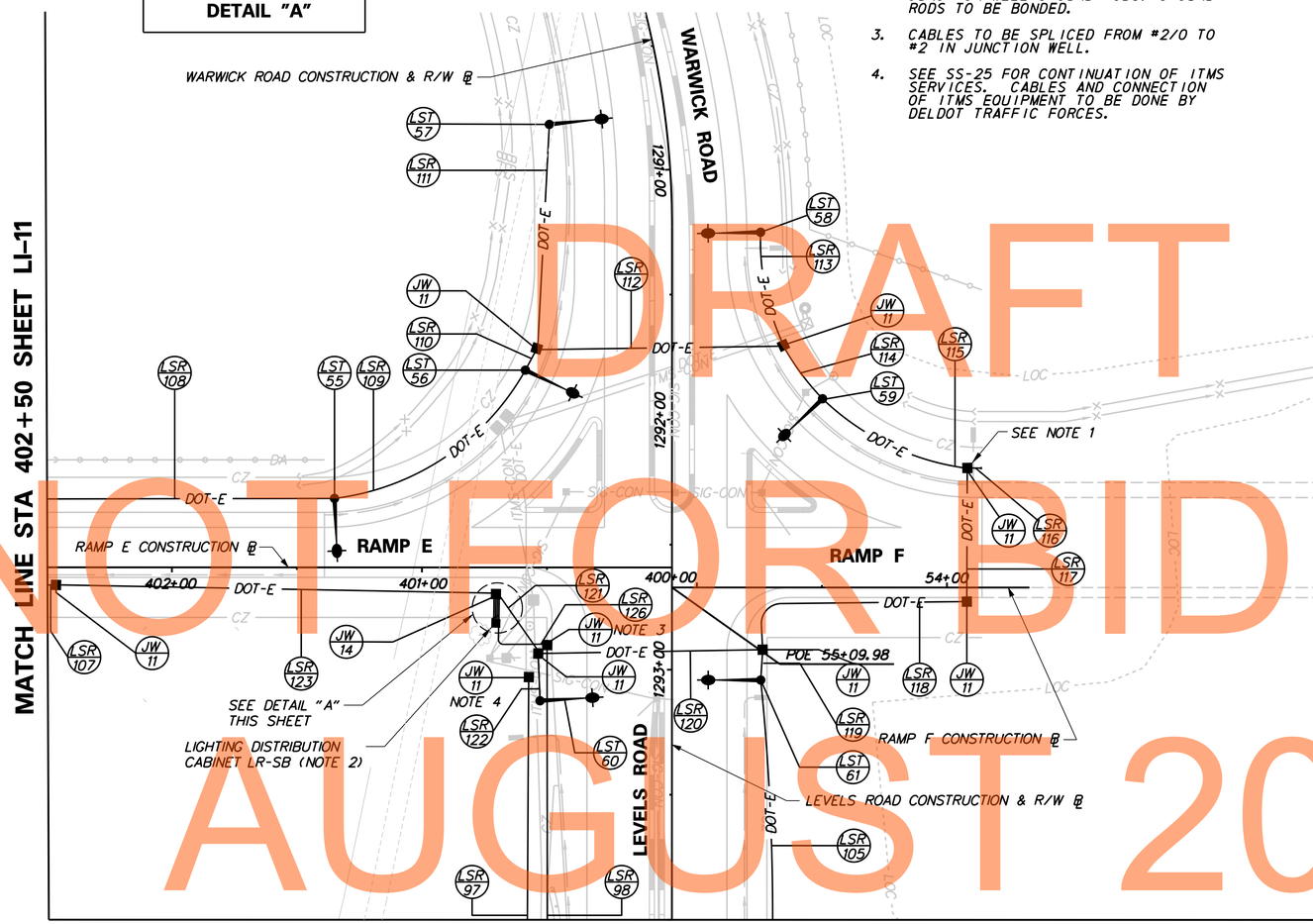

LIGHTING STANDARD SCHEDULE					
NO.	CIRCUIT NO.	STATION	OFFSET	ARM	LIGHT STANDARD
55	SB-9	401+35	27.6 RT.	8	30FT W/150W HPS COBRA
56	SB-7	1291+80	58.7 RT.	8	30FT W/150W HPS COBRA
57	SB-11	1290+76	46.3 RT.	8	30FT W/150W HPS COBRA
58	SB-9	1291+25	35.4 LT.	8	30FT W/150W HPS COBRA
59	SB-11	1291+92	60.2 LT.	8	30FT W/150W HPS COBRA
60	SB-11	1293+12	52.8 RT.	8	30FT W/150W HPS COBRA
61	SB-9	1293+04	35.5 LT.	8	30FT W/150W HPS COBRA

LIGHTING SERVICE SCHEDULE			
SERVICE RUN	DISTANCE (L.F.)	DESCRIPTION	INSTALLATION
109	95.0	4 #6 & 1 #6 GND IN 4" SCH 80 PVC CONDUIT	TRENCH
110	7.0	4 #6 & 1 #6 GND IN 4" SCH 80 PVC CONDUIT	TRENCH
111	90.0	2 #6 & 1 #6 GND IN 4" SCH 80 PVC CONDUIT	TRENCH
112	99.2	4 #6 & 1 #6 GND IN 4" SCH 80 PVC CONDUIT	TRENCH
113	45.5	2 #6 & 1 #6 GND IN 4" SCH 80 PVC CONDUIT	TRENCH
114	25.6	4 #6 & 1 #6 GND IN 4" SCH 80 PVC CONDUIT	TRENCH
115	64.3	4 #6 & 1 #6 GND IN 4" SCH 80 PVC CONDUIT	TRENCH
116	5.0	4" SCH 80 PVC CONDUIT - NOTE 1	TRENCH
117	51.4	4 #6, 4 #4 & 1 #4 GND IN 4" SCH 80 PVC CONDUIT LS-RB CKTS 1, 3, 5, 7, 9, 11	TRENCH
118	95.1	4 #6, 4 #4 & 1 #4 GND IN 4" SCH 80 PVC CONDUIT LS-RB CKTS 1, 3, 5, 7, 9, 11	TRENCH
119	13.6	4 #6 & 1 #6 GND IN 4" SCH 80 PVC CONDUIT	TRENCH
120	87.6	4 #6, 4 #4 & 1 #4 GND IN 4" SCH 80 PVC CONDUIT LS-RB CKTS 1, 3, 5, 7, 9, 11	TRENCH
121	27.7	4 #6, 4 #4 & 1 #4 GND IN 4" SCH 80 PVC CONDUIT LS-RB CKTS 1, 3, 5, 7, 9, 11	TRENCH
122	17.9	2 #6 & 1 #6 GND IN 4" SCH 80 PVC CONDUIT	TRENCH
123	173.9	4 #2 & 1 #2 GND IN 4" SCH 80 PVC CONDUIT	TRENCH
126	24.4	4 #2 & 1 #2 GND IN 4" SCH 80 PVC CONDUIT	TRENCH
208	9.2	4 #2 & 1 #2 GND IN 4" SCH 80 PVC CONDUIT LR-SB CKTS 2, 4, 6	TRENCH
209	9.2	4 #6, 4 #4 & 1 #4 GND IN 4" SCH 80 PVC LR-SB CKTS 1, 3, 5, 7, 9, 11	TRENCH
210	9.2	SPARE 4" SCH 80 PVC CONDUIT	TRENCH
223	9.2	SPARE 4" SCH 80 PVC CONDUIT	TRENCH

DRAFT
NOT FOR BIDDING
AUGUST 2013

LI-12

DELAWARE DEPARTMENT OF TRANSPORTATION

ADDENDUMS / REVISIONS

SCALE 0 30 60 90 FEET

US 301 MARYLAND STATE LINE TO LEVELS ROAD

CONTRACT	BRIDGE NO.	
T200811301	DESIGNED BY: ML	
COUNTY		
NEW CASTLE	CHECKED BY: JM	

LIGHTING PLAN

SHEET NO. 677
TOTAL SHTS. 850

J:\2008 PROJECTS\E3X34801\700CADD\750AET\LIGHT\LI_301AET_012.DGN

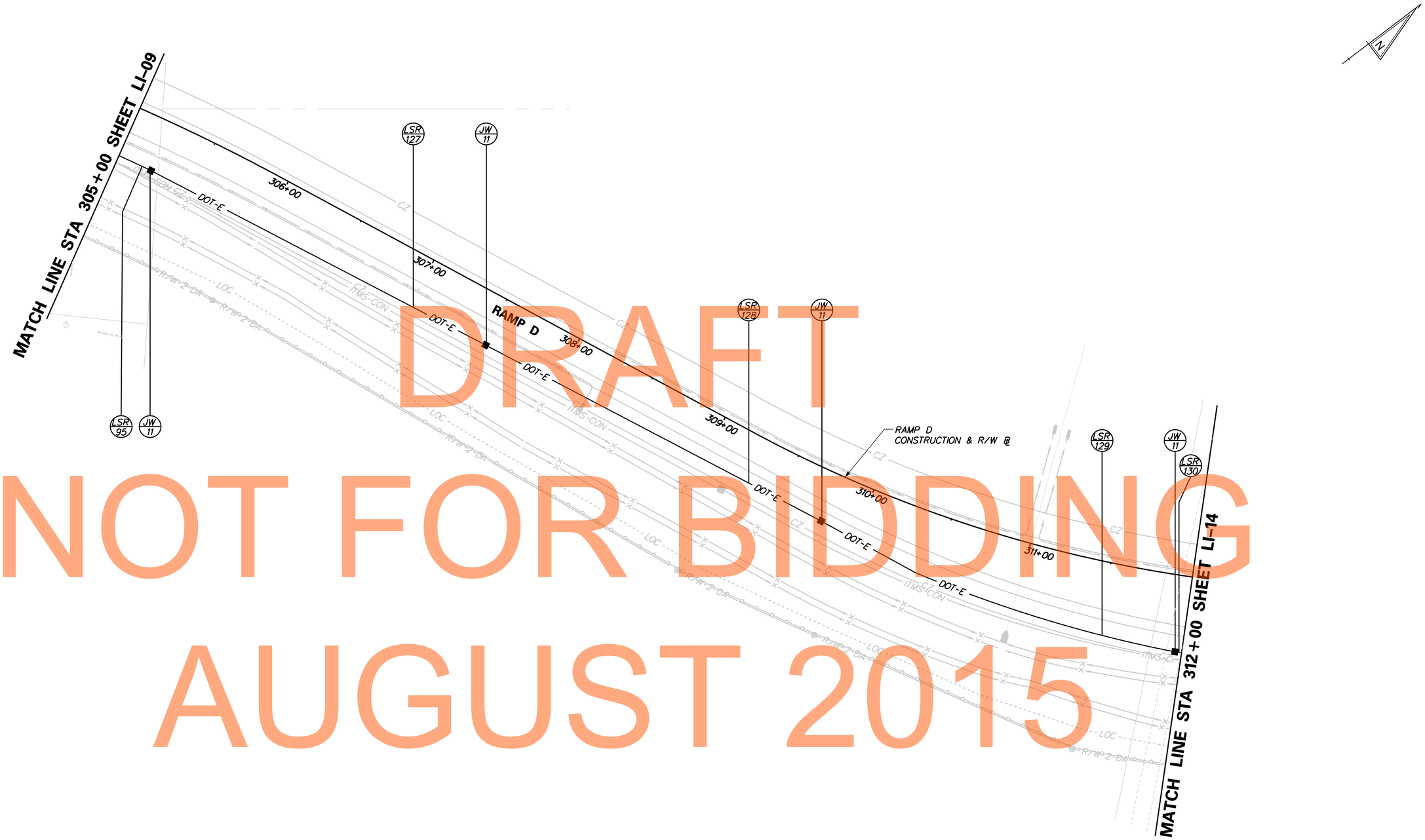

DRAFT
NOT FOR BIDDING
AUGUST 2015

LIGHTING SERVICE SCHEDULE

SERVICE RUN	DISTANCE (L.F.)	DESCRIPTION	INSTALLATION
127	226.0	4 #6 & 1 #6 GND IN 4" SCH 80 PVC CONDUIT	TRENCH
128	227.0	4 #6 & 1 #6 GND IN 4" SCH 80 PVC CONDUIT	TRENCH
129	227.0	4 #6 & 1 #6 GND IN 4" SCH 80 PVC CONDUIT	TRENCH
130	224.2	4 #6 & 1 #6 GND IN 4" SCH 80 PVC CONDUIT	TRENCH

LI-13

DELAWARE DEPARTMENT OF TRANSPORTATION

ADDENDUMS / REVISIONS

SCALE 0 30 60 90 FEET

US 301
MARYLAND STATE LINE
TO LEVELS ROAD

CONTRACT T200811301
COUNTY NEW CASTLE
BRIDGE NO.
DESIGNED BY: ML
CHECKED BY: JM

LIGHTING PLAN

SHEET NO. 678
TOTAL SHTS. 850

J:\2008 PROJECTS\E3X3480I\700CADD\750AET\LIGHT\LI_301AET_013.DGN

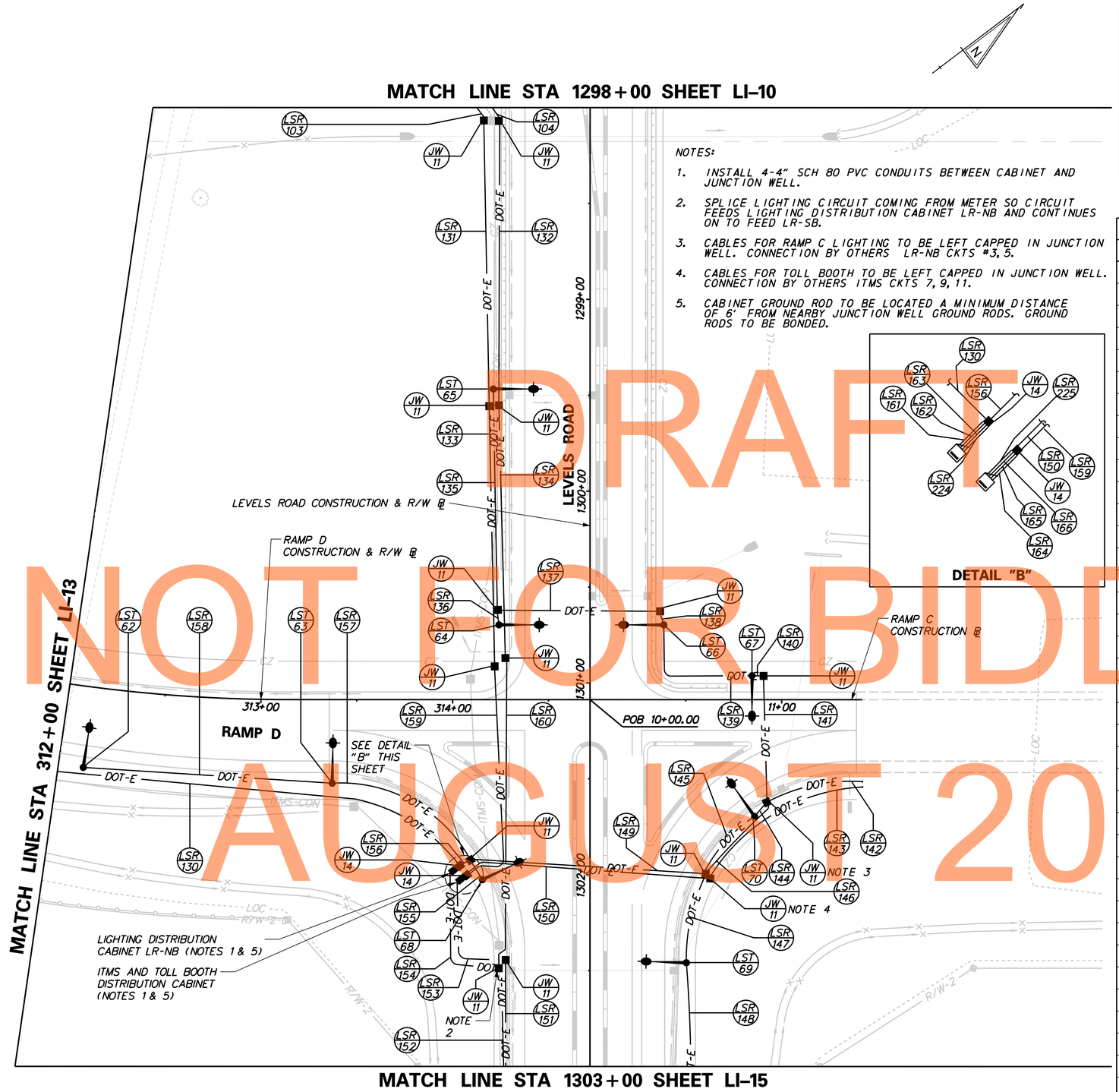

NOTES:

1. INSTALL 4-4" SCH 80 PVC CONDUITS BETWEEN CABINET AND JUNCTION WELL.
2. SPLICE LIGHTING CIRCUIT COMING FROM METER SO CIRCUIT FEEDS LIGHTING DISTRIBUTION CABINET LR-NB AND CONTINUES ON TO FEED LR-SB.
3. CABLES FOR RAMP C LIGHTING TO BE LEFT CAPPED IN JUNCTION WELL. CONNECTION BY OTHERS LR-NB CKTS #3, 5.
4. CABLES FOR TOLL BOOTH TO BE LEFT CAPPED IN JUNCTION WELL. CONNECTION BY OTHERS ITMS CKTS 7, 9, 11.
5. CABINET GROUND ROD TO BE LOCATED A MINIMUM DISTANCE OF 6' FROM NEARBY JUNCTION WELL GROUND RODS. GROUND RODS TO BE BONDED.

LIGHTING STANDARD SCHEDULE

NO.	CIRCUIT NO.	STATION	OFFSET	ARM	LIGHT STANDARD
62	NB-7	312+12	42.2 RT.	8	30FT W/150W HPS COBRA
63	NB-9	313+37	43.6 RT.	8	30FT W/150W HPS COBRA
64	NB-7	1300+70	47.5 RT.	8	30FT W/150W HPS COBRA
65	NB-11	1299+47	50.5 RT.	8	30FT W/150W HPS COBRA
66	NB-9	1300+70	38.5 LT.	8	30FT W/150W HPS COBRA
67	NB-11	10+85	12.5 LT.	8	30FT W/150W HPS COBRA
68	NB-11	1302+02	56.0 RT.	8	30FT W/150W HPS COBRA
69	NB-9	1302+46	50.3 LT.	8	30FT W/150W HPS COBRA
70	NB-7	10+86	60.9 LT.	8	30FT W/150W HPS COBRA

LIGHTING SERVICE SCHEDULE

SERVICE RUN	DISTANCE (L.F.)	DESCRIPTION	INSTALLATION
131	145.5	2 #4, 2 #2/0, & 1 #2/0 GND IN 4" SCH 80 PVC CONDUIT ITMS CKTS 2, 4, 5	TRENCH
132	145.5	4 #2/0, & 1 #2/0 GND IN 4" SCH 80 PVC CONDUIT FEED TO LIGHTING DISTRIBUTION CAB. #2	TRENCH
133	131.2	2 #4, 2 #2/0 AND 1 #2/0 GND IN 4" SCH 80 PVC CONDUIT ITMS CKTS 2, 4, 5	TRENCH
134	131.2	4 #2/0 & 1 #2/0 GND IN 4" SCH 80 PVC CONDUIT FEED TO LIGHTING DISTRIBUTION CAB. #2	TRENCH
135	114.4	2 #6 & 1 #6 GND IN 4" SCH 80 PVC CONDUIT	TRENCH
136	6.3	2 #6 & 1 #6 GND IN 4" SCH 80 PVC CONDUIT	TRENCH
137	82.3	4 #6 & 1 #6 GND IN 4" SCH 80 PVC CONDUIT	TRENCH
138	6.0	4 #6 & 1 #6 GND IN 4" SCH 80 PVC CONDUIT	TRENCH
139	71.0	4 #6 & 1 #6 GND IN 4" SCH 80 PVC CONDUIT	TRENCH
140	5.0	4 #6 & 1 #6 GND IN 4" SCH 80 PVC CONDUIT	TRENCH
141	67.4	4 #6 & 1 #6 GND IN 4" SCH 80 PVC CONDUIT	TRENCH
142	52.0	4" SCH 80 PVC CONDUIT	TRENCH
143	96.0	4" SCH 80 PVC CONDUIT	TRENCH
144	6.5	4 #6 & 1 #6 GND IN 4" SCH 80 PVC CONDUIT	TRENCH
145	39.2	4 #6 & 1 #6 GND IN 4" SCH 80 PVC CONDUIT	TRENCH
146	44.3	4 #4 & 1 #4 GND IN 4" SCH 80 PVC CONDUIT LR-NB CKTS 1, 3, 5	TRENCH
147	47.0	4 #6 & 1 #6 GND IN 4" SCH 80 PVC CONDUIT	TRENCH
148	147.2	2 #6 & 1 #6 GND IN 4" SCH 80 PVC CONDUIT	TRENCH
149	121.0	4 #4, 4 #6 & 1 #4 GND IN 4" SCH 80 PVC CONDUIT LR-NB CKTS 1, 3, 5, 7, 9, 11	TRENCH
150	127.6	4 #2/0 & 1 #2/0 GND IN 4" SCH 80 PVC CONDUIT ITMS CKTS 7, 9, 11	TRENCH
151	230.4	4 #350 KCMIL & 1 #350 KCMIL GND IN 4" SCH 80 PVC CONDUIT	TRENCH
152	230.4	4 #4/0 & 1 #4/0 GND IN 4" SCH 80 PVC CONDUIT	TRENCH
153	64.0	4 #4/0 & 1 #4/0 GND IN 4" SCH 80 PVC CONDUIT	TRENCH
154	74.0	4 #2 & 1 #2 GND IN 4" SCH 80 PVC CONDUIT	TRENCH
155	11.0	2 #6 & 1 #6 GND IN 4" SCH 80 PVC CONDUIT	TRENCH
156	4.2	4 #6, 4 #4 & 1 #4 GND IN 4" SCH 80 PVC CONDUIT LR-NB CKTS 2, 4, 6, 7, 9, 11	TRENCH
157	86.0	4 #6 & 1 #6 GND IN 4" SCH 80 PVC CONDUIT	TRENCH
158	130.0	2 #6 & 1 #6 GND IN 4" SCH 80 PVC CONDUIT	TRENCH
159	123.4	2 #6, 2 #4, 2 #2/0 & 1 #2/0 GND IN 4" SCH 80 PVC CONDUIT ITMS CKTS 6, 2, 4, 5	TRENCH
160	154.4	4 #2/0 & 1 #2/0 GND IN 4" SCH 80 PVC CONDUIT FEED TO LIGHTING DISTRIBUTION CAB. #2	TRENCH
161	4.5	4 #6, 4 #6, 4 #4 & 1 #4 GND IN 4" SCH 80 PVC CONDUIT LR-NB CKTS 2, 4, 6, 7, 9, 11, 1, 3, 5	TRENCH
162	4.5	SPARE 4" SCH 80 PVC CONDUIT	TRENCH
163	4.5	SPARE 4" SCH 80 PVC CONDUIT	TRENCH
164	4.5	4 #2/0, 2 #2/0 & 1 #2/0 GND IN 4" SCH 80 PVC CONDUIT ITMS CKTS 7, 9, 11, 4	TRENCH
165	4.5	2 #6, 2 #4, 2 #2/0 & 1 #2/0 GND IN 4" SCH 80 PVC CON. ITMS CKTS 6, 2, 5	TRENCH
166	4.5	SPARE 4" SCH 80 PVC CONDUIT	TRENCH
224	4.5	SPARE 4" SCH 80 PVC CONDUIT	TRENCH
225	4.5	SPARE 4" SCH 80 PVC CONDUIT	TRENCH

DRAFT
NOT FOR BIDDING
AUGUST 2015

LI-14

DELAWARE DEPARTMENT OF TRANSPORTATION

ADDENDUMS / REVISIONS

SCALE 0 30 60 90 FEET

US 301 MARYLAND STATE LINE TO LEVELS ROAD

CONTRACT	BRIDGE NO.	
T200811301	DESIGNED BY: ML	
COUNTY		
NEW CASTLE	CHECKED BY: JM	

LIGHTING PLAN

SHEET NO. 679 TOTAL SHTS. 850

J:\2008 PROJECTS\E3X348O1\700CADD\750AET\LIGHT\LI_301AET_014.DGN

LIGHTING STANDARD SCHEDULE					
NO.	CIRCUIT NO.	STATION	OFFSET	ARM	LIGHT STANDARD
71	NB-11	1303+93	47.5 LT.	8	30FT W/150W HPS COBRA

LIGHTING SERVICE SCHEDULE			
SERVICE RUN	DISTANCE (L.F.)	DESCRIPTION	INSTALLATION
167	92.7	4 #350 KCMIL & 1 #350 KCMIL GND IN 4"SCH 80 PVC CONDUIT	TRENCH
168	92.7	4 #4/0 & 1 #4/0 GND IN 4" SCH 80 PVC CONDUIT	TRENCH
169	242.2	4 #350 KCMIL & 1 #350 KCMIL GND IN 4"SCH 80 PVC CONDUIT	TRENCH
170	242.2	4 #4/0 & 1 #4/0 GND IN 4" SCH 80 PVC CONDUIT	TRENCH
171	218.7	4 #350 KCMIL & 1 #350 KCMIL GND IN 4"SCH 80 PVC CONDUIT	TRENCH
172	218.7	4 #4/0 & 1 #4/0 GND IN 4" SCH 80 PVC CONDUIT	TRENCH
173	246.6	4 #350 KCMIL & 1 #350 KCMIL GND IN 4"SCH 80 PVC CONDUIT	TRENCH
174	239.7	4 #4/0 & 1 #4/0 GND IN 4" SCH 80 PVC CONDUIT	TRENCH

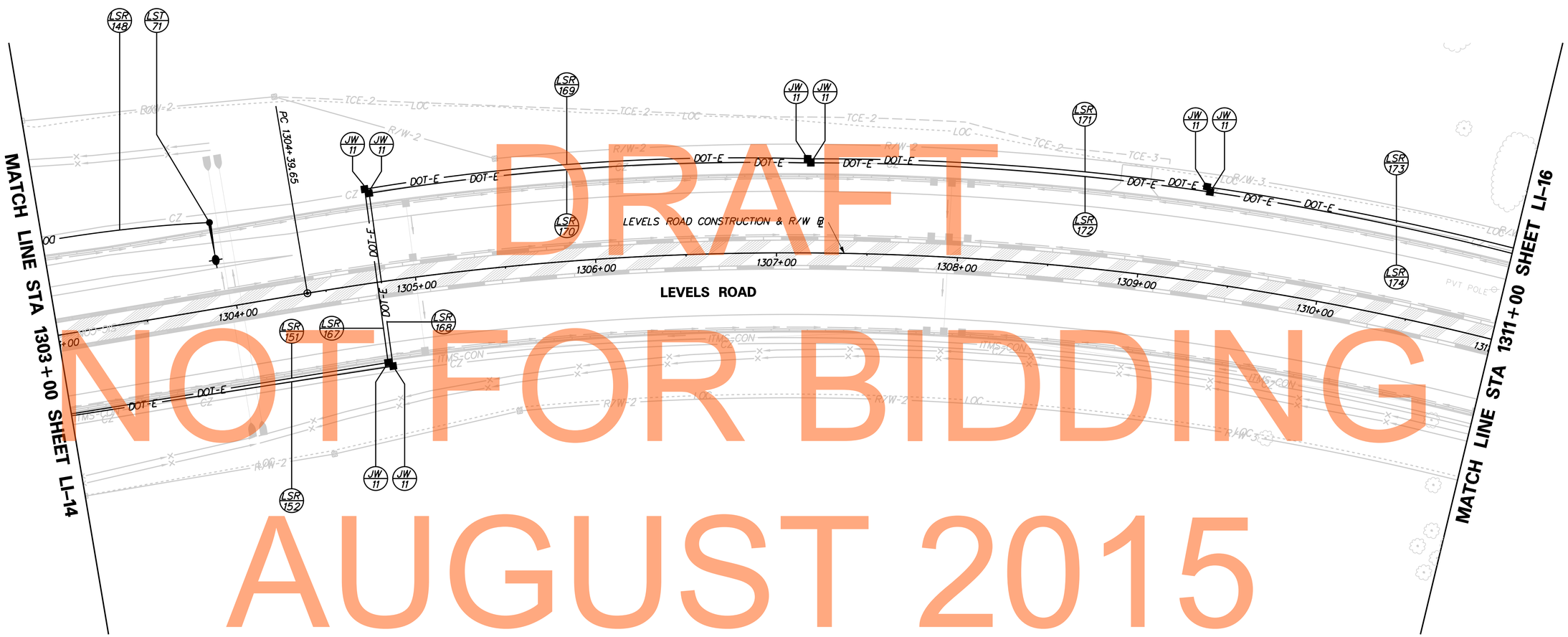

LI-15

DELAWARE DEPARTMENT OF TRANSPORTATION

ADDENDUMS / REVISIONS

SCALE 0 30 60 90 FEET

US 301 MARYLAND STATE LINE TO LEVELS ROAD

CONTRACT	BRIDGE NO.	
T200811301	DESIGNED BY: ML	
COUNTY		
NEW CASTLE	CHECKED BY: JM	

LIGHTING PLAN

SHEET NO.
680
TOTAL SHTS.
850

J:\2008 PROJECTS\E3X3480I\700CADD\750AET\LIGHT\LI_301AET_015.DGN

LIGHTING SERVICE SCHEDULE

SERVICE RUN	DISTANCE (L.F.)	DESCRIPTION	INSTALLATION
175	240.0	4 #350 KCMIL & 1 #350 KCMIL GND IN 4"SCH 80 PVC CONDUIT	TRENCH
176	240.0	4 #4/0 & 1 4/0 GND IN 4" SCH 80 PVC CONDUIT	TRENCH
177	232.0	4 #350 KCMIL & 1 #350 KCMIL GND IN 4"SCH 80 PVC CONDUIT	TRENCH
178	232.0	4 #4/0 & 1 #4/0 GND IN 4" SCH 80 PVC CONDUIT	TRENCH
179	8.6	2 #6 & 1 #6 GND IN 4" SCH 80 PVC CONDUIT	TRENCH
180	102.0	4 #350 KCMIL & 1 #350 KCMIL GND IN 4"SCH 80 PVC CONDUIT	TRENCH
181	105.0	4 #4/0 & 1 #4/0 GND IN 4" SCH 80 PVC CONDUIT	TRENCH
182	108.4	4 #6 & 1 #6 GND IN 4" SCH 80 PVC CONDUIT	TRENCH
183	5.6	4 #350 KCMIL & 1 #350 KCMIL GND IN 4" GALV. CONDUIT	TRENCH
184	6.8	4 #4/0 & 1 #4/0 GND IN 4" GALV. CONDUIT	TRENCH
185	13.0	4" GALV. CONDUIT - NOTE 4	TRENCH
186	9.0	4" GALV. CONDUIT - NOTE 4	TRENCH
187	183.6	4 #6 & 1 #6 GND IN 4" SCH 80 PVC CONDUIT	TRENCH
*188	51.5	2 #6 & 1 #6 GND IN EXISTING CONDUIT	
189	43.2	2 #6 & 1 #6 GND IN 4" SCH 80 PVC CONDUIT	TRENCH
190	6.0	2 #6 & 1 #6 GND IN 4" SCH 80 PVC CONDUIT	TRENCH
191	15.0	4 #6 & 1 #6 GND IN 4" SCH 80 PVC CONDUIT	TRENCH
192	172.9	4 #6 & 1 #6 GND IN 4" SCH 80 PVC CONDUIT	TRENCH
*193	91.5	4 #6 & 1 #6 GND IN EXISTING CONDUIT	
194	20.0	2 #6 & 1 #6 GND IN 4" SCH 80 PVC CONDUIT	TRENCH
*195	99.6	4 #6 & 1 #6 GND IN EXISTING CONDUIT	
*196	153.2	4 #6 & 1 #6 GND IN EXISTING CONDUIT	
*197	126.0	4 #6 & 1 #6 GND IN EXISTING CONDUIT	
198	9.4	2 #6 & 1 #6 GND IN 4" SCH 80 PVC CONDUIT	TRENCH
199	108.0	4 #6 & 1 #6 GND IN 4" SCH 80 PVC CONDUIT	TRENCH
200	17.2	4 #6 & 1 #6 GND IN 4" SCH 80 PVC CONDUIT	TRENCH
201	177.0	4 #6 & 1 #6 GND IN 4" SCH 80 PVC CONDUIT	TRENCH
202	184.0	4 #6 & 1 #6 GND IN 4" SCH 80 PVC CONDUIT	TRENCH
203	120.2	4 #6 & 1 #6 GND IN 4" SCH 80 PVC CONDUIT	TRENCH

*SEE NOTE 2

LIGHTING STANDARD SCHEDULE

NO.	CIRCUIT NO.	STATION	OFFSET	ARM	LIGHT STANDARD
72	A	1312+81	64.5 RT.	-	40 FT W/250W HPS OFFSET
73	B	1314+65	64.5 RT.	-	40 FT W/250W HPS OFFSET
74	A	1316+42	64.5 RT.	-	40 FT W/250W HPS OFFSET
75	B	737+48	56.7 LT.	-	*EXIST 40 FT W/250W HPS OFFSET
76	B	1316+53	51.7 LT.	-	40 FT W/250W HPS OFFSET
77	A	740+10	67.7 LT.	-	40 FT W/250W HPS OFFSET
78	A	661+25	72.0 LT.	-	*EXIST 40 FT W/250W HPS OFFSET
79	B	661+33	30.7 RT.	-	40 FT W/250W HPS OFFSET
80	B	-	-	-	*EXIST 40 FT W/250W HPS OFFSET
81	A	-	-	-	*EXIST 40 FT W/250W HPS OFFSET

*SEE NOTE 5

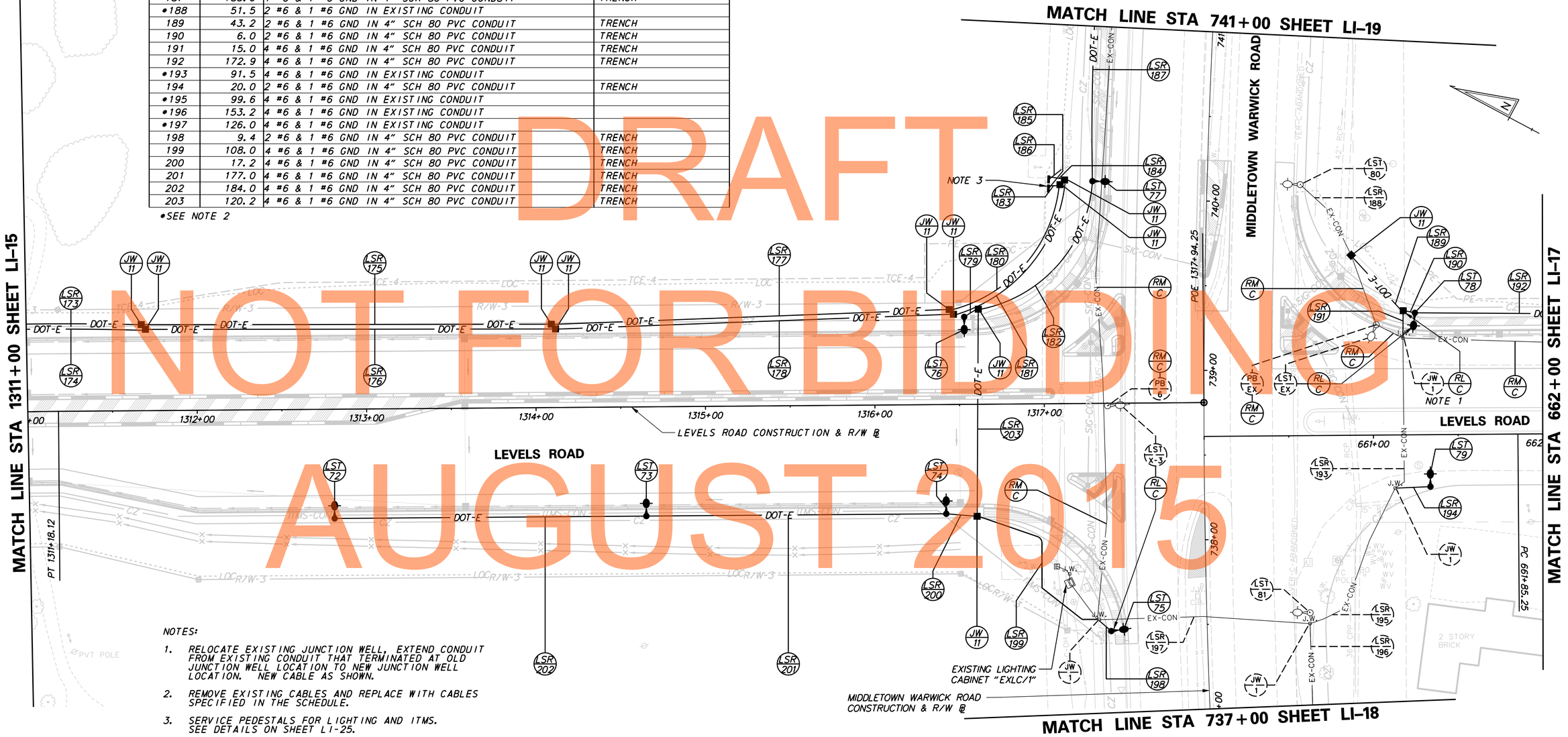

NOTES:

1. RELOCATE EXISTING JUNCTION WELL, EXTEND CONDUIT FROM EXISTING CONDUIT THAT TERMINATED AT OLD JUNCTION WELL LOCATION TO NEW JUNCTION WELL LOCATION. NEW CABLE AS SHOWN.
2. REMOVE EXISTING CABLES AND REPLACE WITH CABLES SPECIFIED IN THE SCHEDULE.
3. SERVICE PEDESTALS FOR LIGHTING AND ITMS. SEE DETAILS ON SHEET LI-25.
4. 4" GALV. CONDUIT TO UTILITY POLE. CONDUITS TO RUN 10' UP POLE. WIRES BY UTILITY COMPANY.
5. REPLACE EXISTING 400W BULB WITH A 250W BULB.

DRAFT
NOT FOR BIDDING
AUGUST 2015

LI-16

DELAWARE DEPARTMENT OF TRANSPORTATION

ADDENDUMS / REVISIONS

SCALE 0 30 60 90 FEET

US 301
MARYLAND STATE LINE
TO LEVELS ROAD

CONTRACT	BRIDGE NO.
T200811301	DESIGNED BY: ML
COUNTY	CHECKED BY: JM
NEW CASTLE	

LIGHTING PLAN

SHEET NO.
681
TOTAL SHTS.
850

J:\2008 PROJECTS\E3X3480\700CADD\750AET\LIGHT\LI_301AET_016.DGN

LIGHTING SERVICE SCHEDULE			
SERVICE RUN	DISTANCE (L.F.)	DESCRIPTION	INSTALLATION
204	175.1	2 #6 & 1 #6 GND IN 4" SCH 80 PVC CONDUIT	TRENCH

LIGHTING STANDARD SCHEDULE					
NO.	CIRCUIT NO.	STATION	OFFSET	ARM	LIGHT STANDARD
82	B	662+96	71.5 LT.	-	*EXIST 40 FT W/250W HPS OFFSET
83	A	664+67	71.5 TL.	-	40 FT W/250W HPS OFFSET

*SEE NOTE 5 ON LI-16

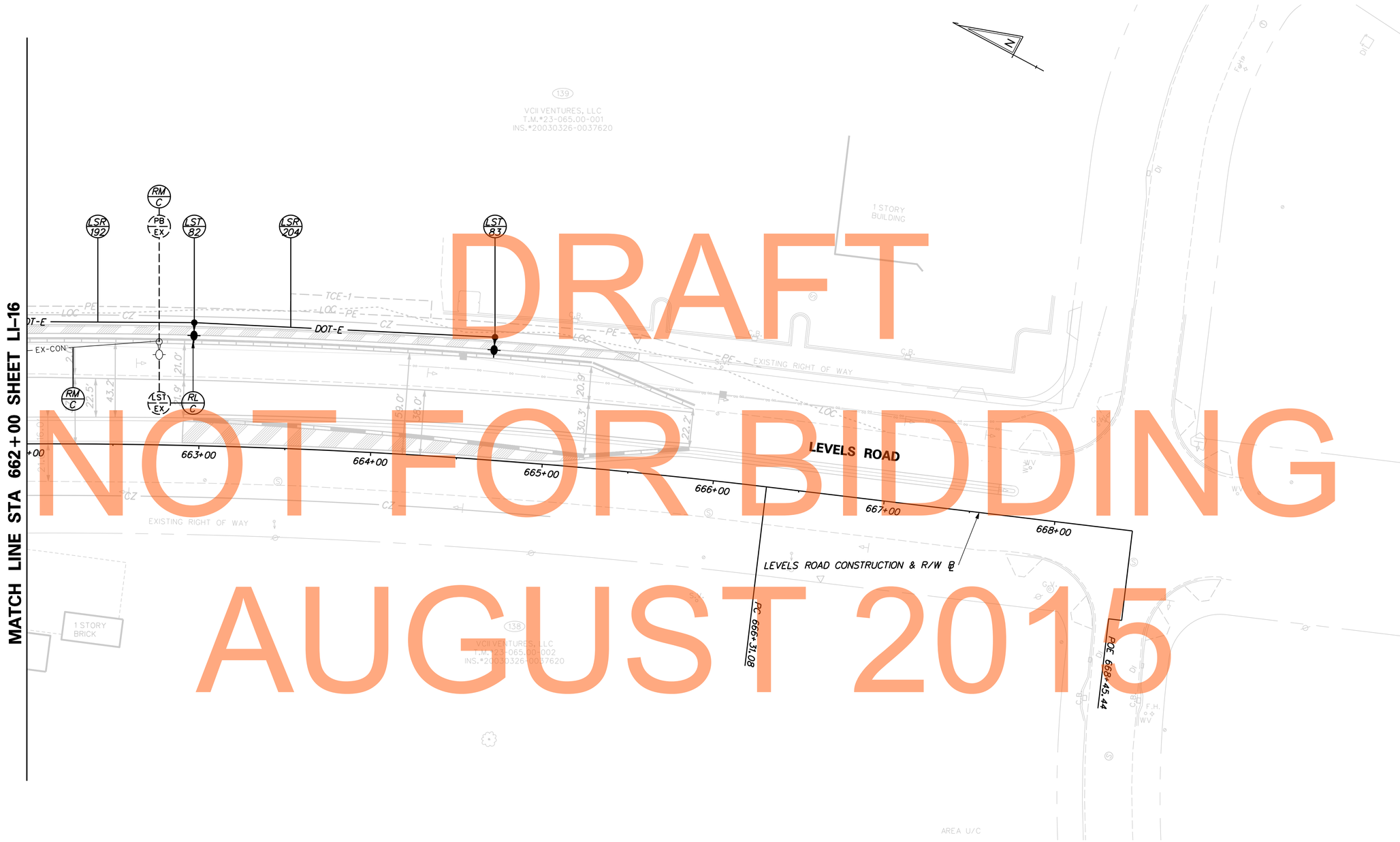

LI-17

DELAWARE DEPARTMENT OF TRANSPORTATION	ADDENDUMS / REVISIONS	SCALE 0 30 60 90 FEET	US 301 MARYLAND STATE LINE TO LEVELS ROAD	CONTRACT T200811301	BRIDGE NO.	LIGHTING PLAN	SHEET NO. 682
				COUNTY NEW CASTLE	DESIGNED BY: ML		TOTAL SHTS. 850
					CHECKED BY: JM		

J:\2008 PROJECTS\E3X34801\700CADD\750AET\LIGHT\LI_301AET_017.DGN

LIGHTING SERVICE SCHEDULE			
SERVICE RUN	DISTANCE (L.F.)	DESCRIPTION	INSTALLATION
205	163.0	2 #6 & 1 #6 GND IN 4" SCH 80 PVC CONDUIT	TRENCH
206	11.8	4 #6 & 1 #6 GND IN 4" SCH 80 PVC CONDUIT	TRENCH

LIGHTING STANDARD SCHEDULE					
NO.	CIRCUIT NO.	STATION	OFFSET	ARM	LIGHT STANDARD
84	A	734+16	60.2 RT.	-	40FT W/250W HPS OFFSET
85	B	735+82	61.7 RT.	-	*EXIST. 40FT W/250W HPS OFFSET

*SEE NOTE 5 ON LI-16

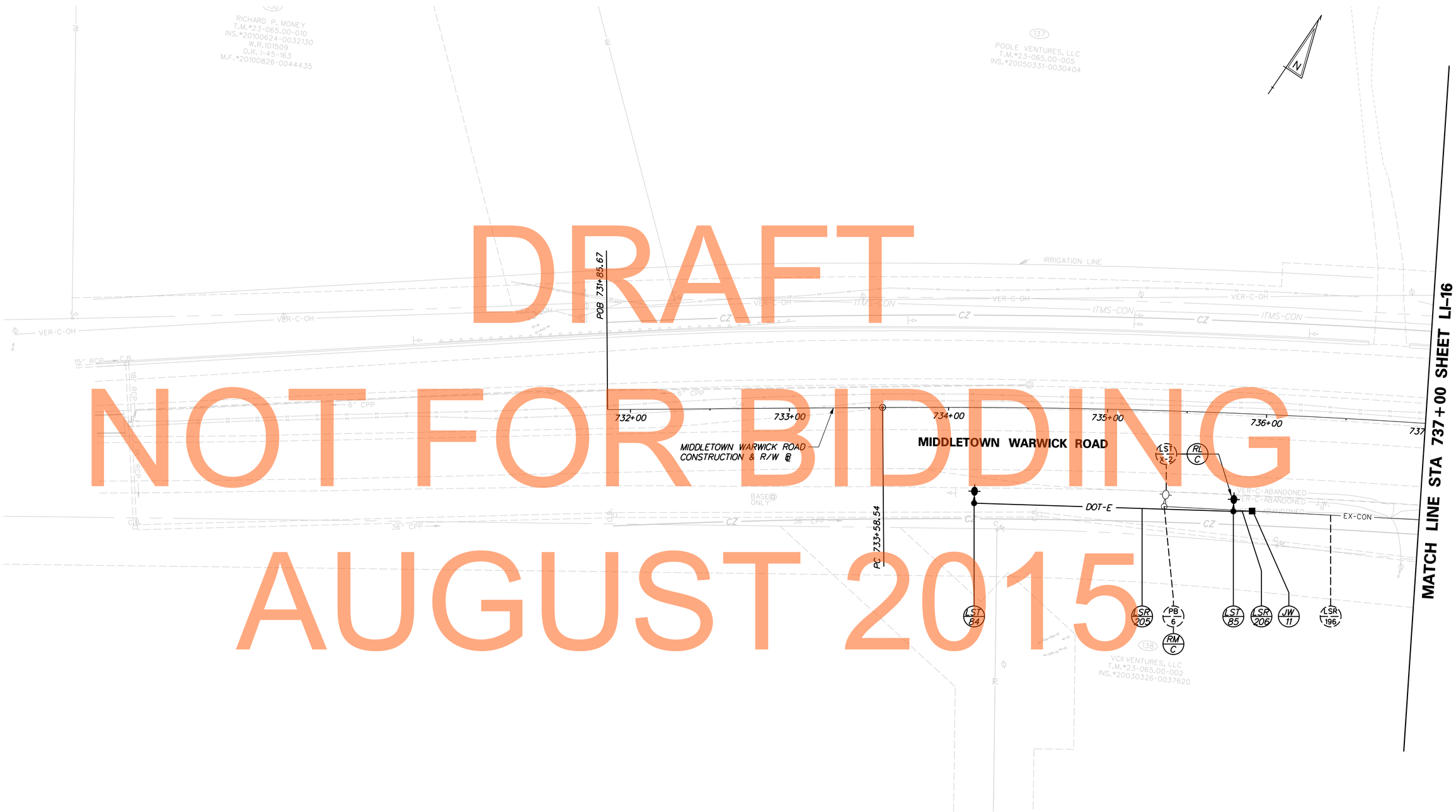

DRAFT
NOT FOR BIDDING
AUGUST 2015

LI-18

DELAWARE DEPARTMENT OF TRANSPORTATION

ADDENDUMS / REVISIONS

SCALE 0 30 60 90 FEET

US 301
MARYLAND STATE LINE
TO LEVELS ROAD

CONTRACT	BRIDGE NO.
T200811301	DESIGNED BY: ML
COUNTY	
NEW CASTLE	CHECKED BY: JM

LIGHTING PLAN

SHEET NO. 683
TOTAL SHTS. 850

J:\2008 PROJECTS\E3X34801\700CADD\750AET\LIGHT\LI_301AET_018.DGN

LIGHTING SERVICE SCHEDULE			
SERVICE RUN	DISTANCE (L.F.)	DESCRIPTION	INSTALLATION
207	177.0	2 #6 & 1 #6 GND IN 4" SCH 80 PVC CONDUIT	TRENCH

LIGHTING STANDARD SCHEDULE					
NO.	CIRCUIT NO.	STATION	OFFSET	ARM	LIGHT STANDARD
86	B	741+91	67.7 LT.	-	*EXIST. 40FT W/250W HPS OFFSET
87	A	743+68	67.7 LT.	-	*EXIST. 40FT W/250W HPS OFFSET

*SEE NOTE 5 ON LI-16

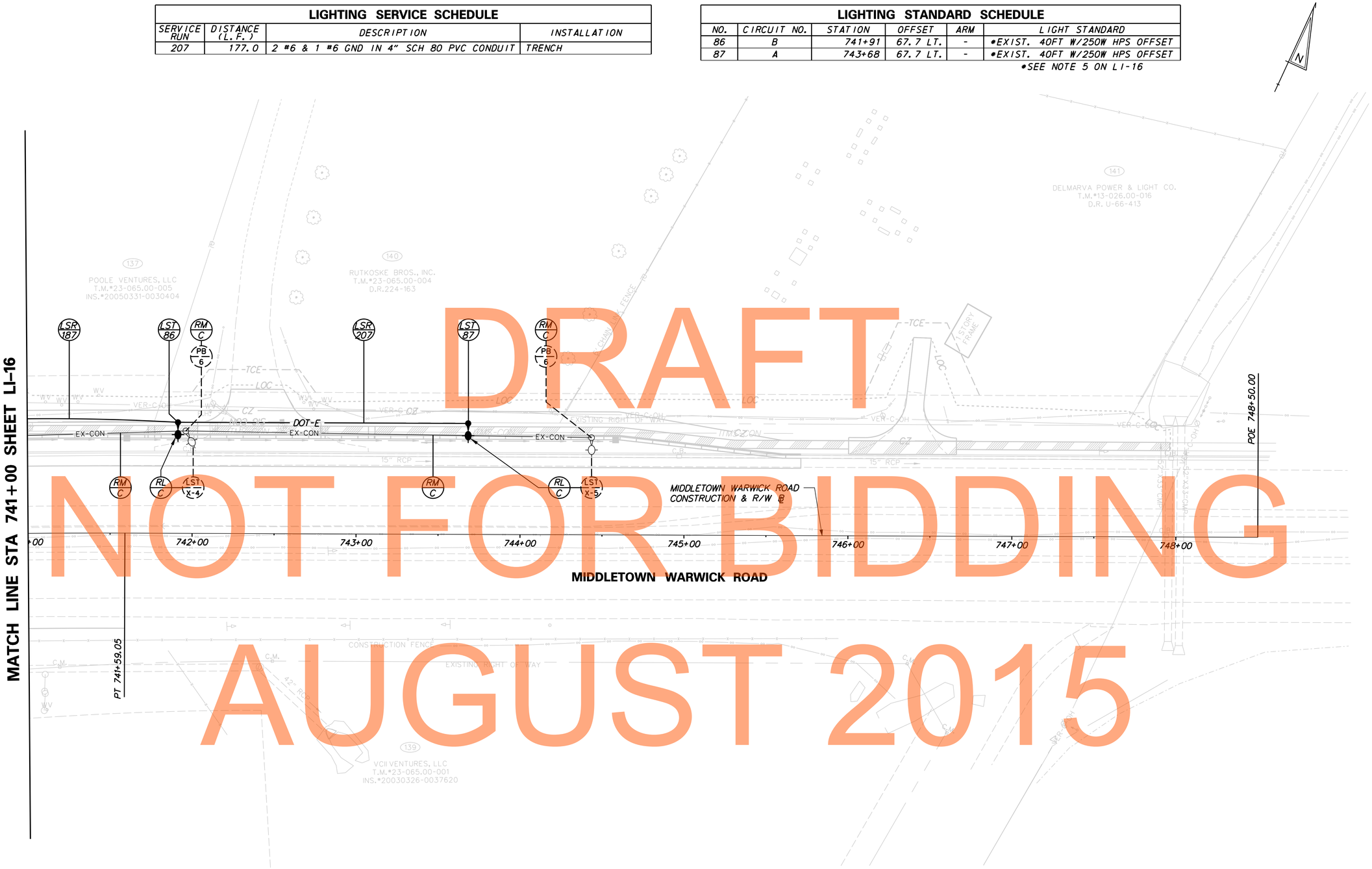

DRAFT
NOT FOR BIDDING
AUGUST 2015

J:\2008 PROJECTS\E3X3480\700CADD\750AET\LIGHT\LI_301AET_019.DGN

LI-19

DELAWARE DEPARTMENT OF TRANSPORTATION

ADDENDUMS / REVISIONS

SCALE 0 30 60 90 FEET

US 301 MARYLAND STATE LINE TO LEVELS ROAD

CONTRACT	BRIDGE NO.	
T200811301	DESIGNED BY: ML	
COUNTY		
NEW CASTLE	CHECKED BY: JM	

LIGHTING PLAN

SHEET NO.
684
TOTAL SHTS.
850

NOTE:

1. ALL LUMINAIRE CIRCUITS SHALL USE # 2 AWG TO FUSE CONNECTORS IN POLE TRANSFORMER BASES.
2. B-6, B-7, B-8, B-9 & C-11 ARE NOT SHOWN ON PLANS.
3. LST-25, LST-26 & LST-27 ARE TO BE CONNECTED UNDER CONTRACT T200911303.

LEGEND

- CONDUIT JUCTION WELL
- 250W HPS LUMINAIRE,240V
- TO BE REMOVED

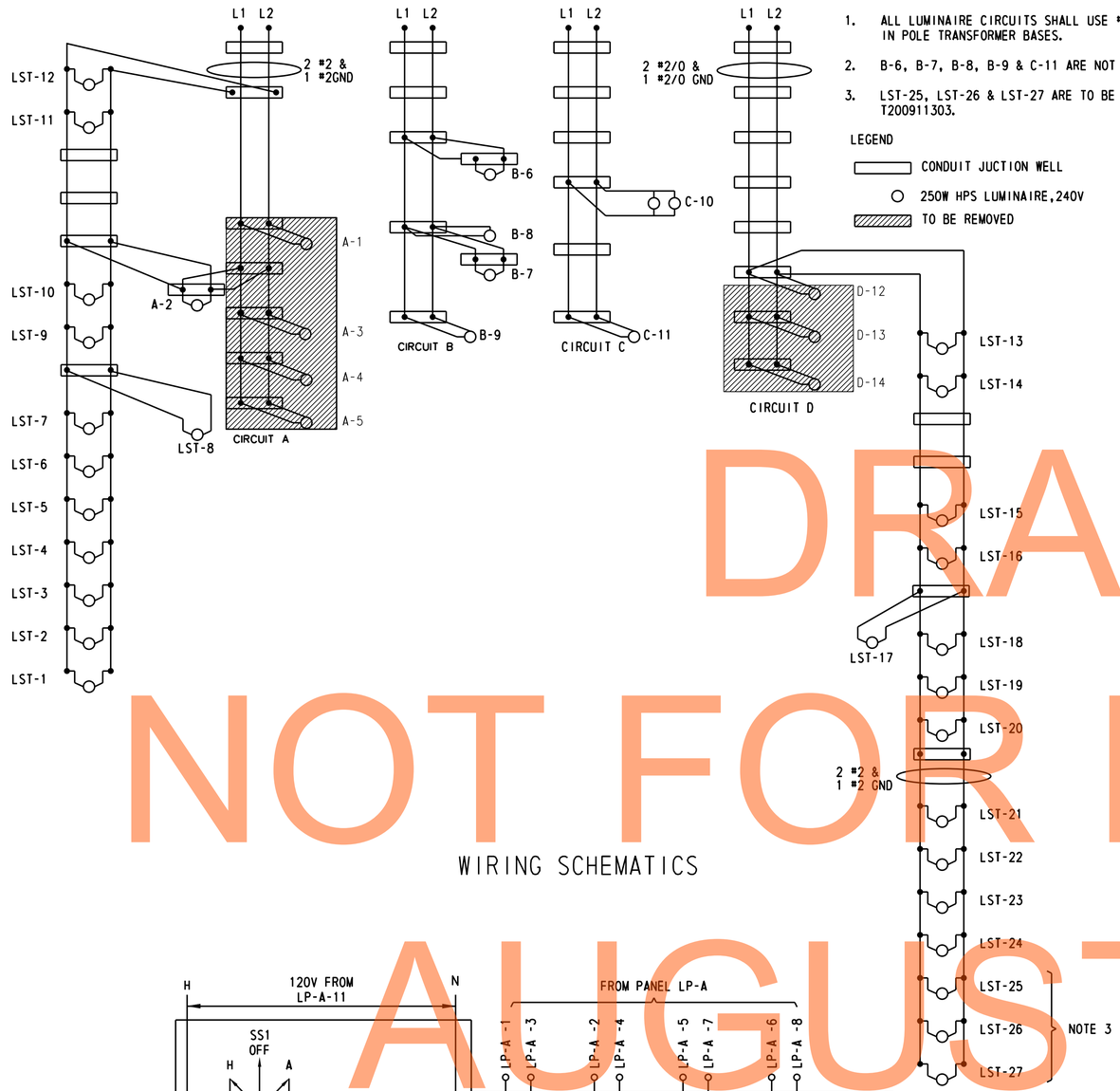

WIRING SCHEMATICS

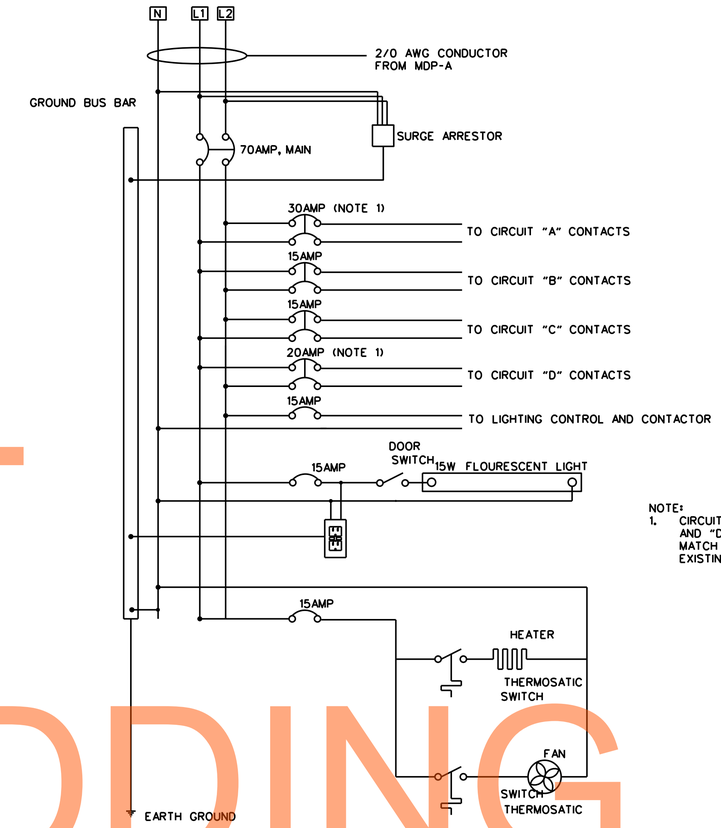

NOTE:
1. CIRCUIT BREAKERS FOR CIRCUIT "A" AND "D" ARE NEW AND ARE TO MATCH TYPE NEEDED FOR EXISTING PANEL.

PANEL WIRING DIAGRAM

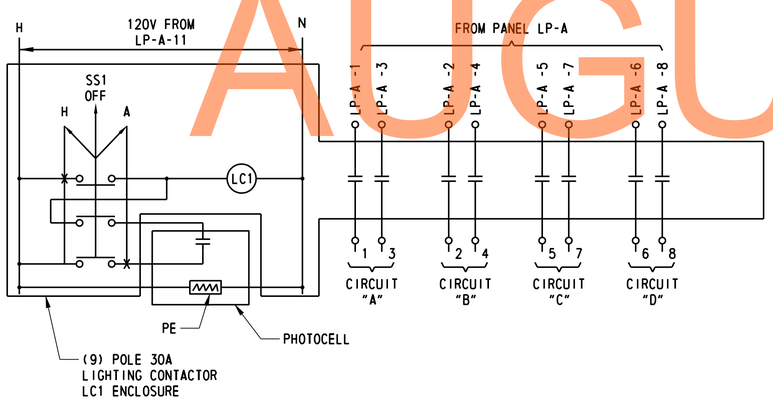

LIGHTING CONTROL DIAGRAM

PANEL DESIGNATION LP-A	TYPE: SINGLE PHASE 3W NUMBER OF POLES: 20 GROUND BUS RATING: 100% MAIN BUS RATING: 100A MAIN RATING: 70A 2P MCB	LOCATION: SOUTH SIDE OF WEIGH STATION BLDG. VOLTAGE: 120/240 PANEL MOUNTING: SURFACE PANEL ENCLOSURE (NEMA): TYPE 3R PANEL MIN. A.I.C. RATING: 10KA

CIR. NO.	CIR. BKR.	DESCRIPTION	LOAD/PHASE LOAD	L1	L2	LOAD	DESCRIPTION	CIR. BKR.	CIR. NO.
1	30A	CIRCUIT "A"	2015	2635		620	CIRCUIT "B"	15A	2
3			2015		2635	620			4
5	15A	CIRCUIT "C"	465	2790		2325	CIRCUIT "D"	20A	6
7			465		2790	2325			8
9	15A	FAN AND HEATER	720	915		195	RECEPTACLE & LIGHT	15A	10
11	15A	PHOTO CONTROL & CONTACTOR	600		600		SPARE	15A	12
13		SPACE					SPACE		14
15		SPACE					SPACE		16
				6340	6025				
		TOTAL CONNECTED VA LOAD		12,365					

100% SOLID NEUTRAL BUS
CU EQUIPMENT GROUND BUS

EXISTING PANEL SCHEDULE

LI-20

DRAFT
NOT FOR BIDDING
AUGUST 2015

DELAWARE DEPARTMENT OF TRANSPORTATION

ADDENDUMS / REVISIONS

NOT TO SCALE

US 301
MARYLAND STATE LINE
TO LEVELS ROAD

CONTRACT	BRIDGE NO.	
T200811301	DESIGNED BY: ML	
COUNTY		
NEW CASTLE	CHECKED BY: JM	

LIGHTING DETAILS
WEIGH STATION RAMPS

SHEET NO. 685
TOTAL SHTS. 850

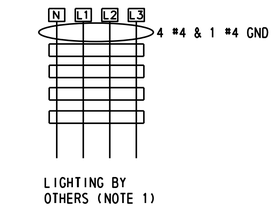

CIRCUIT NB-A

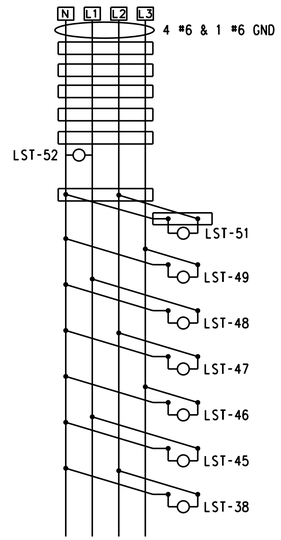

CIRCUIT NB-B

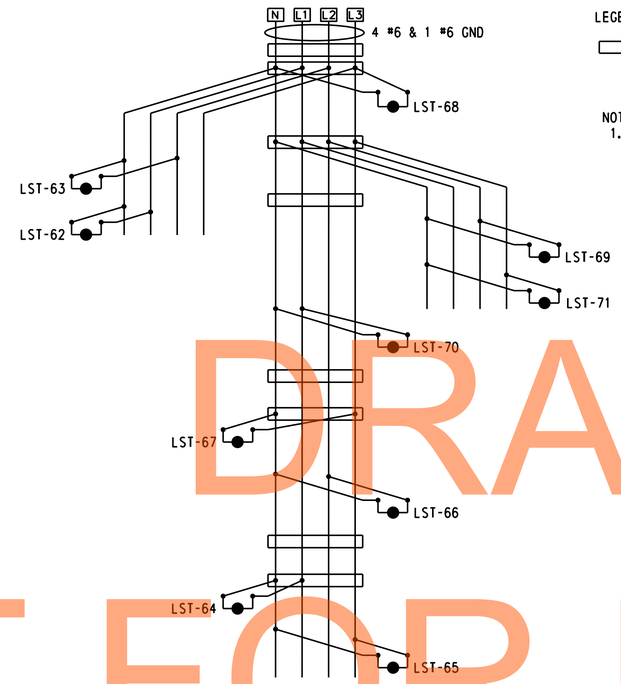

CIRCUIT NB-C

LEGEND

CONDUIT JUCTION WELL

250W HPS LUMINAIRE,277V
150W HPS LUMINAIRE,277V

NOTE:
1. THERE ARE 1-150W LUMINAIRES AND 11-250W LUMINAIRES ON RAMP C.(BY OTHERS)

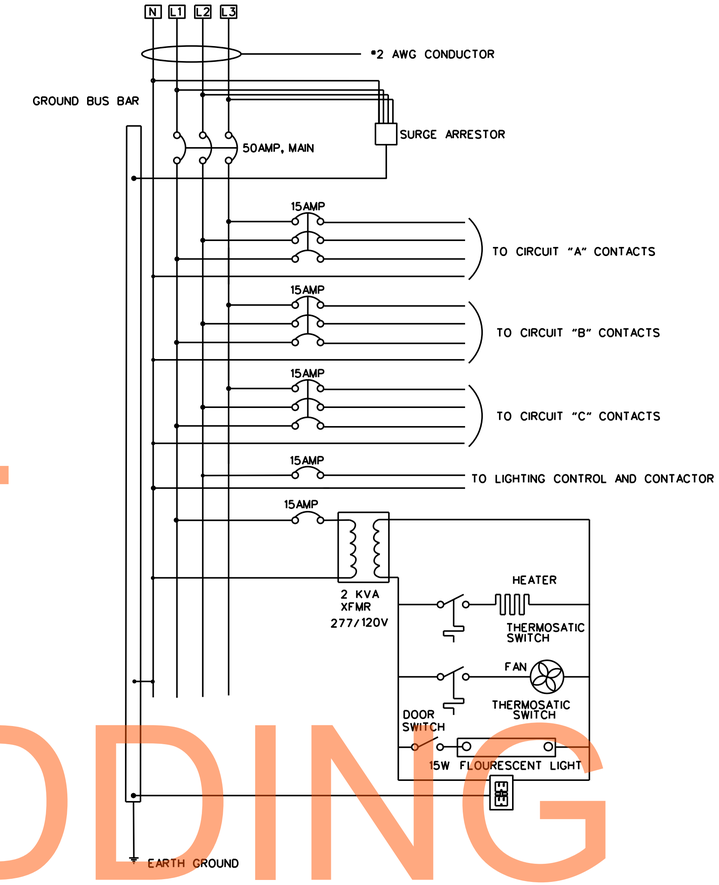

PANEL WIRING DIAGRAM

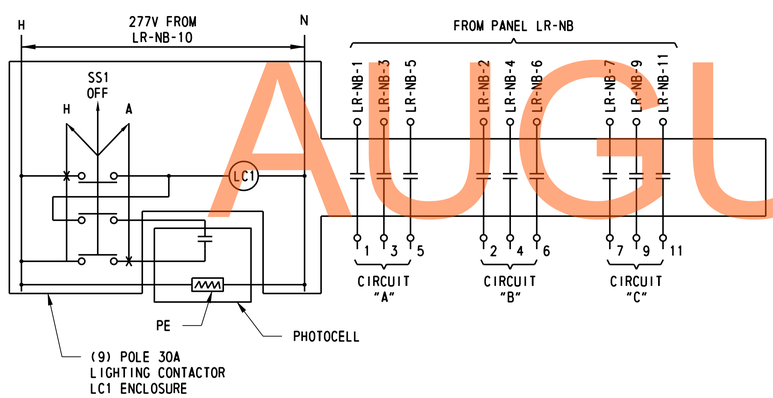

LIGHTING CONTROL DIAGRAM

PANEL DESIGNATION	TYPE: THREE PHASE 4W NUMBER OF POLES: 20 GROUND BUS RATING: 100% MAIN BUS RATING: 100A MAIN RATING: 50A 3P MCB	LOCATION: LEVELS ROAD WITH RAMP D VOLTAGE: 277/480 VAC PANEL MOUNTING: PAD PANEL ENCLOSURE (NEMA): TYPE 3R PANEL MIN. A.I.C. RATING: 10KA
LR-NB		

CIR. NO.	CIR. BKR.	DESCRIPTION	LOAD/PHASE LOAD	L1	L2	L3	LOAD	DESCRIPTION	CIR. BKR.	CIR. NO.
1	15A	CIRCUIT "NB-A" (RAMP C)	1120	2050			930	CIRCUIT "NB-B" (RAMP D)	15A	2
3			1240		2170		930			4
5			1240			1860	620			6
7	15A	CIRCUIT "NB-C" (INTERSECTION)	570	2570			2000	2 KVA XFMR	15A	8
9			570		1170		600	PHOTO CONTROL & CONTACTOR	15A	10
11			760			760		SPARE	15A	12
				4620	3340	2620				
		TOTAL CONNECTED VA LOAD		10,580						

100% SOLID NEUTRAL BUS
CU EQUIPMENT GROUND BUS

PANEL SCHEDULE

LEVELS ROAD INTERCHANGE- NORTHBOUND RAMPS

DRAFT
NOT FOR BIDDING
AUGUST 2015

LI-21

DELAWARE DEPARTMENT OF TRANSPORTATION	ADDENDUMS / REVISIONS	NOT TO SCALE	US 301 MARYLAND STATE LINE TO LEVELS ROAD	CONTRACT T200811301	BRIDGE NO.	LIGHTING DETAILS LEVELS ROAD INTERCHANGE	SHEET NO. 686
				COUNTY NEW CASTLE	DESIGNED BY: ML		TOTAL SHTS. 850
					CHECKED BY: JM		

J:\2008 PROJECTS\E3X3480\700CADD\750AET\LIGHT\LI_301AET_021.DGN

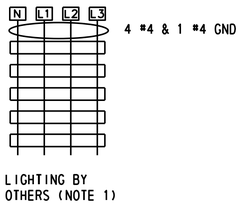

CIRCUIT SB-A

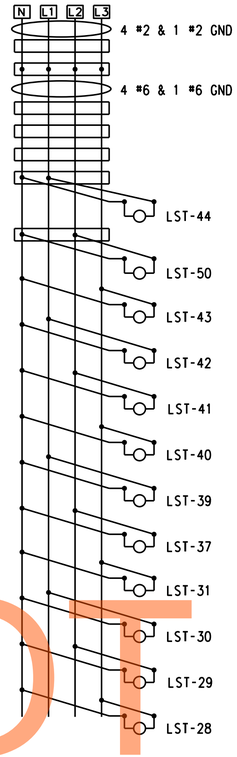

CIRCUIT SB-B

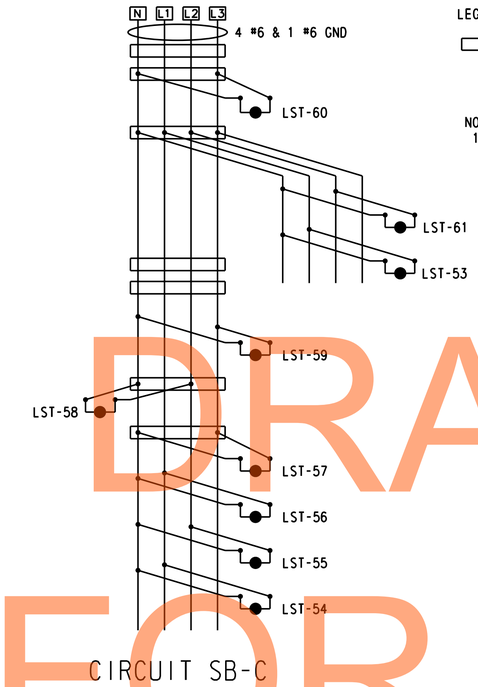

CIRCUIT SB-C

LEGEND

CONDUIT JUCTION WELL

250W HPS LUMINAIRE,277V
150W HPS LUMINAIRE,277V

NOTE:
1. THERE ARE 2-150W LUMINAIRES AND 9-250W LUMINAIRES ON RAMP F.(BY OTHERS)

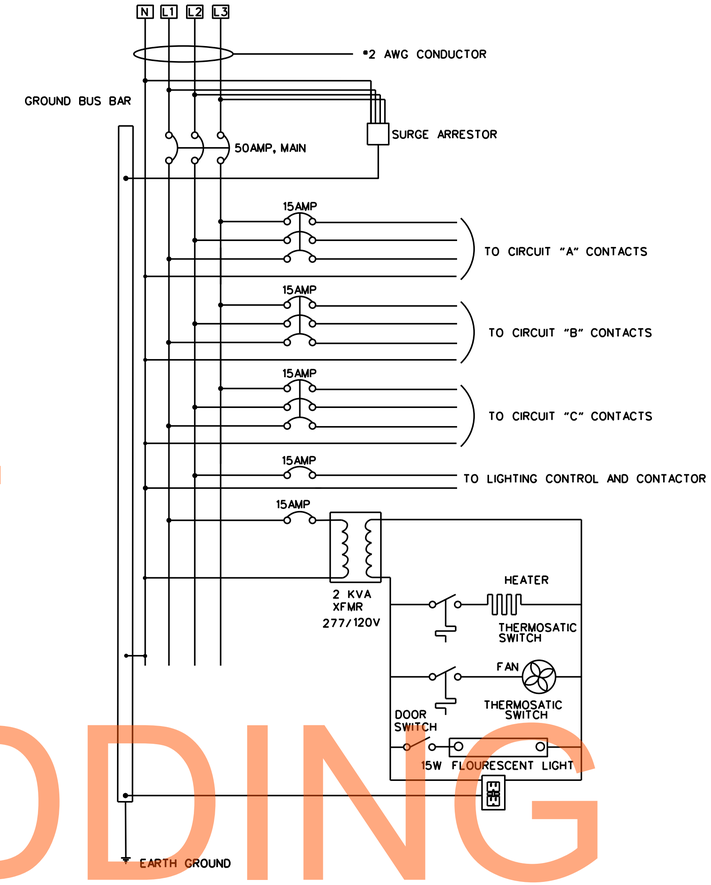

PANEL WIRING DIAGRAM

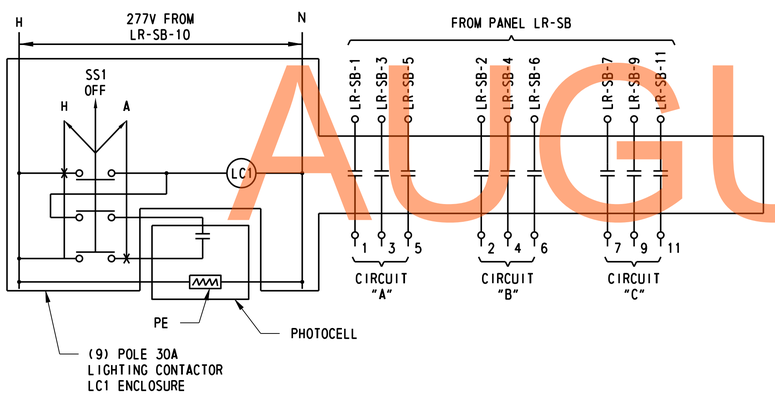

LIGHTING CONTROL DIAGRAM

PANEL DESIGNATION: LR-SB

TYPE: THREE PHASE 4W
NUMBER OF POLES: 20
GROUND BUS RATING: 100%
MAIN BUS RATING: 100A
MAIN RATING: 50A 3P MCB

LOCATION: LEVELS ROAD WITH RAMP E
VOLTAGE: 277/480 VAC
PANEL MOUNTING: PAD
PANEL ENCLOSURE (NEMA): TYPE 3R
PANEL MIN. A.I.C. RATING: 10KA

CIR. NO.	CIR. BKR.	DESCRIPTION	LOAD/PHASE LOAD	L1	L2	L3	LOAD	DESCRIPTION	CIR. BKR.	CIR. NO.
1	15A	CIRCUIT "SB-A" (RAMP F)	1120	2360			1240	CIRCUIT "SB-B" (RAMP E)	15A	2
3			1120		2360		1240			4
5			930			2170	1240			6
7	15A	CIRCUIT "SB-C" (INTERSECTION)	570	2570			2000	2KVA XFMR	15A	8
9			570		1170		600	PHOTO CONTROL & CONTACTOR	15A	10
11			570			570		SPARE	15A	12
				4930	3530	2740				
		TOTAL CONNECTED VA LOAD		11,200						

CU EQUIPMENT GROUND BUS
100% SOLID NEUTRAL BUS

PANEL SCHEDULE

LEVELS ROAD INTERCHANGE- SOUTHBOUND RAMPS

DRAFT
NOT FOR BIDDING
AUGUST 2015

LI-22

J:\2008 PROJECTS\E3X34801\700CADD\750AET\LIGHT\LI_301AET_022.DGN

DELAWARE DEPARTMENT OF TRANSPORTATION	ADDENDUMS / REVISIONS	NOT TO SCALE	US 301 MARYLAND STATE LINE TO LEVELS ROAD	CONTRACT T200811301 / COUNTY NEW CASTLE	BRIDGE NO. / DESIGNED BY: ML / CHECKED BY: JM	LIGHTING DETAILS LEVELS ROAD INTERCHANGE

SHEET NO. 687
TOTAL SHTS. 850

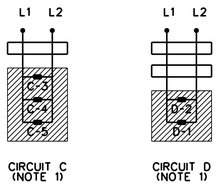

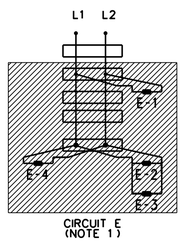

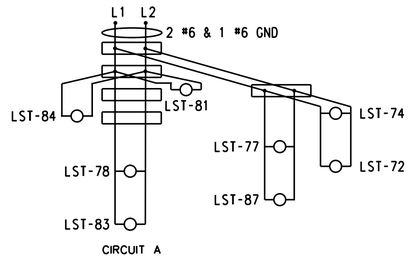

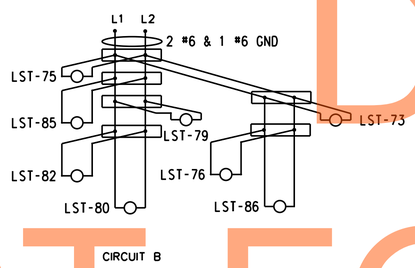

LEGEND

- CONDUIT JUCTION WELL
- 400W HPS LUMINAIRE,240V
- 250W HPS LUMINAIRE,240V
- TO BE REMOVED

NOTES:

1. SEE PLANS FOR NEW POLE NUMBERS AND LUMINAIRES. EXISTING CIRCUITS C,D,& E TO BE REMOVED FROM PANEL BOARD AND PANEL BOARD TO BE RELABELED AS SHOWN BELOW IN EXISTING PANEL SCHEDULE.

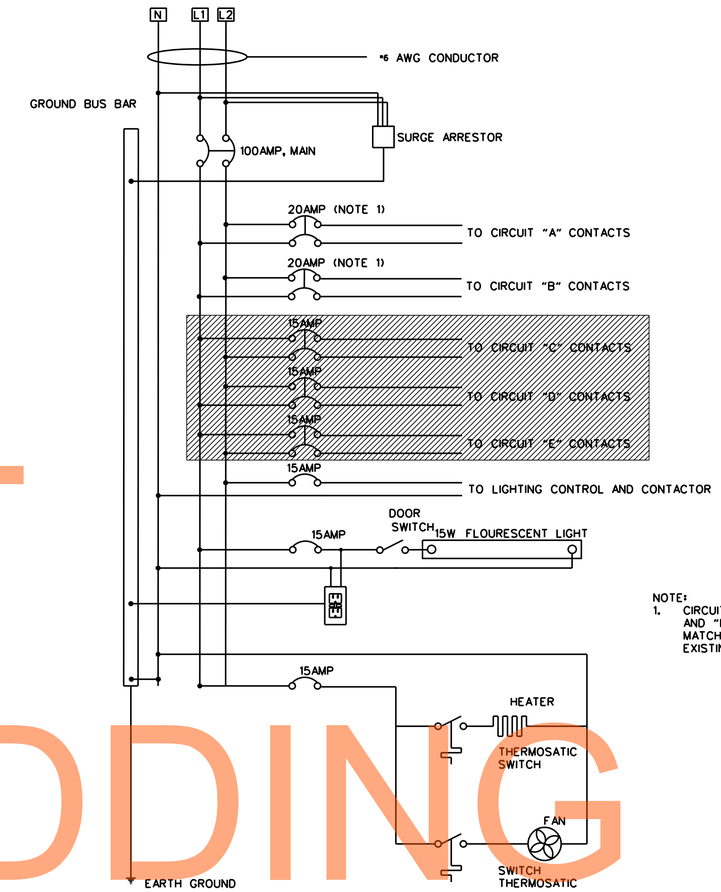

NOTE:
1. CIRCUIT BREAKERS FOR CIRCUIT "A" AND "B" ARE NEW AND ARE TO MATCH TYPE NEEDED FOR EXISTING PANEL.

PANEL WIRING DIAGRAM

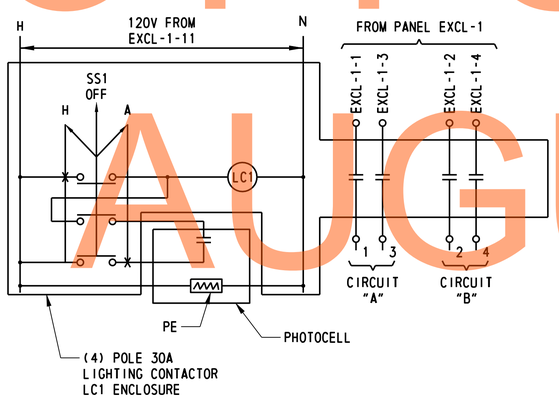

LIGHTING CONTROL DIAGRAM

PANEL DESIGNATION	TYPE: SINGLE PHASE 9W NUMBER OF POLES: - GROUND BUS RATING: 100% MAIN BUS RATING: 100A MAIN RATING: 100A 2P MCB	LOCATION: LEVELS ROAD WITH MIDDLETOWN WARWICK ROAD VOLTAGE: 120/240VAC PANEL MOUNTING: PAD PANEL ENCLOSURE (NEMA): TYPE 3R PANEL MIN. A.I.C. RATING: 10KA
EXLC-1		

CIR. NO.	CIR. BKR.	DESCRIPTION	LOAD/PHASE LOAD	L1	L2	LOAD	DESCRIPTION	CIR. BKR.	CIR. NO.
1	20A	CIRCUIT "A"	1240	2480		1240	CIRCUIT "B"	20A	2
3			1240		2480	1240			4
5									6
7									8
9	15A	FAN AND HEATER	720	915		195	RECEPTACLE & LIGHT	15A	10
11	15A	PHOTO CONTROL & CONTACTOR	600		600				12
				3395	3080				
		TOTAL CONNECTED VA LOAD		6475					

100% SOLID NEUTRAL BUS
CU EQUIPMENT GROUND BUS

EXISTING PANEL SCHEDULE

DRAFT
NOT FOR BIDDING
AUGUST 2015

LI-23

DELAWARE DEPARTMENT OF TRANSPORTATION	ADDENDUMS / REVISIONS	NOT TO SCALE	US 301 MARYLAND STATE LINE TO LEVELS ROAD	CONTRACT T200811301	BRIDGE NO.	LIGHTING DETAILS LEVELS ROAD AT WARWICK MIDDLETOWN ROAD	SHEET NO. 688
				COUNTY NEW CASTLE	DESIGNED BY: ML		TOTAL SHTS. 850
					CHECKED BY: JM		

J:\2008 PROJECTS\E3X3480I\700CADD\750AET\LIGHT\LI_301AET_023.DGN

NOTES:

1. CONDUIT BUSHINGS SHALL BE USED AT EACH END OF EVERY CONDUIT TO PREVENT CABLE DAMAGE.
2. CONNECTOR/FUSE KITS WILL BE INCIDENTAL TO THE PROVISION OF THE CONDUCTORS.
3. ALL LUMINAIRES WILL HAVE STANDARD 2" TENON MOUNTING.
4. INSULATION ON LIGHTING CONDUCTORS SHALL BE DIFFERENT COLORS, L1 CONDUCTOR SHALL BE BLACK, AND L2 CONDUCTOR SHALL BE RED.

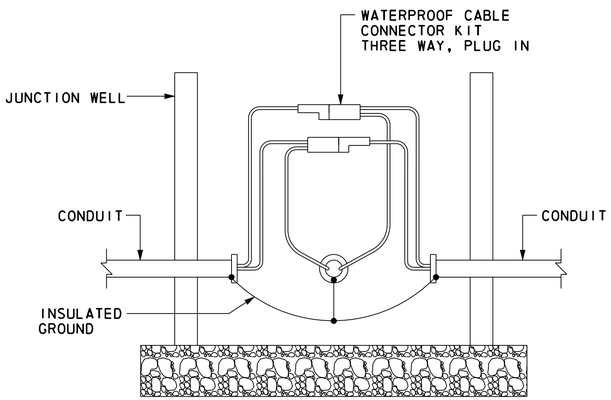

THREEWAY SPLICE
NOT TO SCALE

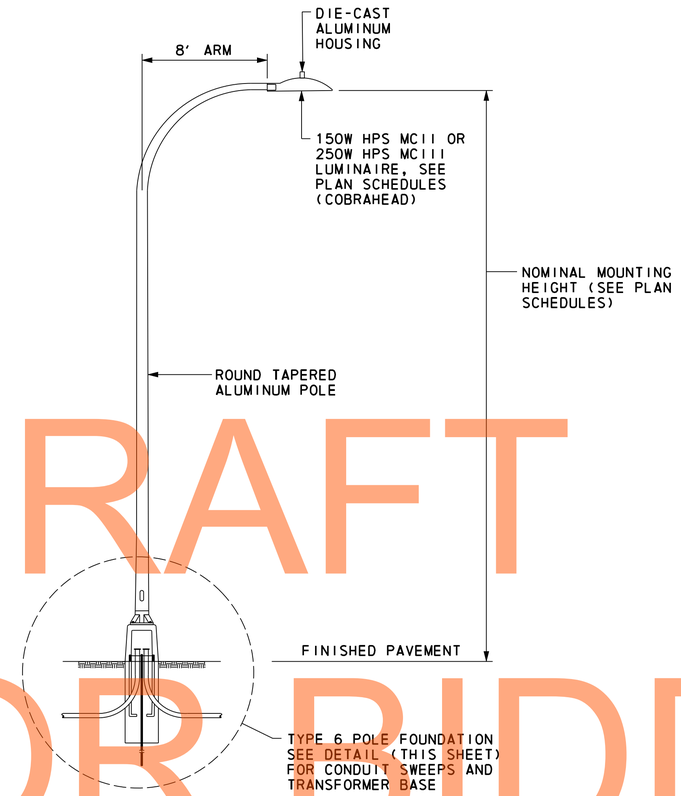

TYPICAL LIGHT STANDARD WITH SINGLE DAVIT ARM
NOT TO SCALE

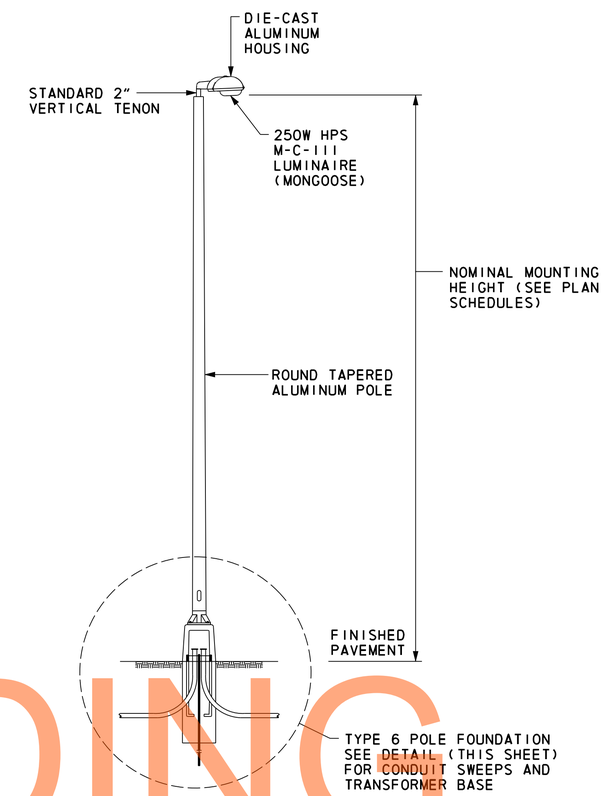

TYPICAL LIGHT STANDARD
NOT TO SCALE

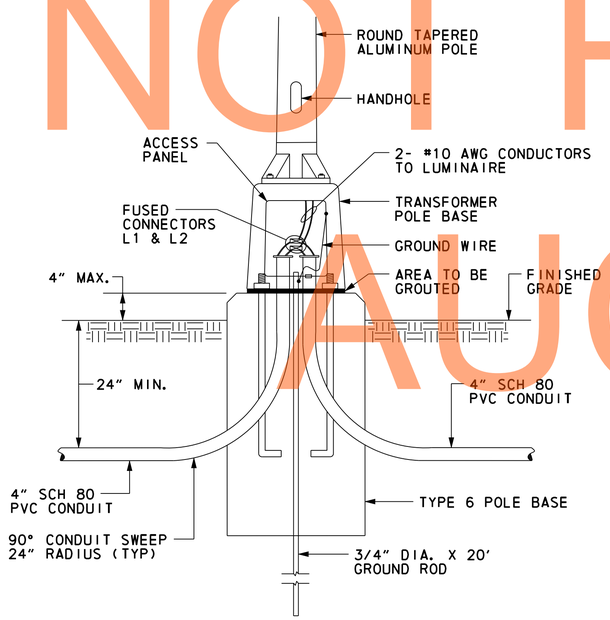

TYPICAL LIGHT POLE FOUNDATION
NOT TO SCALE

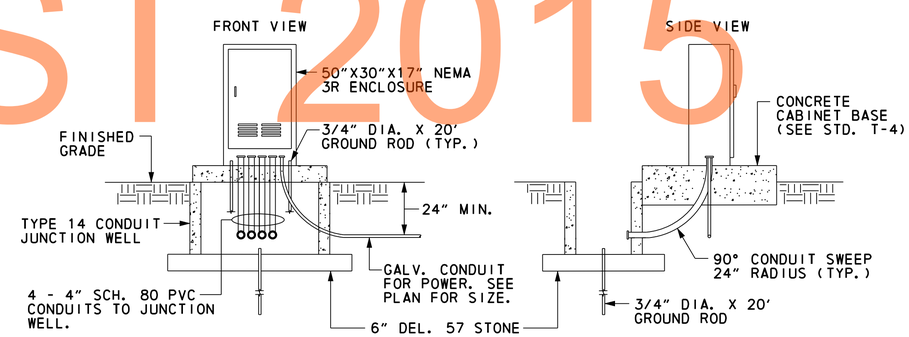

LIGHTING AND EQUIPMENT ENCLOSURE
NOT TO SCALE

DRAFT
NOT FOR BIDDING
AUGUST 2015

LI-24

DELAWARE DEPARTMENT OF TRANSPORTATION	ADDENDUMS / REVISIONS	NOT TO SCALE	US 301 MARYLAND STATE LINE TO LEVELS ROAD	CONTRACT T200811301	BRIDGE NO.	LIGHTING DETAILS	SHEET NO. 689
				COUNTY NEW CASTLE	DESIGNED BY: ML		TOTAL SHTS. 850
					CHECKED BY: M		

J:\8 PROJECTS\E3X34801\700CADD\702ROAD\LIGHT\LI_301DS3_027.DGN

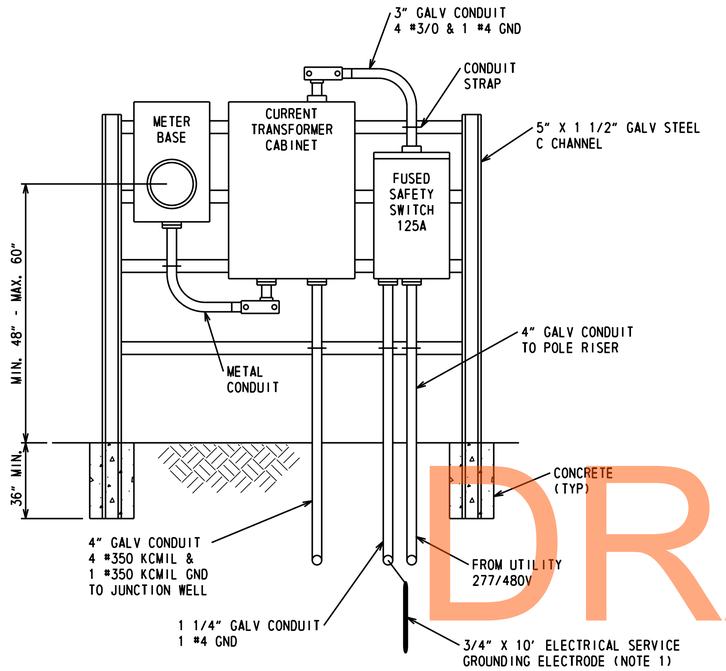

SERVICE FOR ITMS, SIGNAL, AND TOLL BOOTHS

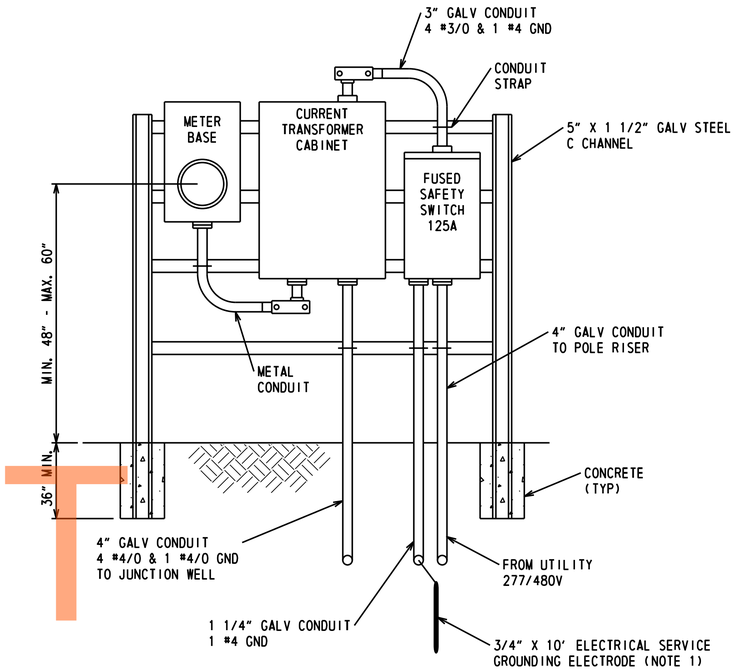

SERVICE FOR LIGHTING

NOTES:

1. IF THE RESISTANCE TO EARTH IS GREATER THAN 25 OHMS, THAN A SECOND ELECTRODE SHALL BE ADDED (NEC 2011 250.53.A.2 EXCEPTION).
2. SEE PLANS FOR LOCATION WHERE WIRES ARE REDUCED IN SIZE BASED ON VOLTAGE DROP.

PANEL DESIGNATION	TYPE: THREE PHASE 4W NUMBER OF POLES: 20 GROUND BUS RATING: 100% MAIN BUS RATING: 100A MAIN RATING: 100A 3P MCB	LOCATION: RAMP D INTERSECTION VOLTAGE: 277/480 VAC PANEL MOUNTING: PAD PANEL ENCLOSURE (NEMA): TYPE 3R PANEL MIN. A.I.C. RATING: 10KA
ITMS		

CIR. NO.	CIR. BKR.	DESCRIPTION	LOAD/PHASE LOAD	L1	L2	L3	LOAD	DESCRIPTION	CIR. BKR.	CIR. NO.
1	15A	SPARE		500			500	CCTV @ 1291+50	15A	2
3	15A	SPARE			3000		3000	RWIS @ 255+50	20A	4
5	15A	TRAFFIC SIGNAL INTERSECTION E	1500			3000	1500	TRAFFIC SIGNAL INTERSECTION D	15A	6
7	80A	TOLL BOOTHS	17,334	17,334				SPARE	15A	8
9			17,333		18,053		720	FAN AND HEATER	15A	10
11			17,333			17,333		SPARE	15A	12
				17,834	21,053	20,333				
TOTAL CONNECTED VA LOAD				59,220						

NOTE: REFER TO ITMS PLANS FOR CONNECTION TO LOADS

100% SOLID NEUTRAL BUS
CU EQUIPMENT GROUND BUS

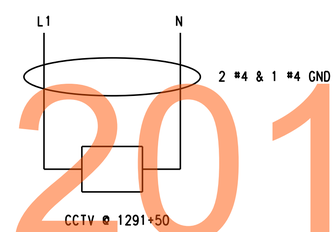

CIRCUIT NO. 2

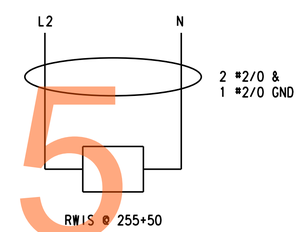

CIRCUIT NO. 4

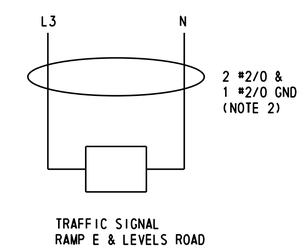

CIRCUIT NO. 5

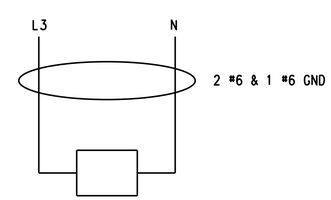

CIRCUIT NO. 6

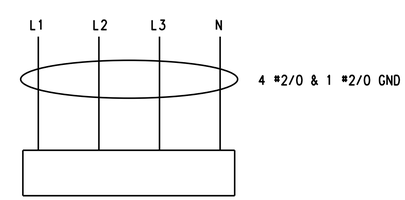

CIRCUIT NO. 7, 9, & 11

DRAFT
NOT FOR BIDDING
AUGUST 2015

LI-25

DELAWARE DEPARTMENT OF TRANSPORTATION

ADDENDUMS / REVISIONS

NOT TO SCALE

US 301
MARYLAND STATE LINE
TO LEVELS ROAD

CONTRACT	BRIDGE NO.
T200811301	DESIGNED BY: ML
COUNTY	
NEW CASTLE	CHECKED BY: JM

LIGHTING DETAILS
UTILITY SERVICES
AND ITMS PANEL

SHEET NO. 690
TOTAL SHTS. 850

J:\2008 PROJECTS\E3X3480\700CADD\750AET\LIGHT\LI_301AET_025.DGN